Operating Manual

AMAZONE

UF 1602 UF 2002

Mounted field sprayer

MG6013
BAG0184.3 08.19
Printed in Germany

Please read this operating manual before commissioning. Keep it in a safe place for future use.

en

Reading the instruction

Manual and following it should seem to be inconvenient and superfluous as it is not enough to hear from others and to realize that a machine is good, to buy it and to believe that now everything should work by itself. The person in question would not only harm himself but also make the mistake of blaming the machine for possible failures instead of himself. In order to ensure success one should enter the mind of a thing, make himself familiar with every part of the machine and get acquainted with how it's handled. Only in this way could you be satisfied both with the machine and with yourself. This goal is the purpose of this instruction manual.

Leipzig-Plagwitz 1872.

Identification data

Manufacturer:	AMAZONEN-WERKE H. DREYER GmbH & Co. KG
Machine ID no.:	
Tye	UF02
Permissible system pressure (bar)	Maximum 10 bar
Year of manufacture:	
Factory:	
Basic weight (kg):	
Permissible total weight (kg):	
Maximum load (kg):	

Manufacturer's address

AMAZONEN-WERKE
H. DREYER GmbH & Co. KG
Postfach 51
D-49202 Hasbergen, Germany
Tel.: + 49 (0)5405 501-0
E-mail: amazone@amazone.de

Spare part orders

Spare parts lists are freely accessible in the spare parts portal at www.amazone.de.

Please send orders to your AMAZONE dealer.

Formalities of the operating manual

Document number: MG6013

Compilation date: 08.19

© Copyright AMAZONEN-WERKE H. DREYER GmbH & Co. KG, 2019

All rights reserved.

Reprinting, even of extracts, is only possible with the approval of AMAZONEN-WERKE H. DREYER GmbH & Co. KG.

This operating manual is valid for all versions of the implement.

All of the equipment is described without indicating it as special optional equipment.

A description may be provided for equipment that is not fitted on the implement or is only available in certain markets. The sales documents provide information on the equipment of your implement or consult your dealer for more detailed information.

All information in this operating manual corresponds to the state of knowledge at the time of publication. Due to ongoing development of the implement, deviations are possible between the implement and the information in this operating manual.

No claims can be made based on differences in the specifications, figures or descriptions.

Figures serve as a reference and are to be understood as representations of the principle.

If you want to sell the implement, ensure that the operating manual is supplied with the implement.

Foreword

Dear Customer,

You have chosen one of the quality products from the wide product range of AMAZONEN-WERKE, H. DREYER GmbH & Co. KG. We thank you for your confidence in our products.

On receiving the machine, check to see if it has been damaged during transport or if parts are missing. Using the delivery note, check that the machine has been delivered in full, including any special equipment ordered. Damage can only be rectified if problems are signalled immediately.

Before commissioning, read and understand this operating manual, and particularly the safety information. Only after careful reading will you be able to benefit from the full scope of your newly purchased machine.

Please ensure that all the machine operators have read this operating manual before the machine is commissioned.

Should you have any questions or problems, please consult this operating manual or contact your local service partner.

Regular maintenance and timely replacement of worn or damaged parts increases the lifespan of your machine.

User evaluation

Dear Reader,

We update our operating manuals regularly. Your suggestions for improvement help us to create ever more user-friendly manuals.

AMAZONEN-WERKE

H. DREYER GmbH & Co. KG

Postfach 51

D-49202 Hasbergen, Germany

Tel.: + 49 (0)5405 501-0

E-mail: amazone@amazone.de

1 User Information ... 10
1.1 Purpose of the document ... 10
1.2 Locations in the operating manual ... 10
1.3 Diagrams ... 10

2 General safety instructions ... 11
2.1 Obligations and liability ... 11
2.2 Representation of safety symbols ... 13
2.3 Organisational measures ... 14
2.4 Safety and protection equipment ... 14
2.5 Informal safety measures ... 14
2.6 User training ... 15
2.7 Safety measures in normal operation ... 16
2.8 Danger from residual energy ... 16
2.9 Maintenance and repair work, fault elimination ... 16
2.10 Design changes ... 16
2.10.1 Spare and wear parts and aids ... 17
2.11 Cleaning and disposal ... 17
2.12 User workstation ... 17
2.13 Warning symbols and other signs on the machine ... 18
2.13.1 Positions of warning symbols and other labels ... 19
2.14 Dangers if the safety information is not observed ... 27
2.15 Safety-conscious working ... 27
2.16 Safety information for users ... 28
2.16.1 General safety and accident prevention information ... 28
2.16.2 Hydraulic system ... 31
2.16.3 Electrical system ... 32
2.16.4 Universal joint shaft operation ... 32
2.16.5 Field sprayer operation ... 34
2.16.6 Cleaning, maintenance and repairs ... 35

3 Loading and unloading ... 36

4 Product description ... 37
4.1 Overview of the assemblies ... 37
4.2 Safety and protection equipment ... 39
4.3 Supply hoses between the tractor and the machine ... 40
4.4 Transportation equipment ... 40
4.5 Intended use ... 41
4.6 Device inspections ... 42
4.7 Consequences of using certain crop protection agents ... 42
4.8 Danger areas and danger points ... 43
4.9 Rating plate and CE mark ... 44
4.10 Conformity ... 44
4.11 Technically possible maximum application rate ... 44
4.12 Maximum permissible application rate ... 45
4.13 Technical Data ... 46
4.13.1 Basic machine ... 46
4.13.2 Spraying technology ... 47
4.13.3 Technical Residue ... 48
4.13.4 Weights of basic implement and equipment ... 50
4.14 Required tractor equipment ... 51
4.15 Noise emissions data ... 51

5 Construction and function of the basic machine 52

5.1 Function 52
5.2 Control panel 54
5.2.1 Induction bowl with injector and canister flushing 58
5.2.2 Switch taps on the induction bowl 59
5.3 Parking supports 60
5.4 Three-point attachment frame 61
5.5 Quick-coupling system 61
5.6 PTO shaft 62
5.6.1 Coupling the PTO shaft 64
5.6.2 Uncoupling the PTO shaft 65
5.7 Hydraulic connections 66
5.7.1 Coupling the hydraulic hose lines 67
5.7.2 Uncoupling the hydraulic hose lines 68
5.8 Operating terminal or manual operation 69
5.8.1 Control terminal 69
5.8.2 AMASPRAY+ 70
5.8.3 AMASET+ 70
5.9 AmaPilot / AmaPilot+ multi-function stick 71
5.10 Spray liquid tank 72
5.10.1 Step 72
5.10.2 Suction port for filling the spray liquid tank (optional) 73
5.11 Spülwassertank 74
5.12 Hand wash facility 75
5.13 Pump equipment 76
5.14 Filter equipment 77
5.14.1 Filling sieve 77
5.14.2 Suction filter 77
5.14.3 Self cleaning pressure filter 78
5.14.4 Nozzle filters 78
5.15 Exterior wash down kit (optional) 79
5.16 Transport box 79
5.17 Work lights 80
5.18 **FT 1001** front tank 80
5.19 Camera system 81

6 Construction and function of the sprayer boom 82

6.1 Super-S boom 86
6.1.1 Spacer 87
6.1.2 Unlocking and locking the transport safety catch 88
6.1.3 **Super-S** boom, folding via the tractor control unit 89
6.2 Reduction joint on the outer boom (optional) 91
6.3 Boom width reduction (option) 92
6.4 Boom extension (option) 93
6.5 Hydraulic tilt adjustment (optional) 94
6.6 Distance Control 94
6.7 Spray lines 95
6.8 Nozzles 97
6.8.1 Multiple nozzles 97
6.8.2 Edge nozzles 100
6.9 Automatic single nozzle control (optional) 101
6.9.1 Single nozzle control AmaSwitch 101
6.10 Special optional equipment for liquid fertiliser 102
6.10.1 Three-ray nozzles 102
6.10.2 7 hole nozzles / FD- nozzles 103
6.10.3 Drag hose unit for liquid fertiliser (optional) 104

7 Commissioning ... 105

7.1 Checking the suitability of the tractor ... 106
7.1.1 Calculating the actual values for the total tractor weight, tractor axle loads and tyre load capacities, as well as the minimum ballast ... 106
7.2 Installing the PTO shaft ... 110
7.3 Adjusting the length of the PTO shaft to the tractor ... 111
7.4 Securing the tractor / machine against unintentional start-up and rolling ... 113
7.5 Adjusting the hydraulic system with the system setting screw ... 114

8 Coupling and uncoupling the machine ... 116

8.1 Coupling the machine ... 116
8.1.1 Coupling implements with quick coupling system ... 119
8.2 Uncoupling the machine ... 121
8.2.1 Uncoupling implements with quick coupling system ... 122

9 Transportation ... 123

10 Using the machine ... 125

10.1 Preparing for spraying operation ... 128
10.2 Preparing the spray liquid ... 129
10.2.1 Calculating the filling and re-fill quantity ... 133
10.2.2 Filling table for remaining spray area ... 134
10.3 Filling the spray liquid tank via the filling opening ... 135
10.3.1 Filling the spray liquid tank through the filling opening ... 135
10.3.2 Filling the spray liquid tank via the suction port ... 136
10.3.3 Filling the spray liquid tank through the pressure connection ... 139
10.4 Flushing in the agents ... 140
10.5 Filling the flushing water tank through the pressure connection ... 142
10.6 Spraying operation ... 143
10.6.1 Applying the spray liquid ... 145
10.6.2 Driving to the field with the agitator switched on ... 146
10.6.3 Drift reduction measures ... 147
10.6.4 Diluting the spray liquid with flushing water ... 147
10.6.5 Continual internal cleaning ... 148
10.7 Residues ... 149
10.7.1 Spraying out the diluted residual quantity at the end of spraying operations ... 150
10.7.2 Emptying the spray liquid tank using the pump ... 150

11 Cleaning the implement after operation ... 151

11.1 Quick cleaning of the empty field sprayer ... 152
11.2 Intensive cleaning of the sprayer during a critical agent change ... 153
11.3 Draining the final residual quantities ... 154
11.4 Performing chemical cleaning. ... 155
11.5 Cleaning the suction filter ... 156
11.6 Cleaning the pressure filter ... 157
11.7 Cleaning the sprayer when the spray liquid tank is full (work interruption) ... 159
11.8 External cleaning ... 160

12 Faults ... 161

13 Cleaning, maintenance and repairs ... 162

13.1 Cleaning ... 164
13.2 Winter storage and long periods out of operation ... 165
13.3 Lubrication instructions ... 167
13.4 Securing the raised boom ... 167
13.5 Maintenance schedule – overview ... 168
13.6 Hydraulic system ... 170

13.6.1 Labelling of hydraulic hose lines 171
13.6.2 Maintenance intervals 171
13.6.3 Inspection criteria for hydraulic hose lines 171
13.6.4 Installing and removing hydraulic hose lines 172
13.6.5 Fluid filter 173
13.6.6 Cleaning the solenoid valves 173
13.6.7 Clean / exchange the filter in the hydraulic plug 174
13.7 Adjusting the hydraulic throttle valve 175
13.7.1 Super-S boom 175
13.8 Adjustments on the folded-out sprayer boom 177
13.9 Pump 178
13.9.1 Checking the oil level 178
13.9.2 Changing the oil 178
13.9.3 Checking and replacing the suction and pressure-side valves 179
13.9.4 Checking and replacing piston diaphragms (workshop work) 180
13.10 Metering the field sprayer 182
13.11 Nozzles 184
13.12 Line filter 185
13.13 Instructions on testing the field sprayer 186
13.14 Upper and lower link pins 187
13.15 Screw tightening torques 188
13.16 Disposing of the field sprayer 189
14 Liquid circuit 190
15 Spray table 191
15.1 Spray tables for flat-fan, anti-drift, injector and airmix nozzles, spraying height 50 cm 191
15.2 Spraying nozzles for liquid manure 195
15.2.1 Spray table for three-ray nozzles, spraying height 120 cm 195
15.3 Spray table for 7-hole nozzles 196
15.3.1 Spray table for FD- nozzles 198
15.4 Spray table for drag hose unit 199
15.5 Conversion table for spraying ammonium nitrate / urea solution (AUS) liquid fertiliser 202

1 User Information

The User Information section provides information on use of the operating manual.

1.1 Purpose of the document

This operating manual

- describes the operation and maintenance of the machine.
- provides important information on safe and efficient handling of the machine.
- is a component part of the machine and should always be kept with the machine or the towing vehicle.
- Keep it in a safe place for future use.

1.2 Locations in the operating manual

All the directions specified in the operating manual are always seen in the direction of travel.

1.3 Diagrams

Instructions and responses

Activities to be carried out by the user are given as numbered instructions. Always keep to the order of the instructions. The response to an instruction is given by an arrow. Example:

1. Instruction 1

→ Machine response to instruction 1

2. Instruction 2

Lists

Lists without an essential order are shown as a list with bullets. Example:

- Point 1
- Point 2

Item numbers in diagrams

Numbers in round brackets refer to the item numbers in the diagrams. The first number refers to the diagram and the second number to the item.

Example: (6) = Item 6

2 General safety instructions

This section contains important information on safe operation of the machine.

2.1 Obligations and liability

Comply with the instructions in the operating manual

Knowledge of the basic safety information and safety regulations is a basic requirement for safe handling and fault-free machine operation.

Obligations of the operator

The operator is obliged only to let those people work with/on the machine who

- are aware of the basic workplace safety information and accident prevention regulations.
- have been instructed in working with/on the machine.
- have read and understood this operating manual.

The operator is obliged

- to keep all the warning symbols on the machine in a legible state.
- to replace damaged warning symbols.
- If you still have queries, please contact the manufacturer.

Obligations of the user

Before starting work, anyone charged with working with/on the machine is obliged

- to comply with the basic workplace safety instructions and accident prevention regulations.
- to read and follow the "General safety information" section of this operating manual.
- to read the section "Warning symbols and other labels on the machine" (page 18) of this operating manual and to follow the safety instructions represented by the warning symbols when operating the machine.
- to get to know the machine.
- to read the sections of this operating manual that are important for carrying out their work.

If the user discovers that a function is not working properly, then they must eliminate this fault immediately. If this is not the task of the user or if the user does not possess the appropriate technical knowledge, then they should report this fault to their superior (operator).

Risks in handling the machine

The machine has been constructed to the state-of-the art and the recognised rules of safety. However, operating the machine may cause risks and restrictions to

- the health and safety of the user or third parties,
- the machine,
- other property.

Only use the machine

- for the purpose for which it was intended.
- in a perfect state of repair.

Eliminate any faults immediately which could impair safety.

Guarantee and liability

Our "General conditions of sales and delivery" are always applicable. These shall be available to the operator, at the latest on conclusion of the contract. Guarantee and liability claims for damage to people or property will be excluded if they can be traced back to one or more of the following causes:

- Improper use of the machine.
- Improper installation, commissioning, operation and maintenance of the machine.
- Operation of the machine with defective safety equipment or improperly attached or non-functioning safety equipment.
- Non-compliance with the instructions in the operating manual regarding commissioning, operation and maintenance.
- Unauthorised design changes to the machine.
- Insufficient monitoring of machine parts which are subject to wear.
- Improperly executed repairs.
- Disasters through the impact of foreign bodies and Acts of God.

2.2 Representation of safety symbols

Safety instructions are indicated by the triangular safety symbol and the highlighted signal word. The signal word (DANGER, WARNING, CAUTION) describes the gravity of the risk and has the following significance:

DANGER

Indicates an immediate high risk which will result in death or serious physical injury (loss of body parts or long term damage) if not avoided.

If the instructions are not followed, then this will result in immediate death or serious physical injury.

WARNING

Indicates a medium risk, which could result in death or (serious) physical injury if not avoided.

If the instructions are not followed, then this may result in death or serious physical injury.

CAUTION

Indicates a low risk which could cause minor or medium level physical injury or damage to property if not avoided.

IMPORTANT

Indicates an obligation to special behaviour or an activity required for proper machine handling.

Non-compliance with these instructions can cause faults on the machine or disturbance to the environment.

NOTE

Indicates handling tips and particularly useful information.

These instructions will help you to use all the functions of your machine in the best way possible.

2.3 Organisational measures

The operator must provide the necessary personal protective equipment as per the information provided by the manufacturer of the crop protection agent to be used, such as:

- Chemical-resistant gloves,
- Chemical-resistant overalls,
- Water-resistant footwear,
- A face mask,
- Breathing protection,
- Safety glasses;
- Skin protection agents, etc.

The operating manual

- **must always be kept at the place at which the machine is operated.**
- **must always be easily accessible for the user and maintenance personnel.**

Check all safety equipment regularly.

2.4 Safety and protection equipment

Before starting up the machine each time, all the safety and protection equipment must be properly attached and fully functional. Check all safety and protection equipment regularly.

Faulty safety equipment

Faulty or disassembled safety and protection equipment can lead to dangerous situations.

2.5 Informal safety measures

As well as all the safety information in this operating manual, comply with the general, national regulations pertaining to accident prevention and environmental protection.

When driving on public roads and routes you should comply with the statutory road traffic regulations.

2.6 User training

Only those people who have been trained and instructed may work with/on the machine. The operator must clearly specify the responsibilities of the people charged with operation and maintenance work.

People being trained may only work with/on the machine under the supervision of an experienced person.

Activity \ Person	Person specially trained for the activity[1)]	Trained operator[2)]	Person with specialist training (specialist workshop*)[3)]
Loading/Transport	X	X	X
Commissioning	--	X	--
Set-up, tool installation	--	--	X
Operation	--	X	--
Maintenance	--	--	X
Troubleshooting and fault elimination	X	--	X
Disposal	X	--	--
Legend:	X..permitted	--..not permitted	

1) A person who can assume a specific task and who can carry out this task for an appropriately qualified company.

2) Instructed persons are those who have been instructed in their assigned tasks and in the possible risks in the case of improper behaviour, have been trained if necessary, and have been informed about the necessary protective equipment and measures.

3) People with specialist technical training shall be considered as a specialist. Due to their specialist training and their knowledge of the appropriate regulations, they can evaluate the work with which they have been charged and detect possible dangers.

Comment:

A qualification equivalent to specialist training can be obtained from several years' experience in the relevant field.

If maintenance and repair work on the machine is additionally marked "Workshop work", only a specialist workshop may carry out such work. The personnel of a specialist workshop shall possess the appropriate knowledge and suitable aids (tools, lifting and support equipment) for carrying out the maintenance and repair work on the machine in a way which is both appropriate and safe.

2.7 Safety measures in normal operation

Only operate the machine if all the safety and protection equipment is fully functional.

Check the machine at least once a day for visible damage and check the function of the safety and protection equipment.

2.8 Danger from residual energy

Note that there may be residual mechanical, hydraulic, pneumatic and electrical/electronic energy on the machine.

Use appropriate measures to inform the operating personnel. You can find detailed information in the relevant sections of this operating manual.

2.9 Maintenance and repair work, fault elimination

Carry out prescribed setting, maintenance and inspection work in good time.

Secure all media such as compressed air and the hydraulic system against unintentional start-up.

Carefully fix and secure larger assemblies to lifting gear when carrying out replacement work.

Regularly check that bolted connections are firmly secured and tighten if necessary.

When the maintenance work is completed, check the function of the safety devices

2.10 Design changes

You may make no changes, expansions or modifications to the machine without the authorisation of AMAZONEN-WERKE. This also applies when welding support parts.

Any expansion or modification work shall require the written approval of AMAZONEN-WERKE. Only use modification and accessory parts approved by AMAZONEN-WERKE so that the type approval, for example, remains valid in accordance with national and international regulations.

Vehicles with an official type approval or with equipment connected to a vehicle with a valid type approval or approval for road transport according to the German road traffic regulations must be in the state specified by the approval.

WARNING

Risk of crushing, cutting, catching, being drawn in or impact from the failure of support parts.

It is strictly forbidden to

- drill holes in the frame or on the running gear.
- increase the size of existing holes on the frame or the running gear.
- weld support parts.

2.10.1 Spare and wear parts and aids

Immediately replace any machine parts which are not in a perfect state.

Only use genuine AMAZONE spare and wear parts or those approved by AMAZONEN-WERKE so that the type approval remains valid according to the national and international regulations. The use of spare and wear parts from third parties does not guarantee that they have been constructed in a way as to meet the requirements placed on them.

AMAZONEN-WERKE shall accept no liability for damage caused by the use of non-approved spare and wear parts or aids.

2.11 Cleaning and disposal

Handle and dispose of any materials used carefully, in particular

- when carrying out work on lubrication systems and equipment and
- when cleaning using solvents.

2.12 User workstation

The machine may only be operated by one person sitting in the driver's seat of the tractor.

2.13 Warning symbols and other signs on the machine

Always keep all the warning symbols on the machine clean and in a legible state. Replace illegible warning symbols. You can obtain the warning symbols from your dealer using the order number (e.g. MD 075).

Warning symbols - structure

Warning symbols indicate danger areas on the machine and warn against residual dangers. At these points, there are permanent or unexpected dangers.

A warning symbol consists of two fields:

Field 1

is a symbol describing the danger, surrounded by triangular safety symbol.

Field 2

is a symbol showing how to avoid the danger.

Warning symbols - explanation

The column **Order number and explanation** provides an explanation of the neighbouring warning symbol. The description of the warning symbols is always the same and specifies, in the following order:

1. A description of the danger.

   For example: risk of cutting

2. The consequence of non-compliance with the risk avoidance instructions.

   For example: causes serious injuries to fingers or hands.

3. Risk avoidance instructions.

   For example: only touch machine parts when they have come to a complete standstill.

2.13.1 Positions of warning symbols and other labels

Warning symbols

The following diagrams show the arrangement of the warning symbols on the machine.

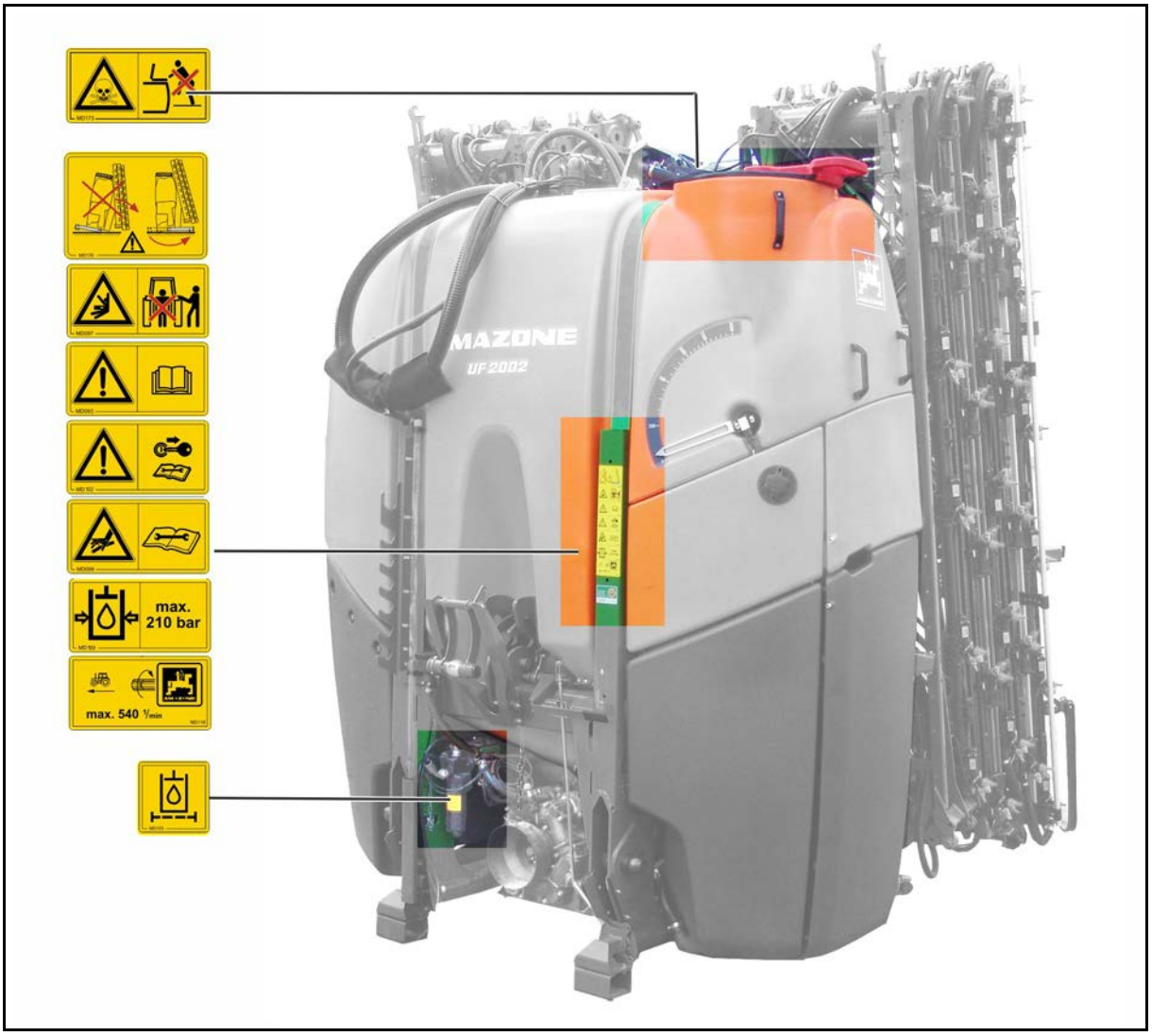

Super-S- boom

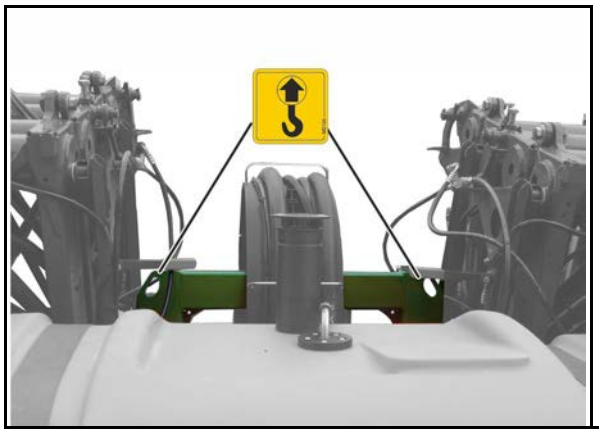

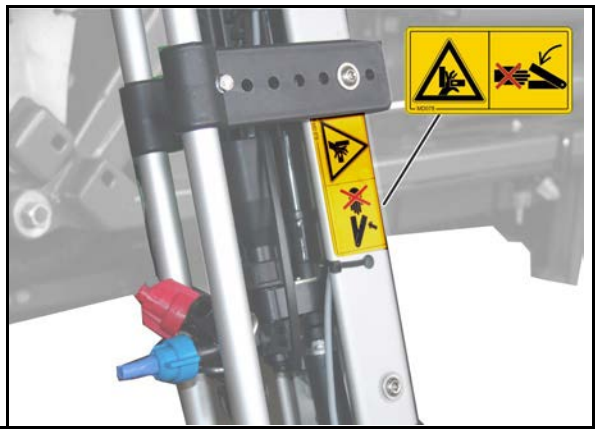

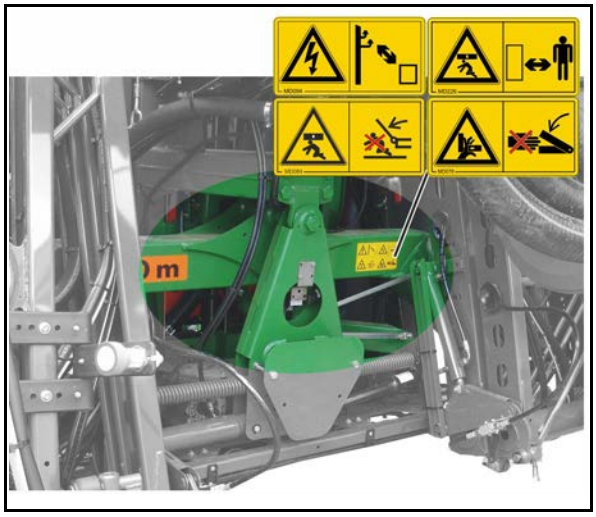

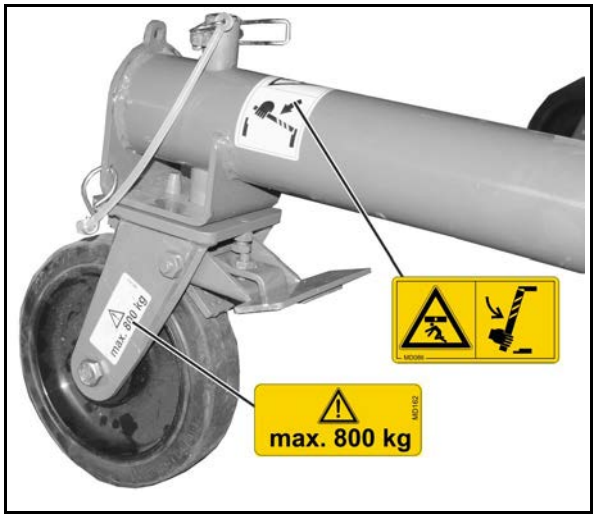

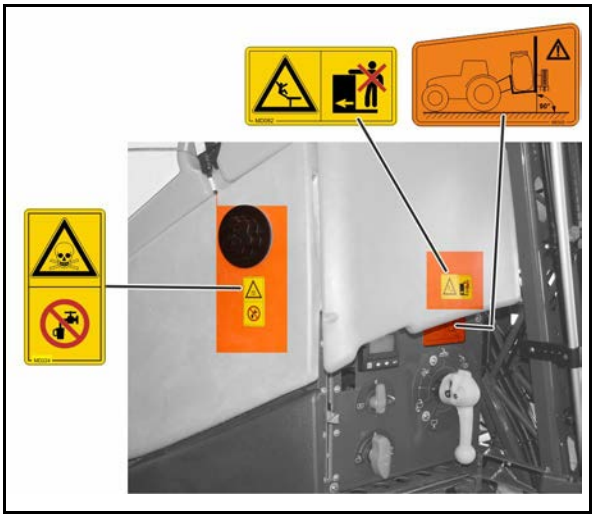

Order number and explanation	Warning symbols
MD 078 **Risk of crushing fingers or hands due to accessible moving parts in the machine.** This danger can cause extremely serious injuries and the loss of body parts. Never reach into the danger area when the tractor engine is running with PTO shaft / hydraulic / electronics system connected.	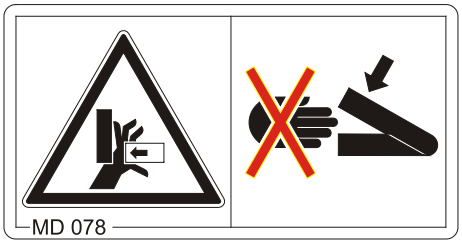
MD 082 **Risk of falling due to personnel riding on treads or platforms.** This danger can cause extremely serious and potentially fatal injuries. It is forbidden to ride on the machine or climb the machine when it is running. This also applies to machines with treads or platforms. Make sure that nobody is riding on the machine.	
MD 084 **Risk of crushing the entire body due to standing in the swivel range when machine parts are being lowered.** This danger can cause extremely serious and potentially fatal injuries. • It is forbidden to stand in the swivel range of the machine when machine parts are being lowered. • Instruct personnel to leave the swivel range of any machine parts which can be lowered before you lower the parts.	

MD 086

Risk of crushing the entire body due to necessary periods spent under raised, unsecured machine parts.

This danger can cause extremely serious and potentially fatal injuries.

Before spending time in the danger area underneath raised machine parts, secure the raised parts to prevent them being accidentally lowered.

To do this, use the mechanical support device or the hydraulic locking device.

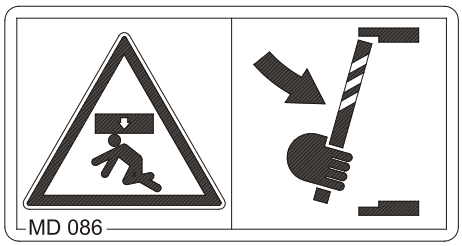

MD 094

Danger from electric shock or burns due to unintentional contact with electric transmission lines or from approaching high-voltage transmission lines without authorisation.

These dangers can cause extremely serious and potentially fatal injuries.

Maintain an adequate safety distance from transmission lines carrying high voltage.

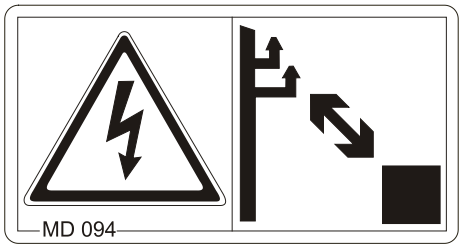

Nominal voltage	Safety distance from transmission lines
up to 1 kV	1 m
over 1 up to 110 kV	2 m
over 110 up to 220 kV	3 m
over 220 up to 380 kV	4 m

MD 095

Read and follow the operating manual and safety information before starting up the machine!

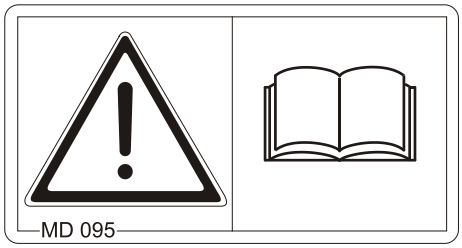

MD 097

Risk of crushing the entire body due to standing in the stroke area of the three-point suspension when the three-point hydraulics are actuated.

This danger can cause extremely serious and potentially fatal injuries.

- Personnel are prohibited from entering the stroke area of the three-point suspension when the three-point hydraulics are actuated.
- Only actuate the operator controls for the tractor's three-point hydraulic system
  - from the intended workstation.
  - if you are outside of the stroke area between the tractor and the machine.

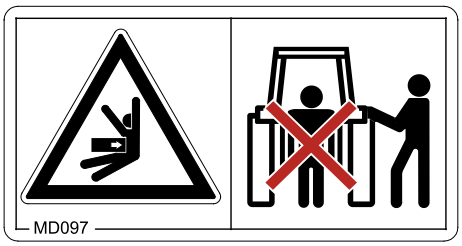

MD 099

Risk of contact with hazardous materials due to improper handling.

Causes serious, potentially fatal injuries anywhere on the body.

Before coming into contact with hazardous materials, put on protective clothing. Follow the manufacturer's safety instructions for the materials to be processed

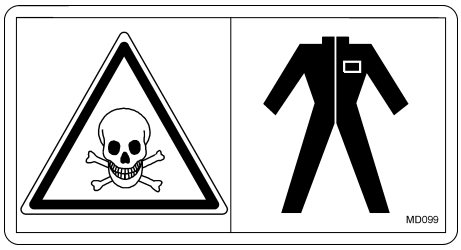

MD 100

This symbol indicates anchorage points for fastening slinging gear when loading the machine.

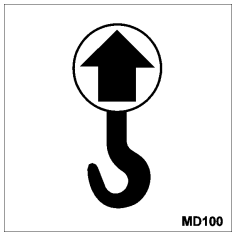

MD 118

This symbol identifies the maximum drive speed (max. 540 rpm) and direction of rotation of the machine drive shaft.

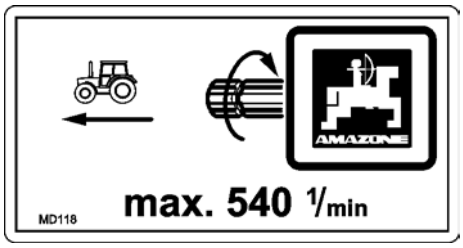

MD 153

This symbol indicates a hydraulic fluid filter.

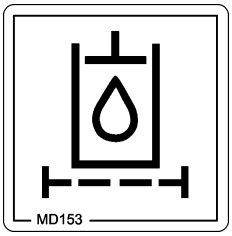

MD162

Maximum support load 800 kg.

MD 173

Risk of breathing in hazardous materials via poisonous vapours from the spray liquid tank.

This danger can cause extremely serious and potentially fatal injuries.

Never climb into the spray liquid tank.

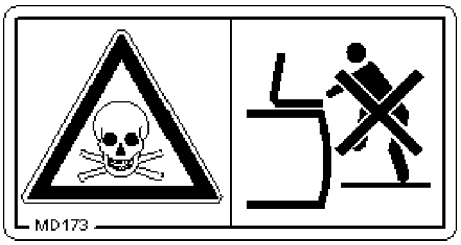

MD 199

The maximum operating pressure of the hydraulic system is 210 bars.

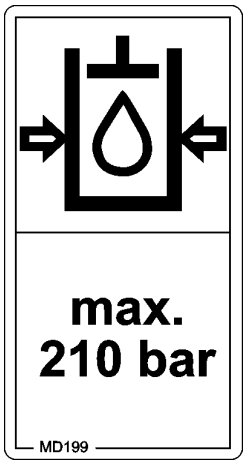

MD 210

Danger from intervention in the machine, e.g. installation, adjusting, troubleshooting, cleaning, maintaining and repairing, due to the tractor and the machine being started unintentionally and rolling.

These dangers can cause extremely serious and potentially fatal injuries.

- Secure the tractor and the machine against unintentional start-up and rolling before any intervention in the machine.
- Depending on the type of intervention, read and observe the information in the relevant sections of the operating manual.

MD 212

Danger from escaping high-pressure hydraulic fluid due to leaking hydraulic hose lines.

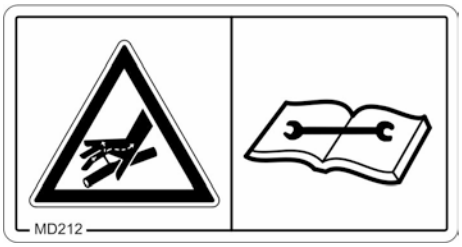

This danger may cause serious injuries, perhaps even resulting in death, if escaping high-pressure hydraulic fluid passes through the skin and into the body.

- Never attempt to plug leaks in hydraulic hose lines using your hand or fingers.
- Read and observe the information in the operating manual before carrying out maintenance work on the hydraulic hose lines.
- If you are injured by hydraulic fluid, contact a doctor immediately.

MD 224

Risk of contact with hazardous materials due to improper use of clear fresh water from the hand wash tank.

This danger can cause extremely serious and potentially fatal injuries.

Never use the clear fresh water from the hand wash tank as drinking water.

MD 226

Risk of crushing the entire body due to standing under suspended loads or raised machine parts.

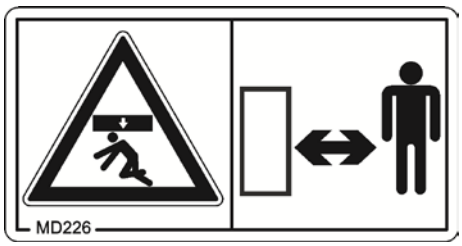

This danger can cause extremely serious and potentially fatal injuries.

- It is forbidden to stand under suspended loads or raised machine parts.
- Maintain an adequate safety distance from any suspended loads or raised machine parts.
- Ensure that all personnel maintain an adequate safety distance from suspended loads or raised machine parts.

MD239

Danger from insufficient stability of the unhitched field sprayer attachment due to improper uncoupling.

These dangers can cause extremely serious and potentially fatal injuries.

Before uncoupling the field sprayer attachment, always pull the parking supports out of their transport position into the parking position.

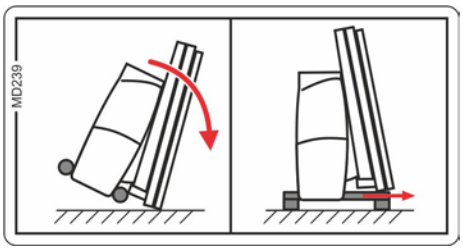

ME 525

Keep the boom carrier in an upright position.

This helps maintain optimum boom ride, particularly when using Distance Control (optional).

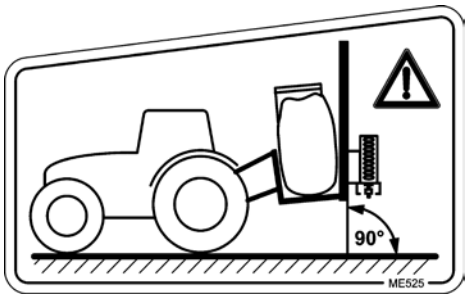

2.14 Dangers if the safety information is not observed

Non-compliance with the safety information

- can pose both a danger to people and also to the environment and machine.
- can lead to the loss of all warranty claims.

In particular, non-compliance with the safety information could pose the following risks:

- Danger to people through non-secured working areas.
- Failure of important machine functions.
- Failure of prescribed methods of maintenance and repair.
- Danger to people through mechanical and chemical influences.
- Risk to the environment through leakage of hydraulic fluid.

2.15 Safety-conscious working

Besides the safety information in this operating manual, the generally applicable national workplace safety and accident prevention regulations are binding.

Comply with the accident prevention instructions on the warning symbols.

When driving on public roads and routes, comply with the appropriate statutory road traffic regulations.

2.16 Safety information for users

WARNING

Risk of crushing, cutting, catching, being drawn in or impacts from inadequate roadworthiness and operational safety.

Before starting up the machine and the tractor, always check their roadworthiness and operational safety.

2.16.1 General safety and accident prevention information

- Beside these instructions, comply with the generally applicable national safety and accident prevention regulations.
- The warning symbols and other labels attached to the machine provide important information on safe machine operation. Compliance with this information is in the interests of your safety.
- Before moving off and starting up the machine, check the immediate area of the machine (children). Ensure that you can see clearly.
- It is forbidden to ride on the machine or use it as a means of transport.
- Drive in such a way that you always have full control over the tractor with the attached machine.

  In so doing, take your personal abilities into account, as well as the road, traffic, visibility and weather conditions, the driving characteristics of the tractor and the connected machine.

Coupling and uncoupling the machine

- Only connect and transport the machine with tractors suitable for the task.
- When coupling machines to the tractor's three-point linkage, the linkages of the tractor and the machine must always be the same.
- Connect the machine to the prescribed equipment in accordance with the specifications.
- When coupling machines to the front or the rear of the tractor, the following may not be exceeded:
  - The approved total tractor weight
  - The approved tractor axle loads
  - The approved load capacities of the tractor tyres
- Secure the tractor and the machine against rolling unintentionally before coupling or uncoupling the machine.
- It is forbidden for people to stand between the machine to be coupled and the tractor whilst the tractor is moving towards the machine.
  Any helpers may only act as guides standing next to the vehicles, and may only move between the vehicles when both are at a standstill.
- Before connecting the machine to or disconnecting the machine from the tractor's three-point linkage, secure the operating lever of the tractor hydraulic system so that unintentional raising or lowering is prevented.

- When coupling and uncoupling machines, move the support equipment (if available) to the appropriate position (stability).
- When actuating the support equipment, there is a risk of injury from crushing and cutting points.
- Be particularly careful when coupling the machine to the tractor or uncoupling it from the tractor. There are crushing and cutting points in the area of the coupling point between the tractor and the machine.
- It is forbidden to stand between the tractor and the machine when actuating the three-point linkage.
- Coupled supply lines
  - must give slightly to all movements while cornering without tensioning, kinking or rubbing.
  - must not chafe against other parts.
- The release ropes for quick couplings must hang loosely and must not release themselves when lowered.
- Also ensure that uncoupled machines are stable.

Use of the machine

- Before starting work, ensure that you understand all the equipment and actuation elements of the machine and their function. There is no time for this when the machine is already in operation.
- Do not wear loose-fitting clothing. Loose clothing increases the risk of being caught by the drive shaft.
- Only start-up the machine, when all the safety equipment has been attached and is in the safety position.
- Comply with the maximum load for the connected machine and the permissible axle and drawbar loads for the tractor. If necessary, drive only with a partially filled tank.
- It is forbidden to stand in the working area of the machine.
- It is forbidden to stand in the turning and swivel range of the machine.
- There are crushing and cutting points at externally-actuated (e.g. hydraulic) machine points.
- Only actuate externally-actuated machine parts when you are sure that no-one is standing within the prescribed safety distance.
- Before leaving the tractor,
  - lower the machine onto the ground
  - switch off the tractor engine
  - remove the ignition key

Machine transportation

- Comply with the national road traffic regulations when using public highways.
- Before moving off, check:
  - the correct connection of the supply lines
  - the lighting system for damage, function and cleanliness
  - the brake and hydraulic system for visible damage
  - that the parking brake is completely disengaged
  - the function of the brake system
- Ensure that the tractor has sufficient steering and braking power.

  Any machines and front/rear weights connected to the tractor influence the driving behaviour and the steering and braking power of the tractor.
- If necessary, use front weights.

  The front tractor axle must always be loaded with at least 20% of the tractor empty weight, in order to ensure sufficient steering power.
- Always fix the front or rear weights to the intended fixing points according to regulations.
- Comply with the maximum load for the connected machine and the approved axle and drawbar loads for the tractor.
- The tractor must guarantee the prescribed brake delay for the loaded vehicle combination (tractor plus connected machine).
- Check the brake power before moving off.
- When turning corners with the machine connected, take the broad load and balance weight of the machine into account.
- If the machine is fixed to the tractor's three-point linkage or lower links, before moving off, ensure sufficient side locking of the tractor lower links.
- Before moving off, move all the swivellable machine parts to the transport position.
- Before moving off, secure all swivellable machine parts in the transport position against dangerous position changes. Use the transport safety catches intended for this.
- Before moving off, secure the operating lever of the three-point hydraulic system against the unintentional raising or lowering of the connected machine.
- Check that the transport equipment, e.g. lighting, warning equipment and protective equipment, is correctly mounted on the machine.
- Carry out a visual check that the upper and lower link pins are firmly fixed with the linchpin against unintentional release.
- Adjust your driving speed to the prevailing conditions.
- Before driving downhill, switch to a low gear.
- Before moving off, always switch off independent wheel braking (lock the pedals).

2.16.2 Hydraulic system

- The hydraulic system is under a high pressure.
- Ensure that the hydraulic hose lines are connected correctly.
- When connecting the hydraulic hose lines, ensure that the hydraulic system is depressurised on both the machine and tractor sides.
- It is forbidden to lock the operator controls on the tractor used for hydraulic and electrical movements of components, e.g. folding, swivelling and pushing movements. The movement must stop automatically when you release the appropriate control. This does not apply to equipment movements that
  - are continuous
  - are automatically controlled
  - require a floating position or pressed position to function
- Before working on the hydraulic system,
  - lower the machine
  - depressurise the hydraulic system
  - shut off the tractor engine
  - apply the parking brake
  - remove the ignition key
- Have the hydraulic hose lines checked at least once a year by an expert to ensure they are in safe working order. Replace the hydraulic hose lines if they are damaged or worn. Only use genuine AMAZONE hydraulic hose lines.
- The hydraulic hose lines should not be used for longer than six years, including any storage time of maximum two years. Even with proper storage and approved use, hoses and hose connections are subject to natural ageing, thus limiting storage time and the length of use. However, it may be possible to specify the length of use from experience values, in particular when taking the risk potential into account. In the case of hoses and hose connections made from thermoplastics, other guide values may be decisive.
- Never attempt to plug leaks in hydraulic hose lines using your hand or fingers.

  Escaping high pressure fluid (hydraulic fluid) may pass through the skin and ingress into the body, causing serious injuries.

  If you are injured by hydraulic fluid, contact a doctor immediately. Risk of infection
- When searching for leaks, use suitable aids to avoid the serious risk of infection.

2.16.3 Electrical system

- When working on the electrical system, always disconnect the battery (negative terminal).
- Only use the prescribed fuses. If fuses are used that are too highly rated, the electrical system will be destroyed – risk of fire.
- Ensure that the battery is connected correctly - firstly connect the positive terminal and then connect the negative terminal. When disconnecting the battery, disconnect the negative terminal first, followed by the positive terminal.
- Always place the appropriate cover over the positive battery terminal. If there is accidental earth contact, there is a risk of explosion.
- Risk of explosion. Avoid sparking and naked flames in the area of the battery.
- The machine may be equipped with electronic components whose function is influenced by electromagnetic interference from other units. Such interference can pose risks to people, if the following safety information is not followed.
  - If retrofitting electrical units and/or components on the machine with a connection to the on-board power supply, the user is responsible for checking whether the installation might cause faults on the vehicle electronics or other components.
  - Ensure that the retrofitted electrical and electronic components comply with the EMC directive 2014/30/EC in the appropriate version and bear the CE mark.

2.16.4 Universal joint shaft operation

- Use only the PTO shafts prescribed by the AMAZONEN-WERKE factories, equipped with the proper safety devices.
- Also read and follow the operating manual from the PTO shaft manufacturer.
- The protective tube and PTO shaft guard must be undamaged, and the shield of the tractor and machine universal joint shaft must be attached and be in proper working condition.
- Work is prohibited while the safety devices are damaged.
- You may install or remove the PTO shaft only after you have done all of the following:
  - Switched off the universal joint shaft
  - Switched off the tractor engine
  - Applied the parking brake
  - Removed the ignition key
- Always ensure that the PTO shaft is installed and secured correctly.
- When using wide-angle PTO shafts, always install the wide angle joint at the pivot point between the tractor and machine.
- Secure the PTO shaft guard by attaching the chain(s) to prevent movement.
- Observe the prescribed pipe overlaps in transport and operational positions. (Read and follow the operating manual from the

PTO shaft manufacturer.)

- When turning corners, observe the permitted bending and displacement of the PTO shaft.
- Before switching on the universal joint shaft, check that the selected universal joint shaft speed of the tractor matches the permitted drive speed of the machine.
- Instruct people to leave the danger area of the machine before you switch on the universal joint shaft.
- While work is being carried out with the universal joint shaft, there must be no one in the area of the universal joint or PTO shaft while it is turning.
- Never switch on the universal joint shaft while the tractor engine is shut off.
- Always switch off the universal joint shaft whenever excessive bending occurs or it is not needed.
- WARNING! After the universal joint shaft is switched off, there is a danger of injury from the continued rotation of freewheeling machine parts.

  Do not approach the machine too closely during this time. You may work on the machine only after all machine parts have come to a complete stop.
- Secure the tractor and machine against unintentional starting and unintentional rolling before you perform any cleaning, servicing or maintenance work on universal joint shaft-driven machines or PTO shafts.
- After decoupling the PTO shaft, place it on the holder provided.
- After removing the PTO shaft, attach the protective sleeve to the universal joint shaft stub.
- When using the travel-dependent universal joint shaft, note that the universal joint shaft speed depends on the drive speed, and that the direction of rotation reverses when you drive in reverse.

2.16.5 Field sprayer operation

- Observe the recommendations of the crop protection agent manufacturer in respect of
  - protective clothing
  - warning information on exposure to crop protection agents
  - regulations on dosing, applications and cleaning
- When handling crop protection products, observe the safety instructions provided by the crop protection product manufacturer.
- Using unauthorised crop protection products is prohibited!
- Observe the information in the German Plant Protection Law.
- Never open lines which are under pressure.
- Only use genuine AMAZONE replacement hoses which stand up to chemical, mechanical and thermal requirements. Only use hose clamps made from V2A for installation.
- The nominal volume of the spray liquid tank must not be exceeded during filling.

- **When there will be exposure to crop protection agent, wear the proper protective clothing, i.e. gloves, overalls, safety glasses, etc.**
- **When using tractors with a cab with ventilation fans, replace the fresh air filters with activated carbon filters.**
- **Observe the information on the compatibility of crop protection agents and substances for the field sprayer.**
- **Do not spray any crop protection agents which have a tendency to stick together or set.**
- **Do not fill field sprayers with water from bodies of water which are open to the public, for the protection of people, animals and the environment.**
- **Only fill field sprayers**
  - **using a free flow from the mains water supply.**
  - **using genuine AMAZONE filling equipment.**

2.16.6 Cleaning, maintenance and repairs

- Due to toxic vapours in the spray liquid tank, climbing into the spray liquid tank is always forbidden.
- Repair work in the spray liquid tank must only be carried out by a specialist workshop!
- Only carry out cleaning, maintenance and repair work on the machine when
  - the drive is switched off
  - the tractor engine has come to a complete stop
  - the ignition key has been removed
  - the machine connector has been removed from the on-board computer
- Regularly check the nuts and bolts for firm seating and retighten them as necessary.
- Secure the raised machine and/or raised machine parts against unintentional lowering before performing any cleaning, maintenance or repair work on the machine.
- When replacing work tools with blades, use suitable tools and gloves.
- Dispose of oils, greases and filters in the appropriate way.
- Disconnect the cable to the tractor generator and battery before carrying out electrical welding work on the tractor and on attached machines.
- Spare parts must meet at least the specified technical requirements of AMAZONEN-WERKE. This is ensured through the use of genuine AMAZONE spare parts.
- When repairing field sprayers which have been used for liquid fertiliser application with ammonium nitrate / urea solution, observe the following points:

  Residues of ammonium nitrate / urea solutions may form salts by the evaporation of the water on or in the spray liquid tank. This produces pure ammonium nitrate and urea. In its undiluted form, ammonium nitrate is explosive when combined with organic substances, e.g. urea, and subjected to critical temperatures during repair work (e.g. welding, grinding, filing).

  This danger can be eliminated by thoroughly washing out the spray liquid tank or the parts intended for repair with water, because the salt of the ammonium nitrate / urea solution is water-soluble. For this reason, clean the field sprayer thoroughly with water before carrying out repair work.

3 Loading and unloading

Loading using a lifting crane

The machine has two attachment points.

Danger

When loading the machine using a lifting crane, use the marked attachment points for lifting belts.

Danger

The minimum tensile strength of each lifting belt must be 1500 kg!

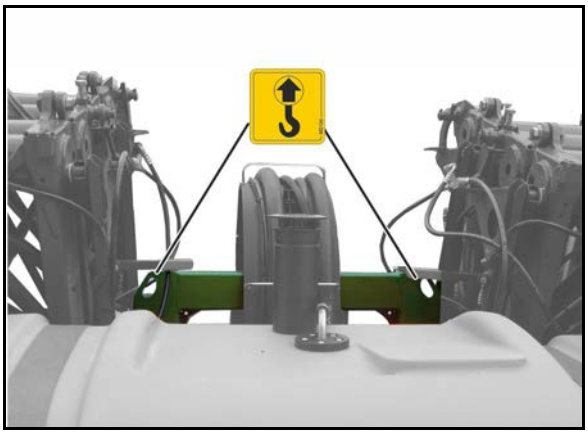

4 Product description

4.1 Overview of the assemblies

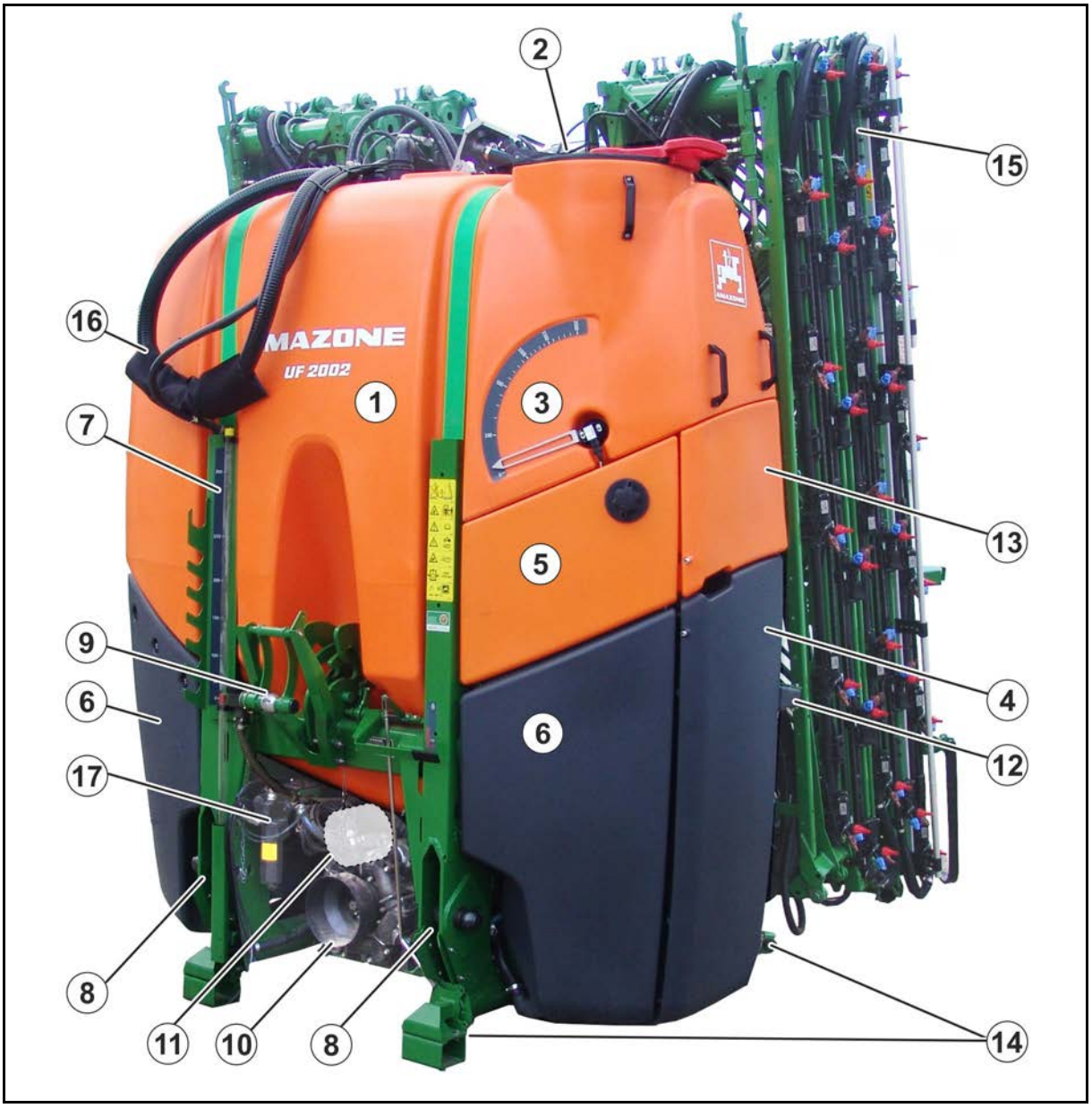

(1) Spray liquid tank

(2) Filling opening for spray liquid tank with folding cover and filling sieve

(3) Spray liquid tank fill level indicator

(4) Operating valve chest with cover

(5) Hand wash tank

(6) Two-part flushing water tank

(7) Flushing water tank fill level indicator

(8) Lower coupling point

(9) Upper coupling point / quick-coupling system

(10) Sprayer and agitator pump

(11) Flushing water pump

(12) Parking position for hook tool of the parking supports

(13) Transport box

(14) Telescopic parking device

(15) Folding sprayer boom

(16) Connecting hose front tank / FlowControl

(17) Hydraulic block and oil filter

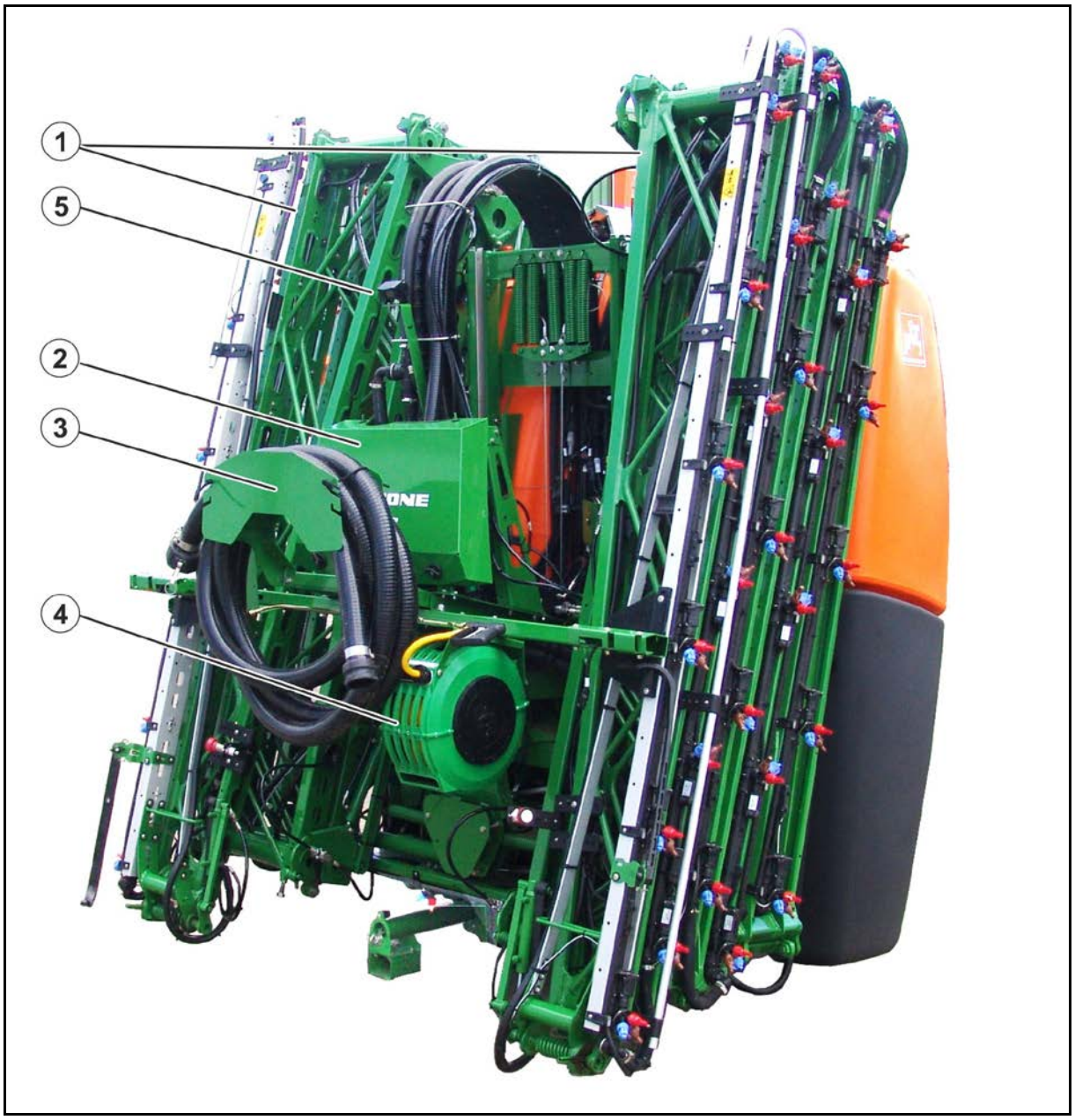

(1) Folding sprayer boom

(2) Part width section fittings

(3) Shelf for the suction hose

(4) Outer rinsing unit

(5) Rear camera

4.2 Safety and protection equipment

- Left and right-hand parking supports to prevent the machine from falling over when parked

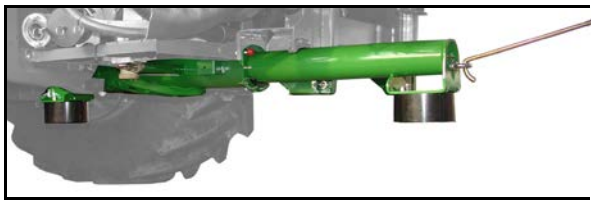

- Transport locking mechanism to prevent the **Super-S** boom from folding out unintentionally

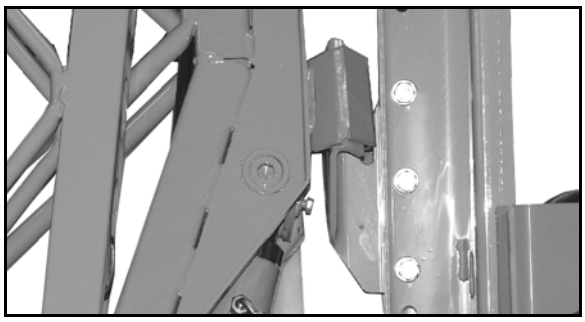

(1) Visual check of the **Super-S** boom lock

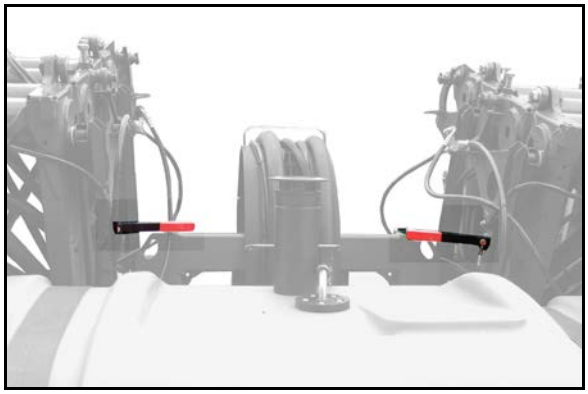

(1) PTO shaft guard

(2) Machine PTO shaft guard

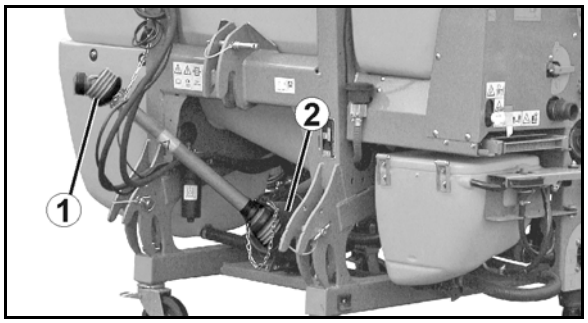

4.3 Supply hoses between the tractor and the machine

Supply hoses in parking position:

(1) Hydraulic hose lines (depending on equipment provided)

(2) Cable with connection for lighting

(3) Computer cable with machine connector

4.4 Transportation equipment

Rear lighting

(1) Rear lights, brake lights, turn indicators (required if the turn indicators on the tractor are obscured)

(2) 2 warning signs

(3) 1 registration plate holder with lighting (required if the registration plate on the tractor is obscured)

(4) Rectangular emitter, yellow

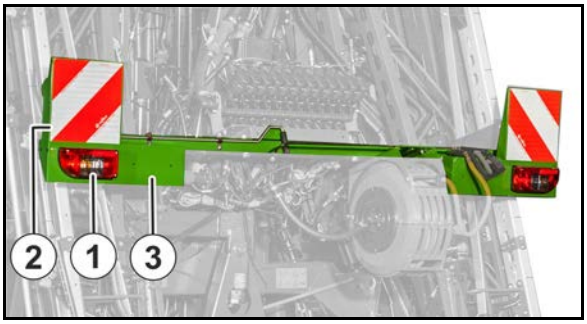

Connect the lighting system via the connector to the 7-pin tractor socket.

One additional warning sign on each side in France.

4.5 Intended use

The field sprayer

- is intended for the transport and application of crop protection agents (insecticide, fungicide, herbicide, etc.) in suspension, emulsion or as a mixture, and of liquid fertilisers.
- is designed exclusively for agricultural use for treating field crops.
- is attached to the tractor's three-point hydraulic system and operated by one person.

Restrictions for use on slopes

(1) Driving on slopes with a full spray liquid tank

(2) Driving on slopes with a partially full spray liquid tank

(3) Application of residual quantities

(4) Turning

(5) Folding the sprayer boom

	(1)	(2)	(3)	(4)	(5)
Across a slope	15%	15%	15%	15%	20%
Up/down the slope	15%	30%	15%	15%	20%

The intended use also includes:

- Compliance with all the instructions in this operating manual.
- Execution of inspection and maintenance work.
- Exclusive use of genuine AMAZONE spare parts.

Other uses to those specified above are forbidden and shall be considered as improper.

For any damage resulting from improper use:

- the operator bears the sole responsibility,
- the manufacturer will assume no liability whatsoever.

4.6 Device inspections

The implement underlies the European Union universally applicable regular device inspections (Crop Protection Directive 2009/128/EC and EN ISO 16122).

Have the device inspected at regular intervals by a recognised and certified inspection workshop.

The date for performing the next device inspection is written on the inspection plate on the implement.

German inspection plate

4.7 Consequences of using certain crop protection agents

We would like to draw attention to the fact that extended exposure (20 hours) to crop protection agents with which we are familiar, e.g. Lasso, Betanal and Tramat, Stomp, Iloxan, Mudecan, Elancolan and Teridox, can cause damage to the pump diaphragms, hoses, spray lines and tanks. The examples given are in no way intended to represent a comprehensive list.

In particular, we warn against unauthorised mixtures of two or more different crop protection agents.

Substances which have a tendency to stick together or set must not be applied.

When using such aggressive crop protection agents, it is recommended that the spray liquid be applied immediately after preparation and then that the sprayer be thoroughly cleaned with water.

Desmopan diaphragms may be supplied as a replacement for the pump diaphragms. These are resistant to solvent-containing crop protection agents. However their service life is reduced by use at low temperatures (e.g. AUS in frosty conditions).

The materials and components used in the construction of AMAZONE field sprayers are safe for liquid fertiliser.

4.8 Danger areas and danger points

The danger area is the area around the machine in which people can be caught by:

- work movements made by the machine and its tools
- materials or foreign bodies thrown out of the machine
- tools rising or falling unintentionally
- unintentional rolling of the tractor and the machine

Within the machine danger area, there are danger points with permanent or unexpected risks. Warning symbols indicate these danger points and warn against residual dangers, which cannot be eliminated for practical reasons. In such cases, the special safety regulations in the appropriate section are valid.

No-one may stand in the machine danger area:

- if the tractor engine is running with the PTO shaft / hydraulic system connected.
- if the tractor and machine are not protected against unintentional start-up and rolling.

The operating person may only move the machine or switch or drive the tools from the transport position to the working position or vice-versa when there is no-one in the machine danger area.

Danger points exist:

- between the tractor and the field sprayer attachment, especially when coupling and uncoupling.
- near moving parts.
- when climbing onto the machine.
- in the swivel range of the sprayer boom.
- in the spray liquid tank due to poisonous vapours.
- underneath raised, unsecured machines or machine parts.
- when unfolding/folding the sprayer boom in the vicinity of overhead electricity cables, through contact with the cables.

4.9 Rating plate and CE mark

The rating plate specifies:

- Implement ID No.
- Product
- Basic weight kg
- Permissible total weight kg
- Factory
- Model year
- Year of manufacture

4.10 Conformity

	Directives/Standards designation	
The implement complies with the	• Implement directive	2006/42/EC
	• EMC directive	2014/30/EC

4.11 Technically possible maximum application rate

The application rate of the implement is limited by the following factors:

- Maximum flow to the sprayer boom of 200 l/min (HighFlow 400 l/min).
- Maximum flow per part-width section of 25 l/min (with 2 spray lines: 40 l/min per part-width section).
- Maximum flow per nozzle body of 4 l/min.

4.12 Maximum permissible application rate

The permissible application rate of the implement is limited by the minimum required agitator capacity.

The agitator capacity per minute should be 5% of the hopper volume.

This is particularly applicable for active substances that are hard to keep in suspension.

With active substances that are dissolved, the agitator capacity can be reduced.

Determining the permissible application rate depending on the agitator capacity

Calculation formula for the application rate in l/min:

(Agitator capacity per minute = 5% of the tank volume)

Permissible application rate [l/min]	=	Pump capacity [l/min]	- 0.05 x nominal tank volume [l]	
			(see technical data)	

Conversion of the application rate in l/ha:

1. Determine the application rate per nozzle (divide the permissible application rate by the number of nozzles).
2. Read the application rate per hectare depending on the speed from the spray table (See page **194**).

Example: UF1602, Pumpe BP 235, Super S 20 m, 40 nozzles, 10 km/h

Permissible application rate = 202 l/min - 0,05 x 1600 l = 122 l/min

→ Application rate per nozzle = 3,1 l/min

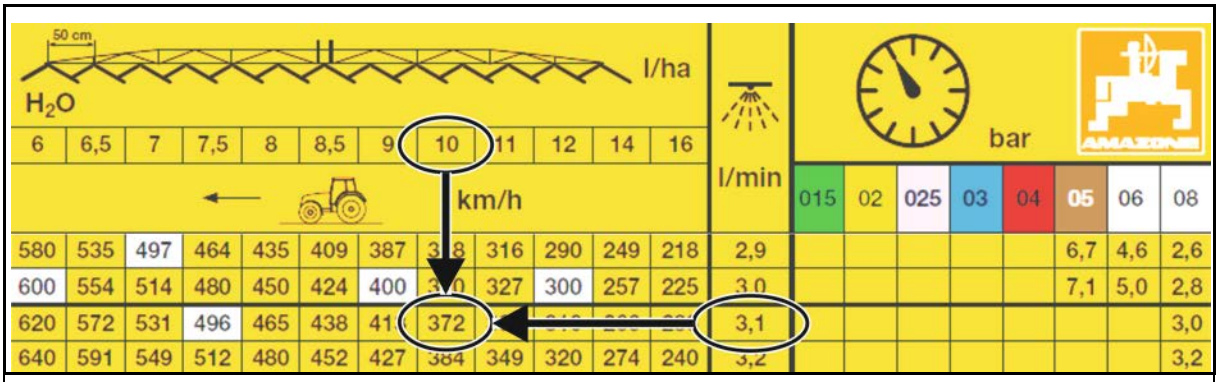

→ **Permissible application rate per hectare = 372 l/ha**

4.13 Technical Data

4.13.1 Basic machine

Type	UF 1602	UF 2002
Spray liquid tank		
Actual volume	1680 l	2100 l
Nominal volume	1600 l	2000 l
Flushing water tank	200 l oder 350 l	350 l
Permissible system pressure	10 bar	
Filling height from the Ground / maintenance platform	2225 mm / 1225 mm	2500 mm / 1500 mm
Overall length*	1000 mm	1000 mm
Centre of gravity distance d	0,85 mm	0,80 mm
Three-point connection	Kat. 2 N / 3	Kat. 2 N / 3
Spray pressure adjustment	elektrisch	
Spray pressure setting range	0,8 – 10 bar	
Spray pressure display	Digital spray pressure display	
Pressure filter	50 (80,100) mesh	
Agitator	stufenlos	

Super-S2-sprayer boom

Working width [m]	15	16	18	20	21	21/15	24	27	28	30
Transport width	2400 mm									
Overall length	900 mm							1000 mm		
Height when machine is parked	2900 mm (S2) / (S1) (without parking device)									
Nozzle height	500 mm - 2100 mm				500 mm - 2200 mm					

4.13.2 Spraying technology

Part-width sections depending on the working width

Working width	Number	Number of spraying nozzles width sections
15 m	5	6-6-6-6-6
	7	3-5-5-4-5-5-3
16 m	5	7-6-6-6-7
18 m	5	6-8-8-8-6
	7	5-6-5-4-5-6-5
20 m	5	8-8-8-8-8
	7	5-5-6-8-6-5-5
21 m	5	9-8-8-8-9
	7	6-6-6-6-6-6-6
	9	4-4-6-5-4-5-6-4-4
	11	4-4-3-3-5-4-5-3-3-4-4
21/15 m	7	6-6-6-6-6-6-6
	9	6-4-4-5-4-5-4-4-6
	11	3-3-4-4-5-4-5-4-4-3-3
24 m	5	9-10-10-10-9
	7	6-6-8-8-8-6-6
	9	6-5-6-5-4-5-6-5-6
	11	4-4-5-4-5-4-5-4-5-4-4
27 m 27/21/15 m	**7**	9-6-8-8-8-6-9
	9	6-6-6-6-6-6-6-6-6
	11	6-6-4-4-5-4-5-4-4-6-6
28 m	**7**	8-8-8-8-8-8-8
	9	7-6-6-6-6-6-6-6-7
	11	5-5-5-6-5-4-5-6-5-5-5
30 m	**7**	8-9-8-10-8-9-8
	9	6-6-7-7-8-7-7-6-6
	11	6-6-5-6-5-4-5-6-5-6-6

Pump- equipment

	Flushing water	Spraying / agitating		
	160l/min	200 l/min	250 l/min	300 l/min
Pump model	EX 6500-C	BP 235	BP 280	BP 320
Delivery capacity at 540 rpm	55 l/min (1060 rpm)	210 l/min (0 bar)	250 l/min (0 bar)	300 l/min (0 bar)
		202 l/min (10 bar)	240 l/min (10 bar)	280 l/min (10 bar)
Power requirement	0,3 kW	8,4 kW (10 bar)	9,8 kW (10 bar)	11 kW (10 bar)
Construction type	Roller pump	piston diaphragm pump		
Pulsation damping	---	Fluid damping		
Maximum permitted pump speed	1060 rpm	540 rpm		

4.13.3 Technical Residue

Suction chest technical residue

On the flat		8 l
Along the contours		
	Direction of travel 20 % to left	10 l
	Direction of travel 20 % to right	11 l
Along the gradient**		
	20 % up the slope	9 l
	20 % down the slope	9 l
Pump		6 l

Technische Restmenge Gestänge

Working width	Part-width section control							Single nozzle control		
	Number of part-width sections	Without DUS			With DUS			With DUS pro		
		A	B	C	A	B	C	A	B	C
15 m	5	4,5	7,0	11,5	12,5	1,0	13,5	14,5	1,0	15,5
	7	4,5	7,5	12,0	13,0	1,0	14,0			
16 m	5	4,5	7,5	12,0	13,0	1,0	14,0	14,8	1,0	15,8
18 m	5	4,5	8,0	12,5	13,5	1,0	14,5	15,7	1,0	16,7
	7	4,5	8,5	13,0	14,0	1,0	15,0			
20 m	5	4,5	8,5	13,0	14,0	1,0	15,5	18,1	1,0	19,1
	7	4.5	9.5	14.0	15.0	1.0	16.0			
21 m	5	4,5	9,0	13,5	14,0	1,5	16,0	18	1,5	19,5
	7	5,0	10,0	15,0	16,0	1,5	17,5			
	9	5,0	11,0	16,0	17,0	1,5	18,5			
	11	5.5	15.5	21.0	17.5	1.5	19.0			
21/15 m	7	5,0	10,0	15,0	16,0	1,5	17,5	18,8	1,5	20,3
	9	5,0	11,0	16,0	17,0	1,5	18,5			
	11	5.5	15.5	21.0	17.5	1.5	19.0			
24	5	5,0	10,0	15,0	16,0	1,5	17,5	20,6	1,5	22,1
	7	5,0	11,5	16,5	17,5	1,5	19,0			
	9	5,0	12,0	17,0	18,0	1,5	19,5			
	11	5.5	16.5	22.0	23.5	1.5	25.0			
27	7	5,0	12,5	17,5	18,5	2,0	20,5	22,2	2,0	24,2
	9	5,5	17,5	23,0	24,0	2,0	26,0			
	11	5.5	21.5	27.0	28.0	2.0	30.0			
28	7	5,0	13,0	18,0	19,0	2,0	21,0	22,4	2,0	24,4
	9	5,5	17,5	23,0	24,0	2,0	26,0			
	11	5.5	22.5	28.0	29.0	2.0	31.0			
30	7	5,0	13,5	18,5	19,5	2,5	22,0	26,4	2,5	28,9
	9	5,0	18,0	23,5	24,5	2,5	27,0			
	11	5,0	23,0	28,5	29,5	2,5	32,0			

DUS: Pressure circulating system
A: Dilutable
B: Not dilutable
C: Total

4.13.4 Weights of basic implement and equipment

Payload = permissible total weight - basic weight

Type	UF 1602	UF 2002
permissible total weight	3950 kg	4150 kg

The basic weight is the sum of the weights of the basic machine and of the boom.

Typ	UF 1602	UF 2002
Weight of basic implement	550 kg	570 kg

Working width	15 m	16 m	18 m	20 m	21 m	21/15	24 m	27/18 m	28 m	30 m
Weight spraying boom	415 kg	423 kg	429 kg	541 kg	544 kg	539 kg	561 kg	610 kg	611 kg	630 kg
Weight spraying boom	12 kg	12 kg	14 kg	16 kg	23 kg	23 kg	24 kg	30 kg	31 kg	32 kg

4.14 Required tractor equipment

To be used with the machine, the tractor must fulfil the performance requirements and be equipped with the required electrical, hydraulic and brake connections for the brake system.

Tractor engine power

UF 1602	from 90 kW (125 bhp) upwards
UF 2002	from 100 kW (137 bhp) upwards

Electrical system

Battery voltage:	• 12 V (volts)
Lighting socket:	• 7 pin

Hydraulic system

Maximum operating pressure:	• 210 bar
Tractor pump capacity:	• At least 25 l/min at 150 bar for the hydraulic block (with Profi-folding, optional)
Implement hydraulic fluid:	• HLP68 DIN 51524 The implement hydraulic fluid is suitable for the combined hydraulic fluid circuits of all standard tractor brands.
Control units:	• Depending on equipment, see page 66

Universal joint shaft

Required speed:	• 540 rpm
Direction of rotation:	• Clockwise, viewed from rear toward the tractor.

Three-point attachment

- The tractor's lower links must have lower link hooks.
- The tractor's upper links must have upper link hooks.

4.15 Noise emissions data

The workplace-related emissions value (acoustic pressure level) is 74 dB(A), measured during operation at the ear of the tractor driver with the cab closed.

Measuring unit: OPTAC SLM 5.

The noise level is primarily dependent on the vehicle used.

5 Construction and function of the basic machine

The following section provides information on the machine structure and the functions of the individual components.

5.1 Function

Through the suction valve chest and the suction filter (2), the spraying pump (1) draws

- spray liquid from the spray liquid tank.
- fresh water via the external suction port (3).
- flushing water from the flushing water tank.

Thus, the drawn liquid is conveyed to

- the part-width section valves (5) via the pressure filter (4). The part-width section valves take over the distribution to the spray lines.
  Alternatively:

  through the pressure filter (4) to the single nozzle control (10).
- to the injector (6) and the induction bowl (7).
  To prepare the spray liquid, pour the required quantity of agent into the induction bowl and draw into the spray liquid tank.
- directly in the spray liquid tank.
- to the internal (8) or external cleaning switch tap (9).

The agitator ensures homogeneous spray liquid in the spray liquid tank.

Single nozzle control

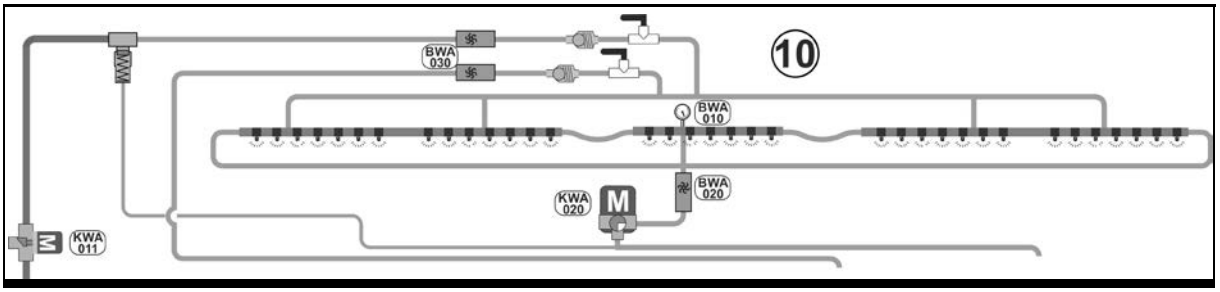

Part-width section control

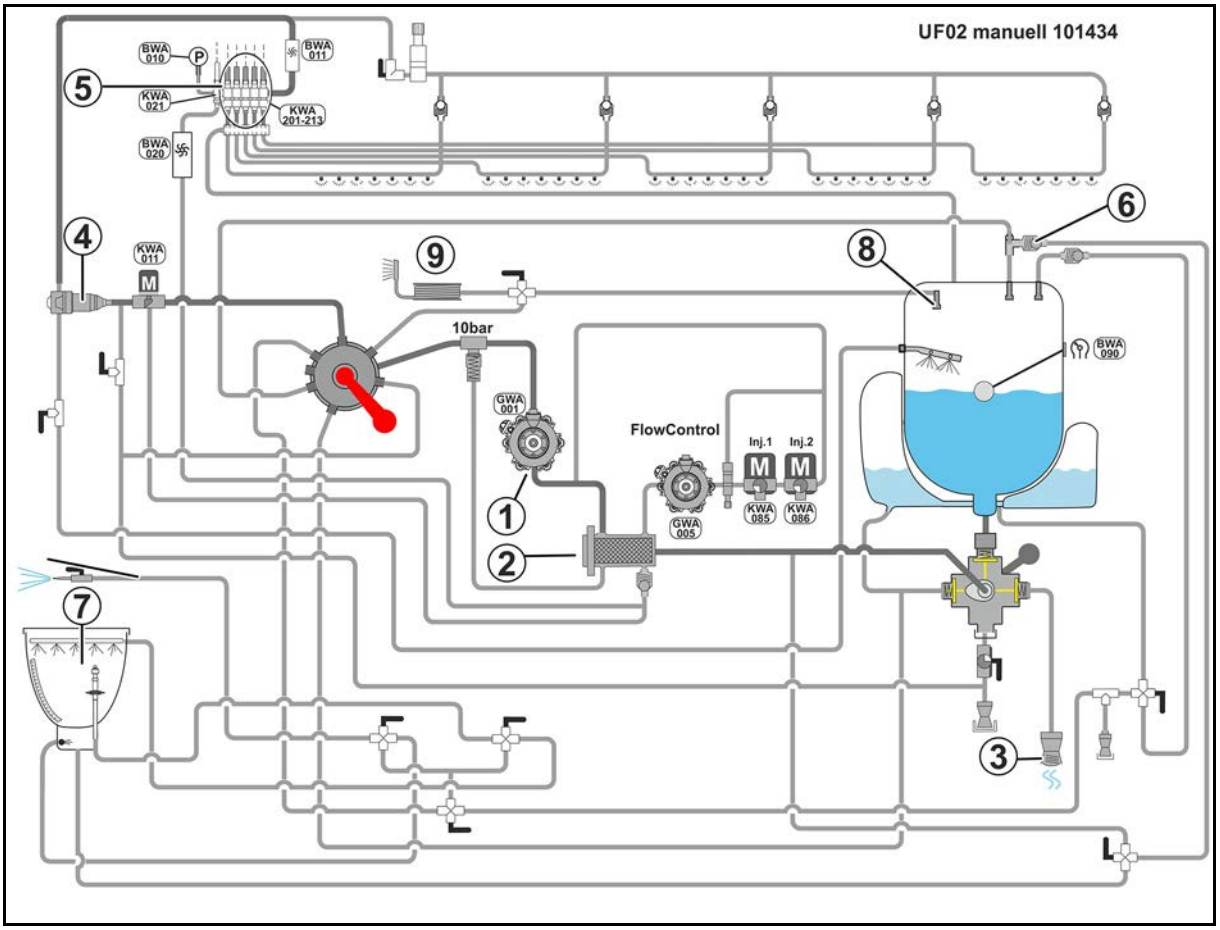

5.2 Control panel

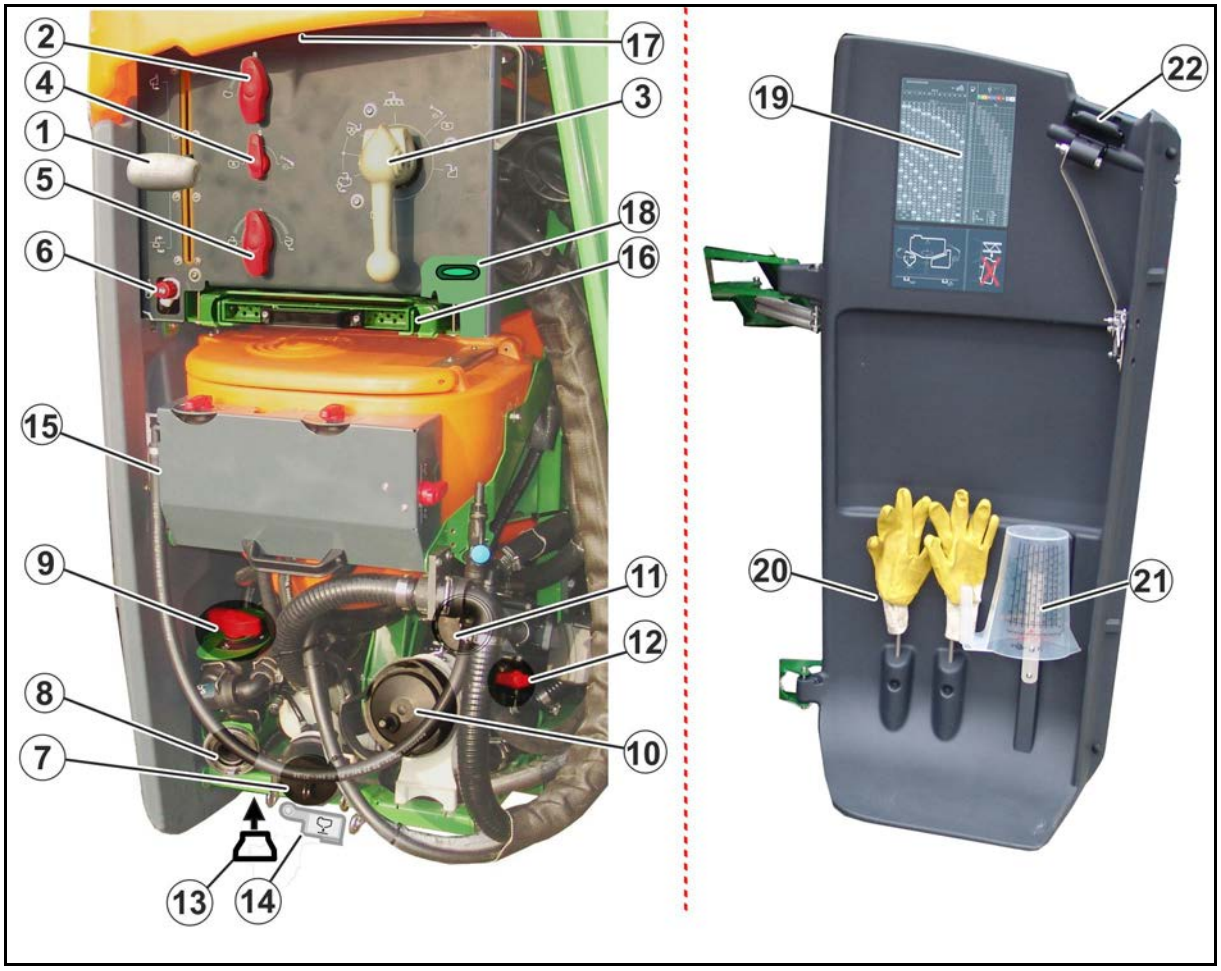

(1) Suction valve chest switch **(SA)**

(2) Agitator switch tap **(RW)**

(3) Pressure side control **(DA)**

(4) Cleaning switch tap **(CL)**

(5) Injector switch tap **(IJ)**

(6) Hand wash water stop tap

(7) Filling connection (suction)

(8) Filling connection (pressure) for spray liquid tank (optional), flushing water tank

(9) Pressure filling switch tap

(10) Suction filter

(11) Pressure filter

(12) Pressure filter drain stop tap **(DE)**

(13) Drain for residual quantity from the spray liquid tank, pressure filter and quick emptying

(14) Stop tap for residual quantity **(EW)**

(15) Induction bowl

(16) Ascent

(17) Lighting

(18) Spirit level

(19) Spray table

(20) Holder for protective gloves

(21) Holder for measuring cup

(22) Cover hood opener

Switch tap on the control terminal

Pressure valve chest switch tap (DA)

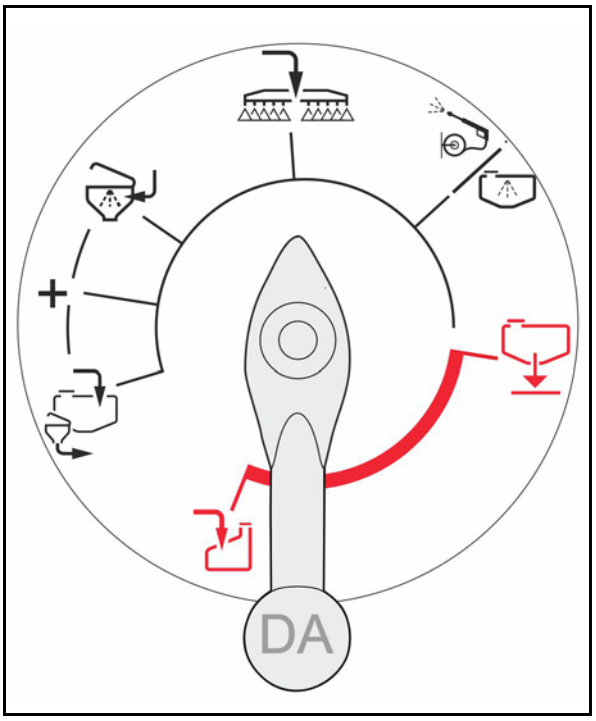

- Fill spray liquid tank via suction connection / suction from the induction bowl
- Supply induction bowl
- + (+) Switch the functions simultaneously.
- Sprayers
- Cleaning

Observe the operating manual:

- Quick emptying
- Filling the flushing water tank

Operation of the pressure valve chest:

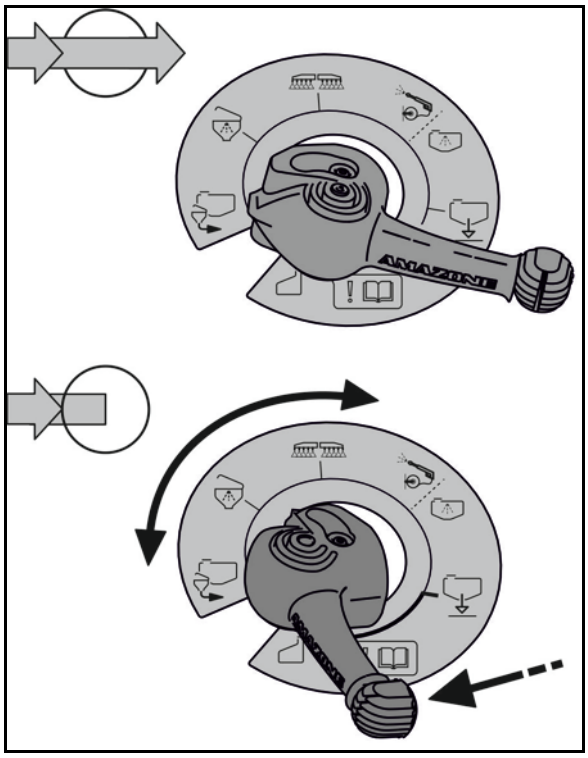

- Activate the liquid circulation on the pressure side
→ The spray liquid can flow.

- Switch tap is locked.
→ Hand lever cannot be turned, function selection not possible.

- Liquid circulation blocked on the pressure side.
→ The spray liquid cannot flow.

- Switch tap unlocked.
→ Hand lever can be turned, function selection possible.

uction valve chest display (SA)

- Suction from flushing water tank
- Suction from spray liquid tank
- Suction via suction hose

Agitator switch tap (RW)

- Agitator running at maximum
- **0** – Agitator off

Cleaning switch tap (CL)

- Internal cleaning
- External cleaning

Switch tap injector (IJ)

- Suction from induction bowl
- Increase filling capacity using injector

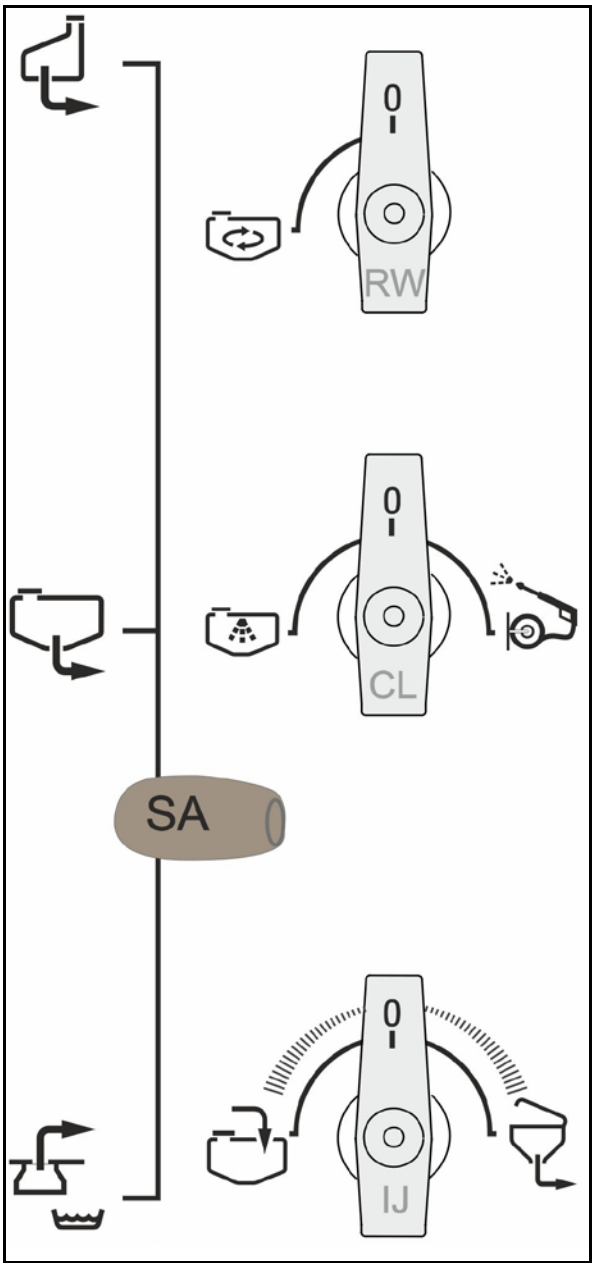

Pressure filter switch tap (DE)

- Drain pressure filter

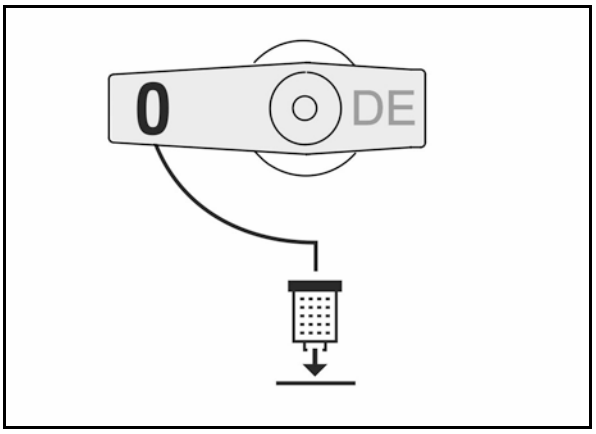

- **Pressure filling switch tap (FD)**
  - o Filling the spray liquid tank
  - o Filling the flushing water tank

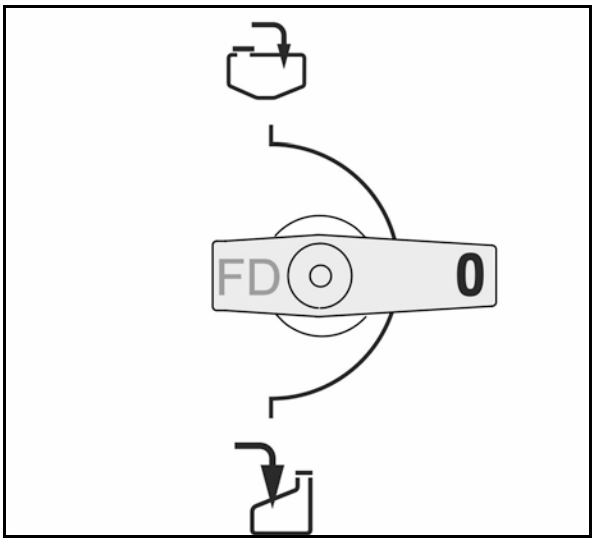

Stop tap for emptying the spray liquid tank

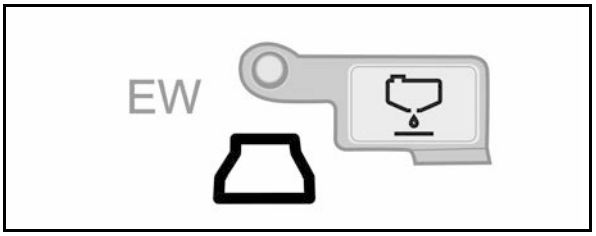

5.2.1 Induction bowl with injector and canister flushing

(1) Swivelling induction bowl for pouring, dissolving and drawing in crop protection agents and urea.

Holding capacity of approx. 60 l.

(2) Handle to swivel the induction bowl into working or transport position

(3) Folding cover

(4) Locking mechanism for folding cover

(5) Spray gun for cleaning the induction bowl.

(6) Cleaning nozzle for canisters with pressure plate

(7) Ring line to dissolve and induct crop protection agent and urea.

(8) Scale to show the contents

(9) Switch tap EA

(10) Switch tap EB

(11) Switch tap EC

(12) Sieve

(13) Holder for measuring cup

(14) Dripping holder for empty spray agent canisters

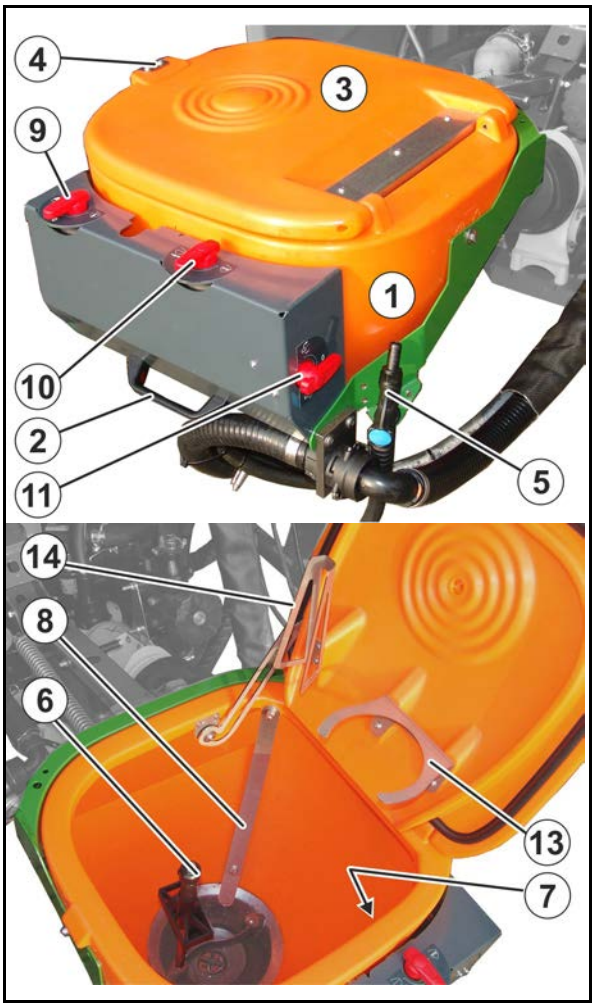

Water escapes from the canister flushing nozzle if

- the pressure plate is pressed down by the canister.
- the closed folding cover is pressed downwards.

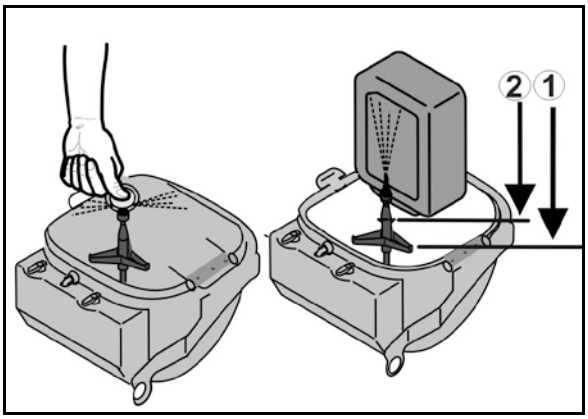

5.2.2 Switch taps on the induction bowl

- **Switch tap (EA)**
  - o External cleaning of induction bowl
  - o Flush in agent with mixing nozzle

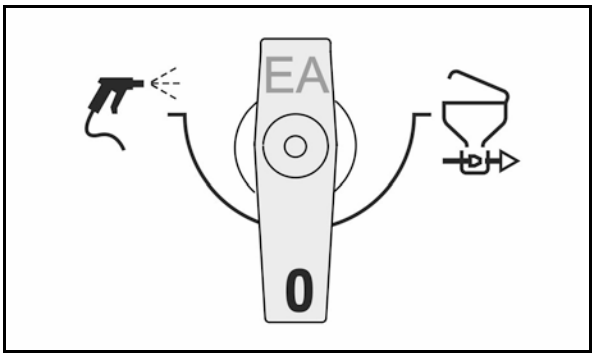

- **Switch tap (EB)**
  - o Clean canister / clean induction bowl
  - o Flushing via ring line

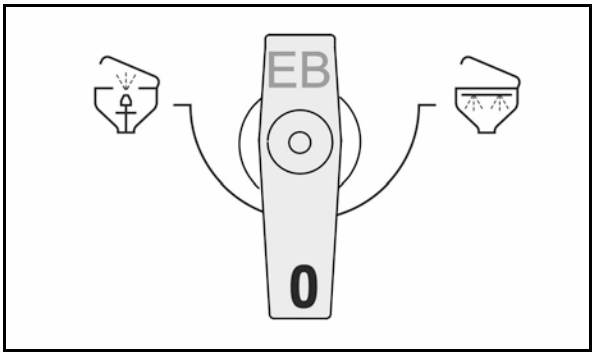

- **Switch tap (EC)**
  - o Suction filling
  - o Pressure filling

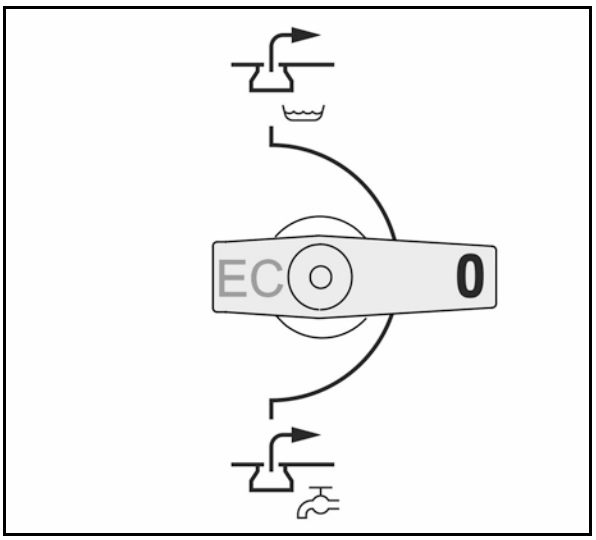

All stop taps are

- open when lever position is in direction of flow
- closed when lever position is transverse to direction of flow

5.3 Parking supports

The implement is equipped with 2 telescopic parking supports.

The implement may only be parked in parking position on the two extended parking supports.

The parking support is moved into parking position or transport position by manually pulling on the rod.

Parking supports in parking position

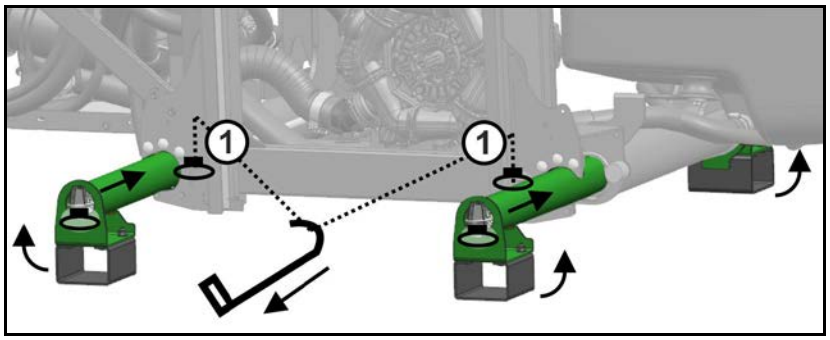

Hook the pulling rod on the lug (1) and pull to move the parking support into transport position.

Parking supports in transport position

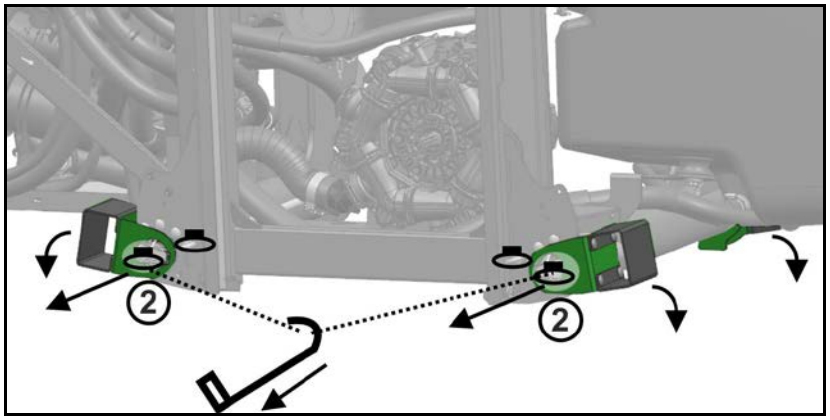

Hook the pulling rod on the lug (2) and pull to move the parking support into parking position.

The parking position of the pulling rod is on the right of the control panel.

5.4 Three-point attachment frame

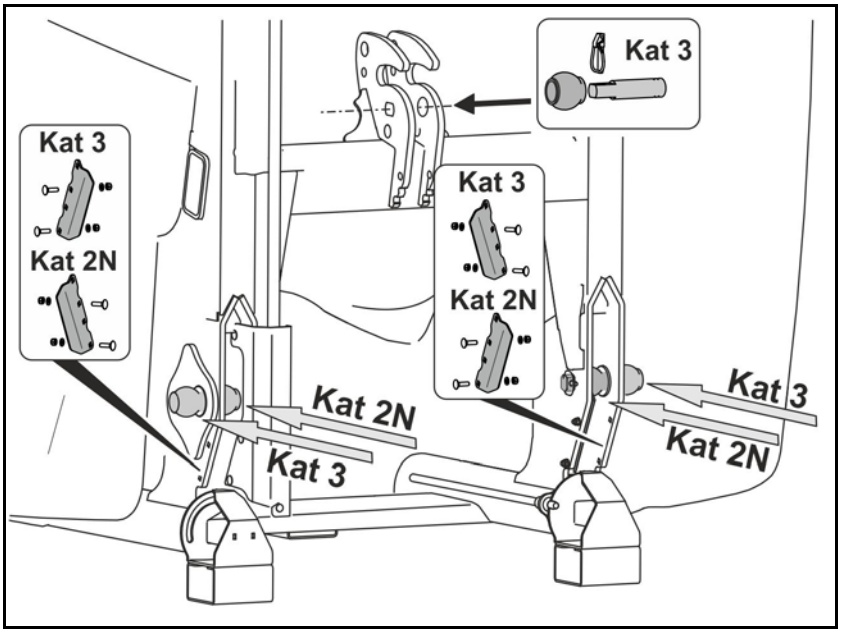

UF1602, UF2002: Choice of mounting category Cat 2N or Cat 3

- Equip Cat 3 top link pin with Cat 3 ball sleeve
- Cat 2N: Couple Cat 3 lower link ball on the inside.
- Cat 3: Couple Cat 3 lower link ball on the outside.
- Bolt on the deflector guide according to the selected mounting category.

5.5 Quick-coupling system

The quick coupling system serves to facilitate mounting the field sprayer on the tractor.

Coupling and transport: Hand lever for the coupling system is raised.		Uncoupling: Hand lever for the coupling system is lowered.
		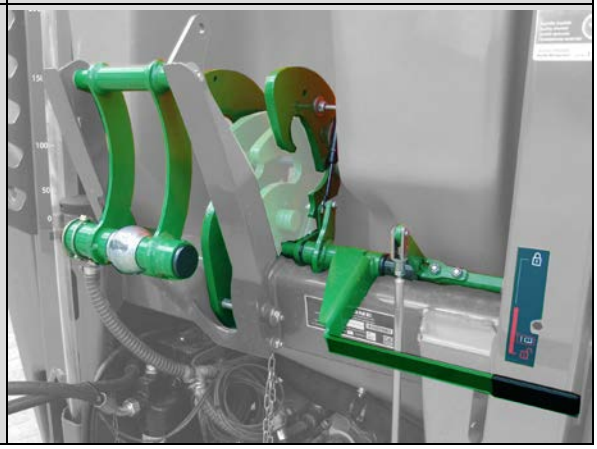

5.6 PTO shaft

The PTO shaft transmits power between the tractor and machine.

- PTO shaft

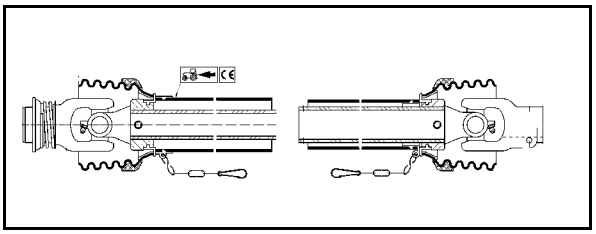

- Telespace PTO shaft (telescoping)

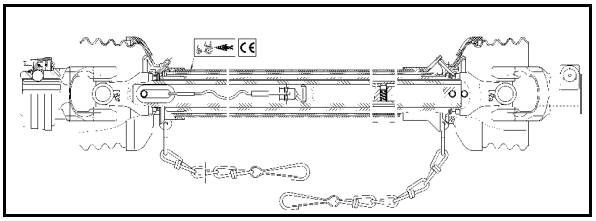

WARNING

Risk of crushing from the tractor and machine unintentionally starting up or rolling.

Only couple or uncouple the PTO shaft and tractor when the tractor and machine have been secured against both unintentional starting and unintentional rolling.

WARNING

Risk of being caught and drawn in by the unguarded PTO shaft or due to damaged safety devices.

- Never use the PTO shaft if the safety device is missing or damaged, or without correctly using the supporting chain.
- Before each use, check that
  - all PTO shaft protective devices are installed and fully functional.
  - the clearance around the PTO shaft is sufficient in all operating positions. Insufficient clearance will result in damage to the PTO shaft.
- Attach the supporting chains in a way that ensures a sufficient swivel range of the PTO shaft in all operating positions. Supporting chains must not become caught on machine or tractor parts.
- Have any damaged or missing parts of the PTO shaft replaced immediately with genuine parts from the PTO shaft manufacturer.
  Note that only a specialist workshop may repair a PTO shaft.
- With the machine uncoupled, place the PTO shaft in the holder provided. This protects the PTO shaft from damage and dirt.
  - Never use the supporting chain of the PTO shaft to suspend the uncoupled PTO shaft.

WARNING

Risk of being caught and drawn in by unguarded PTO shaft parts in the power transmission area between the tractor and driven machine.

Work only when the drive between the tractor and driven machine is fully guarded.

- The unguarded parts of the PTO shaft must always be guarded by a shield on the tractor and a PTO shaft guard on the machine.
- Check that the shield on the tractor or the PTO shaft guard on the machine and the safety devices and guards of the extended PTO shaft overlap by at least 50 mm. If they do not, you must not power the machine via the PTO shaft.

- Use only the PTO shaft provided or one of the same type.
- Read and follow the operating manual provided for the PTO shaft. Correct use and maintenance of the PTO shaft prevents serious accidents.
- When coupling the PTO shaft
  - refer to the operating manual provided for the PTO shaft.
  - observe the permissible drive speed of the machine.
  - observe the correct installation length of the PTO shaft. Refer to the section "Adjusting the length of the PTO shaft to the tractor", page **116**.
  - observe the correct installation position of the PTO shaft. The tractor symbol on the protective tube of the PTO shaft identifies the tractor-side connection of the PTO shaft.
- Always mount the overload or freewheel clutch on the machine if the PTO shaft has an overload or freewheel clutch.
- Before switching on the universal joint shaft, read and follow the safety precautions for universal joint shaft operation in the section "Safety information for the user", page 32.

5.6.1 Coupling the PTO shaft

WARNING

Risk of crushing or impact if there is insufficient clearance when coupling the PTO shaft.

Couple the PTO shaft with the tractor before coupling the machine with the tractor. This will ensure the necessary clearance for safe coupling of the PTO shaft.

1. Drive the tractor up to the machine, leaving a clearance (approx. 25 cm) between the tractor and the machine.
2. Secure the tractor against unintentional starting and rolling, see the section "Securing the tractor against unintentional starting and rolling", starting on page **113**.
3. Check whether the tractor universal joint shaft is switched off.
4. Clean and grease the tractor universal joint shaft.
5. Fit the latch of the PTO shaft over the universal joint shaft of the tractor until the latch is heard to engage. When coupling the PTO shaft, refer to the operating manual provided for the PTO shaft and observe the permissible universal joint shaft speed of the machine.
6. Secure the PTO shaft guard using the supporting chain(s) to prevent movement.
   - 6.1 Fasten the supporting chain(s) so that it as perpendicular to the PTO shaft as possible.
   - 6.2 Attach the supporting chain(s) in a way that ensures sufficient swivel range of the PTO shaft in all operating positions.

CAUTION

Supporting chains must not become caught on machine or tractor parts.

7. Check that there is sufficient clearance around the PTO shaft in all operating conditions. Insufficient clearance will result in damage to the PTO shaft.
8. Provide the necessary clearance (if required).

5.6.2 Uncoupling the PTO shaft

WARNING

Risk of crushing or impact if there is insufficient clearance when uncoupling the PTO shaft.

First uncouple the machine from the tractor before uncoupling the PTO shaft from the tractor. This will ensure the necessary clearance for safe uncoupling of the PTO shaft.

CAUTION

Risk of burning on hot components of the PTO shaft.

This danger can cause minor to serious injuries to the hands.

Do not touch components of the PTO shaft that have become hot (particularly clutches).

1. Uncouple the machine from the tractor. Refer to the section "Uncoupling the machine", page 117.
2. Drive the tractor up to the machine, leaving a clearance of approximately 25 cm between the tractor and the machine.
3. Secure the tractor against unintentional starting and rolling, see the section "Securing the tractor against unintentional starting and rolling", starting on page 113.
4. Pull the latch of the PTO shaft off the universal joint shaft of the tractor. Observe the operating manual supplied with the PTO shaft when uncoupling the PTO shaft.
5. Place the PTO shaft in the holder provided.
6. Clean and lubricate the PTO shaft if it is not going to be used for a longer period of time.

5.7 Hydraulic connections

- All hydraulic hose lines are equipped with grips.

  Coloured markings with a code number or code letter have been applied to the gripping sections in order to assign the respective hydraulic function to the pressure line of a tractor control unit!

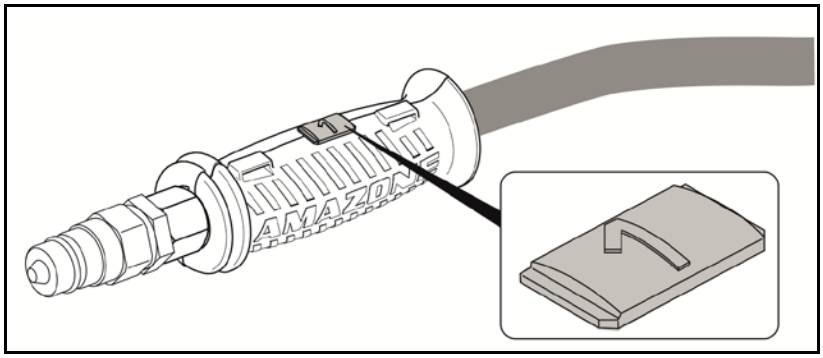

  Films are stuck on the implement for the markings that illustrate the respective hydraulic function.

- The tractor control unit must be used in different types of activation, depending on the hydraulic function.

Latched, for a permanent oil circulation	∞
Tentative, activate until the action is executed	
Float position, free oil flow in the control unit	∿

Marking		Function			Tractor control unit	
yellow	1		**height adjustment**	raise	Double acting	
	2			lower		
green	1		**boom folding**	fold out	Double acting	
	2			fold in		
natural	1		**tilt adjustment**	lift left-hand boom	Double acting	
	2			lift right-hand boom		

Profi- folding

Marking		Function	Tractor control unit	
red	P	Permanent oil circulation	Single-acting	∞
red	T	Pressure-free return flow		
red	LS	Load sensing control line		

Profi-folding:

Maximum permissible pressure in oil return: 5 bar

Therefore do not connect the oil return to the tractor control unit, but to a pressure-free oil return flow with a large plug coupling.

WARNING

For the oil return, use only DN16 lines and select short return paths.

Pressurise the hydraulic system only when the free return has been correctly coupled.

Install the coupling union (supplied) on the pressure-free oil return flow.

WARNING

Risk of infection from hydraulic fluid escaping at high pressure.

When coupling and uncoupling the hydraulic hose lines, ensure that the hydraulic system is depressurised on both the machine and tractor sides.

If you are injured by hydraulic fluid, contact a doctor immediately.

5.7.1 Coupling the hydraulic hose lines

WARNING

Risk of crushing, cutting, catching, drawing in and impact from faulty hydraulic functions when the hydraulic hose lines are incorrectly connected.

When coupling the hydraulic hose lines, observe the coloured markings on the hydraulic plugs.

- Check the compatibility of the hydraulic fluids before connecting the machine to the tractor hydraulic system.

  Do not mix any mineral oils with biological oils.
- Observe the maximum permissible hydraulic fluid pressure of 210 bars.
- Only couple clean hydraulic connectors.
- Slide the hydraulic connector(s) into the hydraulic sockets until they are heard to engage.
- Check the coupling points of the hydraulic hose lines for correct, tight seating.

1. Swivel the actuation lever on the control valve on the tractor to float position (neutral position).
2. Clean the hydraulic plug for the hydraulic hose lines before connecting them to the tractor.
3. Connect the hydraulic hose line(s) to the tractor control unit(s).

5.7.2 Uncoupling the hydraulic hose lines

1. Swivel the actuation lever on the control unit on the tractor to float position (neutral position).
2. Unlock the hydraulic connectors from the hydraulic sockets.
3. Protect the hydraulic plug and hydraulic socket against soiling using the dust protection caps.
4. Place the hydraulic hose lines in the hose cabinet.

5.8 Operating terminal or manual operation

UF field sprayers with

- AMASET+ manual operation are equipped with a volumetric remote control.

The spread rate can be set by manually adjusting the spray pressure and is directly proportional to the pump drive speed.

- Control terminal or AMASPRAY+ are equipped with a flow meter.

The spread rate is set on the operating terminal.

The operating terminal controls a machine computer, providing it with all the necessary information and taking charge of the area-based regulation of the spray rate [l/ha], depending on the specified spray rate (target rate) and the current operational speed [km/h].

5.8.1 Control terminal

The Control terminal can be used to:

- enter machine-specific data.
- enter job-related data.
- cause the field sprayer to change the spray rate used in spraying operation.
- operate all functions on the sprayer boom (Profi-folding only).
- operate special functions.
- monitor the field sprayer during spraying operation.

Once a job has been started, the Control terminal stores the data acquired.

See operating manual for software ISOBUS.

AmaTron 3

AmaPad

AmaTron 4

AmaPad 2

5.8.2 AMASPRAY+

The AMASPRAY+ can be used to:

- enter machine-specific data.
- cause the field sprayer to change the spray rate used in spraying operation.
- preselect hydraulic functions which are operated using the tractor control unit.
- operate special functions.
- monitor the field sprayer during spraying operation.
- switch part width sections on and off

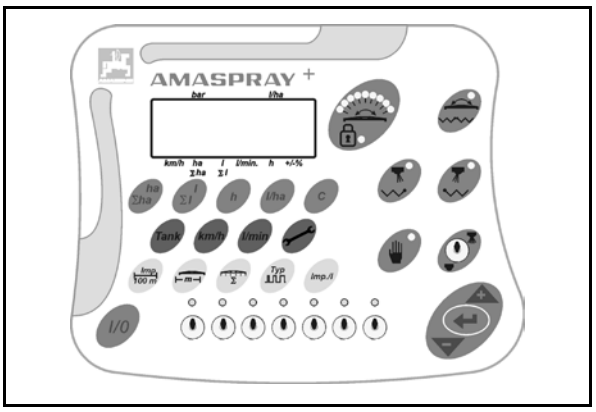

Current spread rate, speed, worked area, total area, quantity applied and overall spread rate, working time and distance travelled are continuously detected.

See also the AMASPRAY+ operating manual.

5.8.3 AMASET+

The AMASET+ can be used to:

- display the spray pressure
- set the spray pressure
- control end/boundary nozzles
- switch spraying on/off
- **fold in** the left/right sprayer boom individually
- switch part width sections on and off

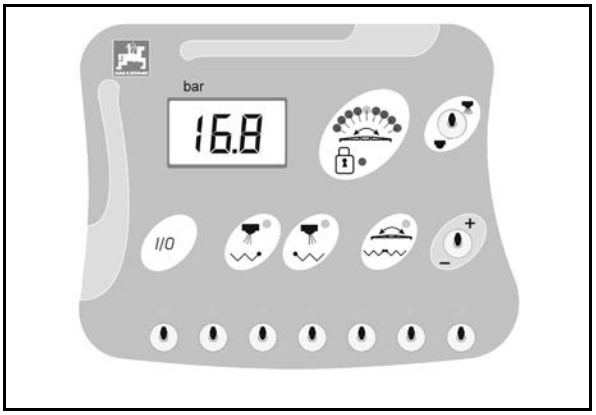

See also the AMASET+ operating manual.

5.9 AmaPilot / AmaPilot+ multi-function stick

All of the implement functions can be performed using the AmaPilot and AmaPilot+.

- AmaPilot with fixed key assignment
- AmaPilot+ is an AUX-N control element with freely assignable key assignment (keys pre-assigned like for the AmaPilot)

36 functions can be selected by pressing with your thumb. Two additional levels can also be switched on.

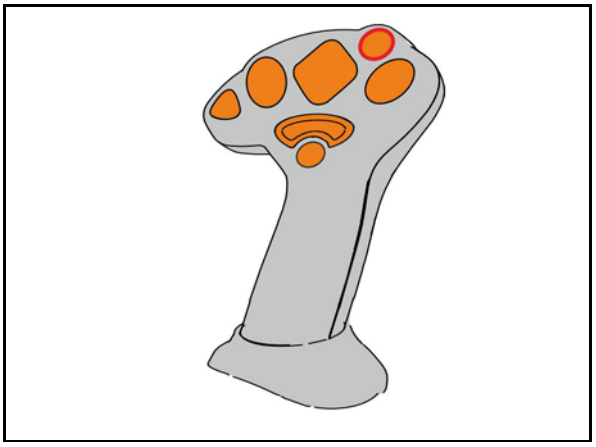

5.10 Spray liquid tank

(1) Spray liquid tank

The spray liquid tank is filled via

- the filling opening on the filling dome,
- the suction hose on the suction port,
- the pressure port

(2) Hinged/screw lid for the filling opening

(3) Fill level indicator

(4) Step-up handle

(5) Step

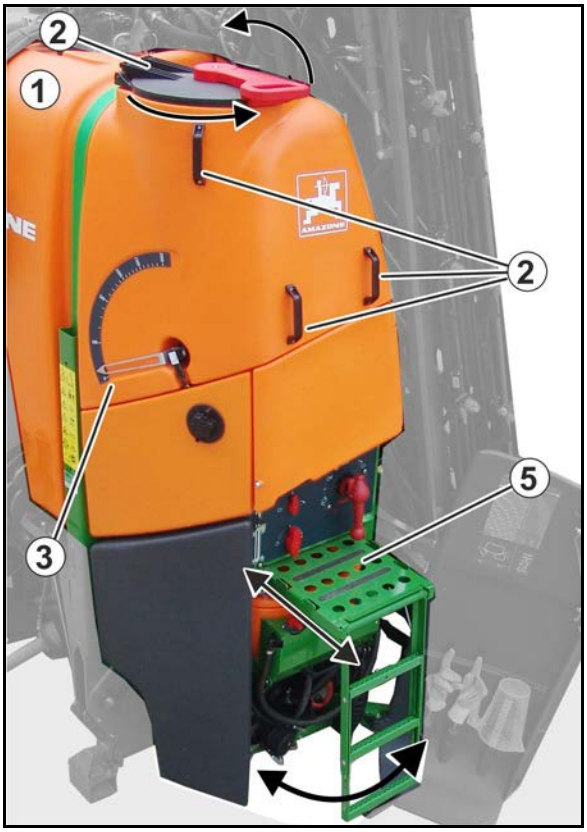

Screw lid for the filling opening

- To open the lid, rotate to the left and swing open.
- To close the lid, fold down and rotate to the right until tight.

5.10.1 Step

Pull-out step to reach the filling dome.

- To climb up, pull out the ladder with platform and fold down the ladder.
- If the ladder is no longer needed, swing it up and slide it under the control terminal, along with the platform.

Make absolutely sure that the step is locked in its end position when slid away.

DANGER

- **Never climb into the spray liquid tank.**
- **Risk of injury from poisonous vapours.**
- **It is strictly forbidden to ride on the field sprayer.**
- **Riding on the machine creates a risk of falling.**

5.10.2 Suction port for filling the spray liquid tank (optional)

Observe the relevant instructions when filling the spray liquid tank from public water points using the suction hose.

(1) Suction hose.

(2) Quick coupling.

(3) Suction filter for filtering the intake water.

(4) Non-return valve. Prevents liquid already in the spray liquid tank from running out if the vacuum suddenly collapses during the filling process.

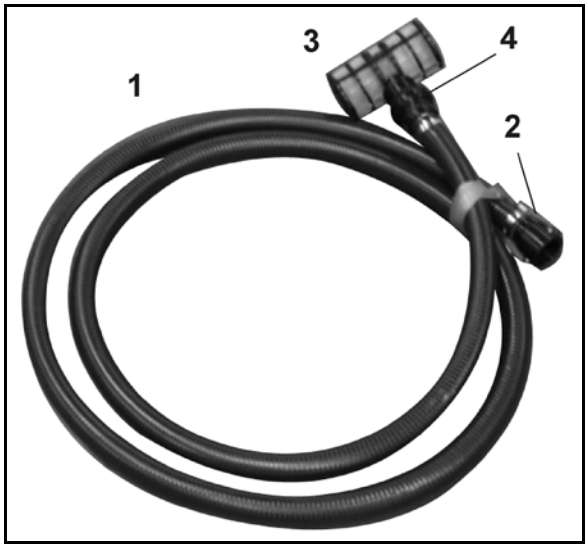

Suction hose holder on the Super-S boom

- When not in use, attach the suction hose in the holder.
- Clean the suction hose before use if it was contaminated with spray agent.

5.11 Spülwassertank

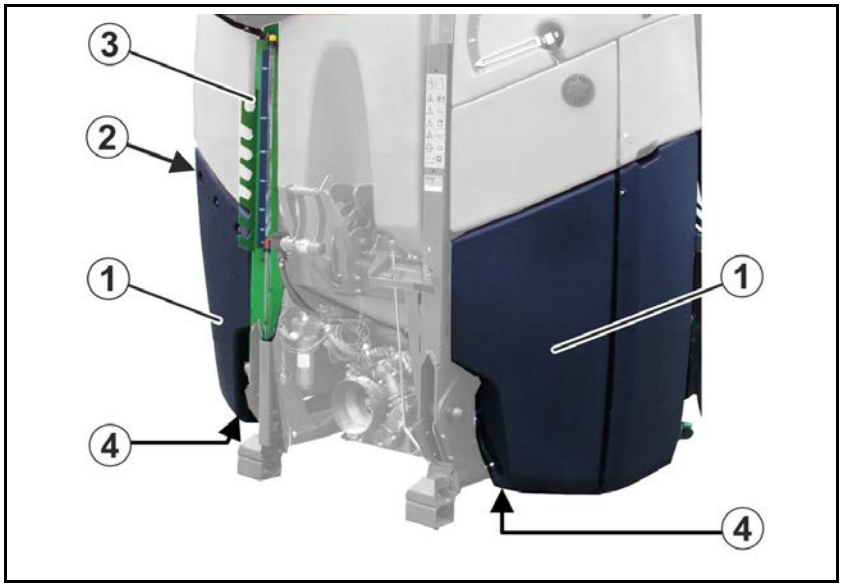

(1) Flushing water tank

(2) Filling opening

(3) Filling level indicator

(4) Draining

The flushing water tank introduces clear fresh water to the mixture. The water serves to

- thin the residue in the spray liquid tank at the end of spraying operation.
- clean (flush) the whole field sprayer in the field.
- clean the suction chest and the spray lines when the tank is full.

Screw lid with breather valve for the fill opening.

Füllen Sie nur klares Wasser in die Spülwassertank.

5.12 Hand wash facility

Hand wash facility (18 l) with clear fresh water to clean hands or spraying nozzles.

(1) Hand wash tank

(2) Stop tap

(3) Soap dispenser

(4) Discharge

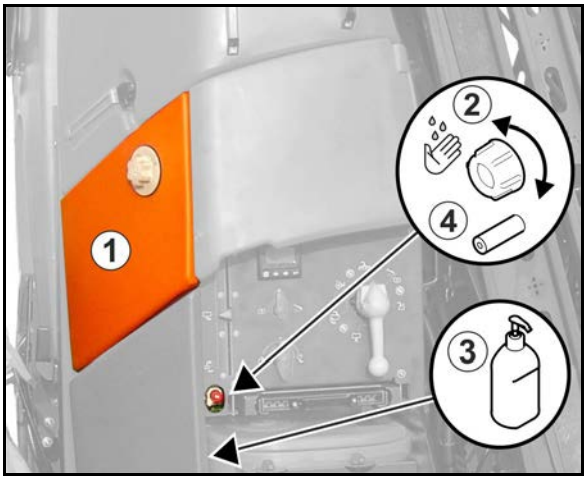

Before using the hand wash facility, fold down the induction bowl and open the cover to collect the wash water.

Only fill the fresh water tank with clear fresh water.

WARNING

Danger of poisoning from using unclean water in the fresh water tank.

Never use the water from the fresh water tank as drinking water. The materials used to construct the fresh water tank are not food-safe.

5.13 Pump equipment

Spraying pump

The spraying pump is also used to mix the spray liquid.

It is driven by the tractor PTO shaft via the universal joint shaft, is self-priming and dry running-proof.

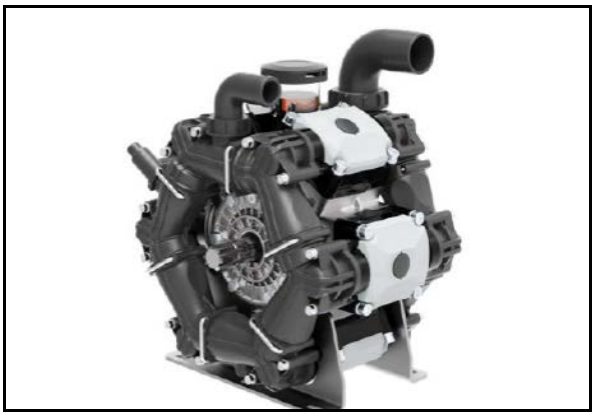

Flushing water pump for continuous internal cleaning

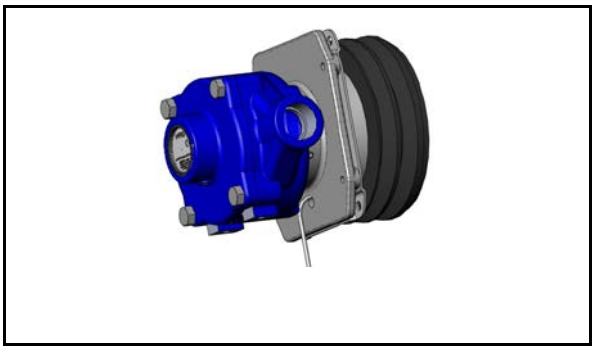

The continuous internal cleaning is switched from the tractor:

- Using a rocker switch
-

using the ISOBUS control terminal

The flushing water pump is driven by the spraying pump using a belt drive.

The pump is not self-priming, not dry running-proof, and must be drained in the winter.

The pump can only be operated when the flushing water tank is full. It is monitored by a float switch.

5.14 Filter equipment

- Use all the filters provided. Clean the filters regularly (see the "Cleaning" section, **Seite 164**). Fault-free field sprayer operation can only be achieved by correct filtering of the spray liquid. Correct filtering has a significant effect on the success of the crop protection measures.
- Pay attention to the permissible combinations of filters and mesh sizes. The mesh sizes for the self cleaning pressure filter and the nozzle filters must always be smaller than the nozzle opening of the nozzles in question.
- Ensure that the use of pressure filter inserts with 80 or 100 mesh/inch for some crop protection agents can filter out active agents. In individual cases, enquire with crop protection agent manufacturers.

5.14.1 Filling sieve

The filling sieve prevents the spray liquid from being contaminated when the spray liquid tank is being filled via the filling dome.

Filter area: 3,750 mm²

Mesh size: 1.00 mm

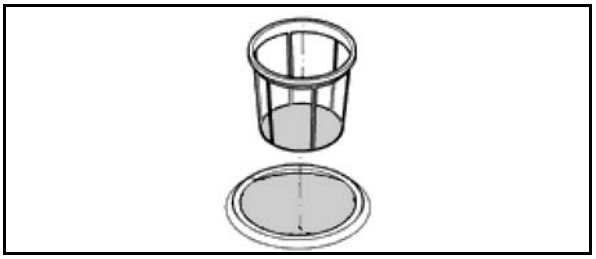

5.14.2 Suction filter

The suction filter (1) filters

- the spray liquid during the spraying operation.
- the water when filling the spray liquid tank via the suction hose.
- the water during the rinsing process.

Filter area: 660 mm²
Mesh size: 0.60 mm

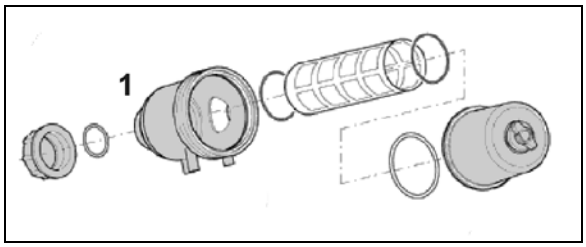

5.14.3 Self cleaning pressure filter

The self cleaning pressure filter

- prevents the nozzle filter upstream of the spraying nozzle from becoming blocked.
- has a greater mesh count/inch than the suction filter.

With the hydraulic agitator switched on, the inside surface of the pressure filter insert is constantly rinsed through, and undissolved particles of spraying agent and dirt are conveyed back into the spray liquid tank.

Overview of the pressure filter inserts

- 50 mesh/inch (standard), blue
  for nozzle size '03' and larger
  Filter area: 216 mm²
  Mesh size: 0.35 mm
- 80 mesh/inch, yellow
  for nozzle size '02'
  Filter area: 216 mm²
  Mesh size: 0.20 mm
- 100 mesh/inch, green
  for nozzle size '015' and smaller
  Filter area: 216 mm²
  Mesh size: 0.15 mm

5.14.4 Nozzle filters

The nozzle filters (1) prevent the spraying nozzle from becoming blocked.

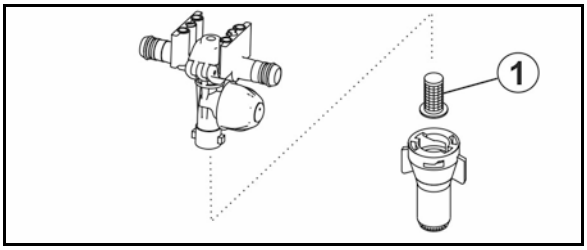

Overview of the nozzle filters

- 24 mesh/inch,
  for nozzle size '06' and larger
  Filter area: 5.00 mm²
  Mesh size: 0.50 mm
- 50 mesh/inch (standard),
  for nozzle size '02' to '05'
  Filter area: 5.07 mm²
  Mesh size: 0.35 mm
- 100 mesh/inch,
  for nozzle size '015' and smaller
  Filter area: 5.07 mm²
  Mesh size: 0.15 mm

5.15 Exterior wash down kit (optional)

Exterior wash down kit for cleaning the field sprayer, includes

(1) Hose coiler,

(2) 20 m pressure hose,

(3) Spray gun

Operating pressure: 10 bar

Water output: 18 l/min

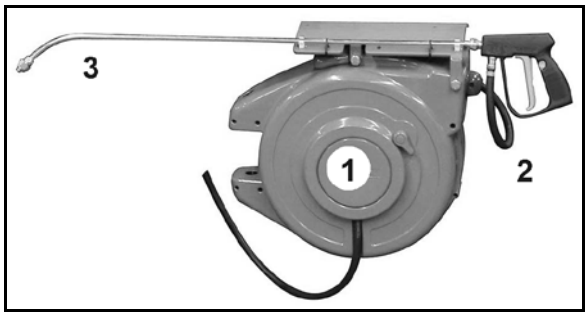

WARNING

Danger from liquids escaping under pressure and contamination with spray liquid if the spray gun is activated accidentally.

Secure the spray gun against unintentional spraying using the locking mechanism (1)

- before each pause in spraying.
- before depositing the spray gun in its holder after cleaning work is complete.

5.16 Transport box

Transport box for protective clothing with separate compartments for clean and contaminated clothes

(1) Transport box opener

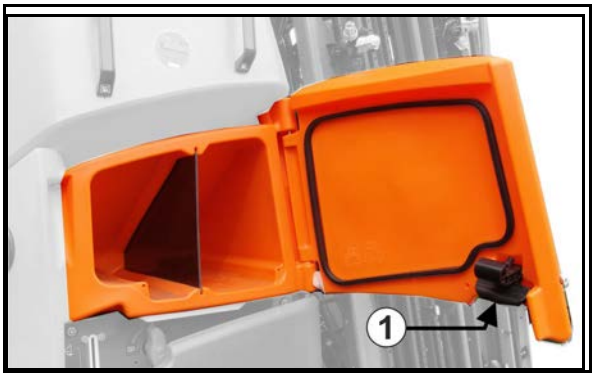

5.17 Work lights

2 variants:

- Separate power supply from the tractor is required, operation via the control box.
- Power supply and operation via ISOBUS.

Work floodlights:

LED-individual nozzle illumination:

5.18 FT 1001 front tank

The **FT 1001** has a tank capacity of 1,000 l and is fitted to the tractor's front hydraulic system.

5.19 Camera system

WARNING

Risk of injury or even death.

If the camera display only is used for manoeuvring, persons or objects can be overlooked. The camera system is an aid. It does not replace the operator's awareness of the immediate surroundings.

- **Before manoeuvring, ensure that there are no people or objects in the manoeuvring area by taking a direct look**

The implement can be equipped with a camera (1).

Features:

- Viewing angle of 135°
- Heater and lotus coating
- Infrared night-view technology
- Automatic backlight compensation

(1) Camera on the sprayer boom for reversing safely.

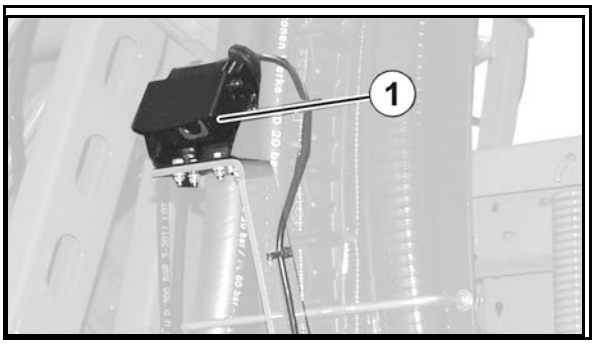

(1) Camera on the front tank for manoeuvring safely.

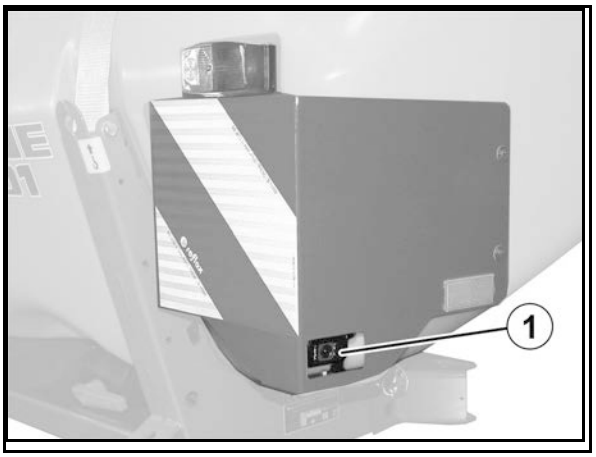

6 Construction and function of the sprayer boom

WARNING

Risk of injury for people due to impact with the sprayer boom when

- **the boom sections swivel to the sides when folding**
- **tilting, lifting or lowering**

Instruct people to leave the danger area of the machine before you operate the sprayer boom.

The proper condition of the sprayer boom and how it is suspended have considerable influence on the distribution accuracy of the spray liquid. With the spraying height of the sprayer boom to the crop set correctly, a complete overlap is achieved. Nozzles are attached to the boom at intervals of 50 cm (alternatively 25 cm).

Profi-folding:

The boom is operated via the control terminal.

To do this, locate tractor control unit *red* during use.

See operating manual for software ISOBUS.

Depending on the implement equipment, the following functions can be performed via the boom kinematics function group.

- Folding the sprayer boom in and out,
- Hydraulic height adjustment,
- Hydraulic tilt adjustment,
- Folding in one side of the sprayer boom
- One-sided, independent raising and lowering of the sprayer boom / boom extension (Profi-folding II only).

Folding via the tractor control unit

The boom is operated via tractor control units.

- Depending on the version, sprayer boom folding is preselected via the operating terminal and then executed using tractor control unit *green* (preselected folding).

  See operating manual for software ISOBUS.
- Height adjustment is controlled via tractor control unit *green*.

Folding out and in

CAUTION

It is prohibited to fold the sprayer boom in and out during travel.

DANGER

Always maintain an adequate distance from overhead cables when folding the sprayer boom out and in. Contact with overhead cables may lead to fatal injuries.

WARNING

Risk of crushing the entire body and impact due to personnel becoming trapped by laterally-swivelling machine parts.

These dangers can cause extremely serious and potentially fatal injuries.

Maintain an adequate safety distance from moving machine parts while the tractor engine is running.

Ensure that all personnel maintain an adequate safety distance from moving machine parts.

Instruct personnel to leave the swivel range of any moving machine parts before swivelling the parts.

WARNING

Danger for third parties from crushing, being drawn in and/or caught by the moving parts of the boom or impact if they stand in the swivel range of the boom while it is folding out or in.

- Instruct personnel to leave the swivel range of the boom before you fold the boom out or in.
- Release the control for folding the boom out and in immediately if someone enters the swivel range.

The hydraulic cylinders for boom folding maintain their respective end positions (transport position and working position) in both the folded-in and folded-out boom state.

Working with the sprayer boom folded out on one side

Working with the sprayer boom only folded out on one side is only permissible

- **with the swing compensation locked.**
- only if the other boom is folded down as a package from the transport position (Super S boom).
- briefly for passing obstacles (trees, electricity pylons, etc.).

- Lock the swing compensation before folding up the sprayer boom on one side.

  If the swing compensation is not locked, the sprayer boom may swing off to one side. If the folded-up boom strikes the ground, this may cause damage to the sprayer boom.
- Use a significantly reduced speed for spraying operation to avoid the sprayer boom swinging out and coming into contact with the ground with the swing compensation locked. Unless the sprayer boom is guided smoothly, even lateral distribution cannot be guaranteed.

Setting the spraying height

WARNING

Risk of crushing and impact for personnel who are caught while the height of the sprayer boom is being raised or lowered.

Direct people out of the danger area of the machine before raising or lowering the sprayer boom using height adjustment.

1. Direct people out of the danger area of the machine.
2. Set the spraying height in accordance with the spray table via the

- tractor control unit *yellow* ,
- Control terminal (with Profi-folding).

Always align the sprayer boom parallel to the ground; only then can the specified spraying height be achieved on all nozzles.

Collision protection devices

The collision protection devices protect the sprayer boom from damage when the outer boom section comes up against fixed obstacles. The respective plastic clutch allows the outer boom section to avoid collision by moving around the articulated axle, in and against the direction of travel; it is then automatically returned to its working position.

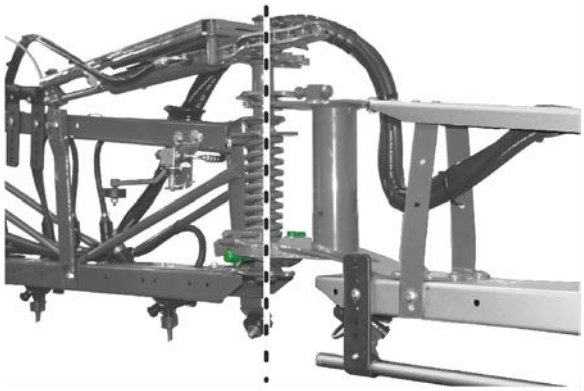

Swing compensation

(1) Swing compensation unlocked.

(2) Swing compensation locked.

For illustration purposes, in this image the protective device has been removed from the swing compensation.

The locking mechanism for the vibration compensation is displayed on the control terminal.

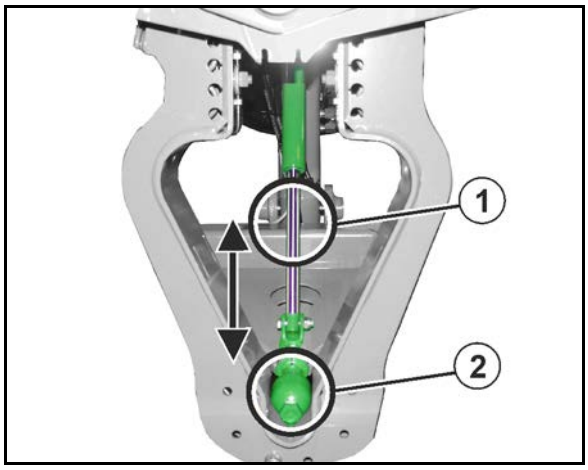

Unlocking the swing compensation:

Even lateral distribution can only be achieved with the swing compensation unlocked.

After the sprayer boom is fully folded out, actuate the operating lever for another 5 seconds.

→ The swing compensation unlocks and the folded-out sprayer boom can swing freely in relation to the boom carrier.

Locking the swing compensation:

- **For road transport**
- **When folding the boom out and in.**

Folding via the tractor control unit *green*: the swing compensation locks automatically before the boom folds in.

6.1 Super-S boom

Overview Super-S-boom

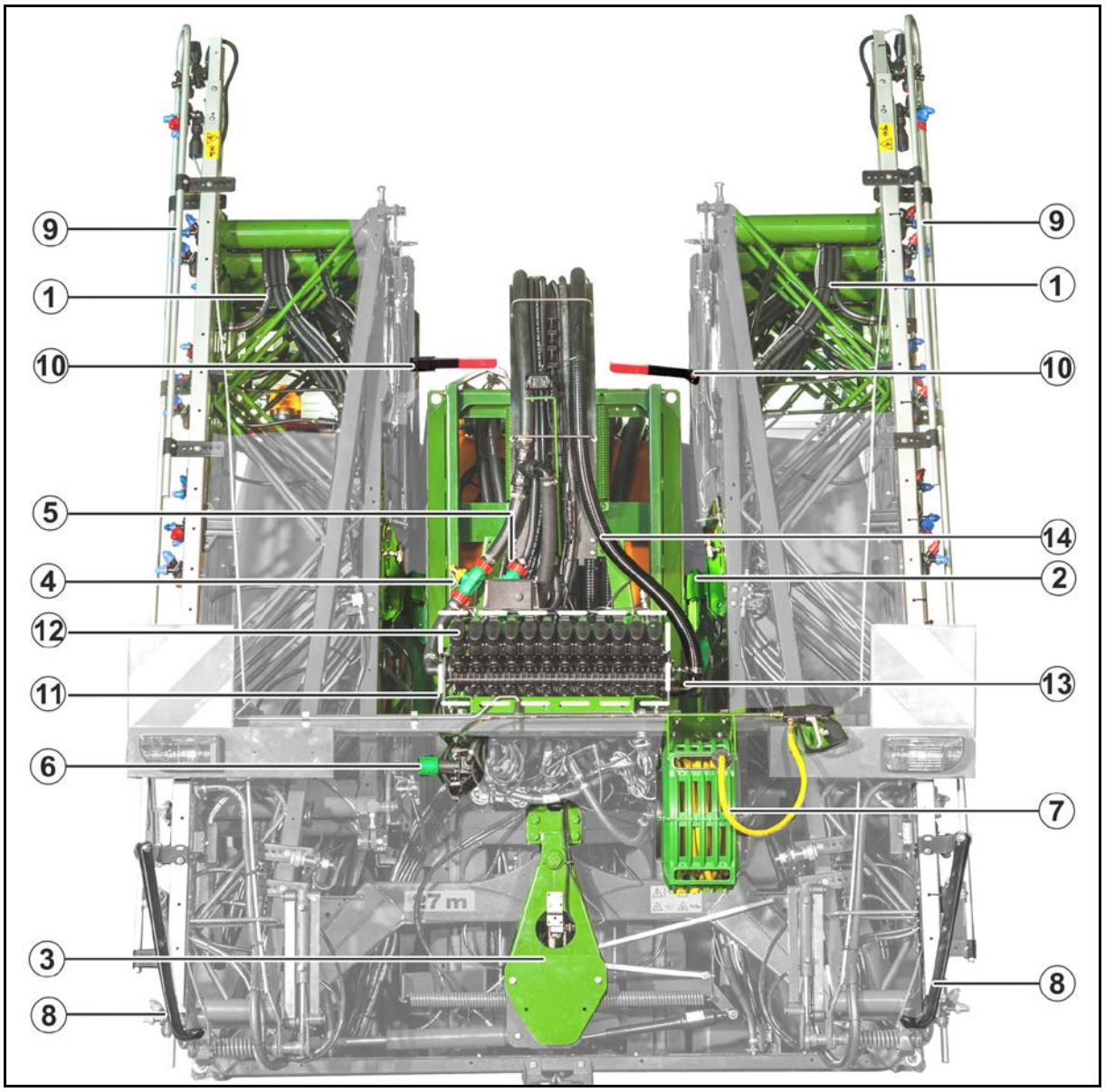

(1) Spray lines

(2) Transport lock

(3) Un-lockable and lockable vibration compensation

(4) Flow meter for determining the application rate [l/ha] (only with rate control)

(5) Return flow meter for determining the quantity of spray liquid delivered back to the spray liquid tank (only with control terminal)

(6) Valve and reverse tap for DUS system

(7) External cleaning

(8) Spacer

(9) Nozzle pipe protection

(10) Visual check of the locking mechanism for the Super-S boom

Part-width section control (alternatively single nozzle control)

(11) Motor valves for switching the part-width sections on and off (operating valve chest)

(12) Bypass valve

(13) Pressure connection for the spraying-pressure pressure gauge

(14) Pressure relief, relieves the overpressure in the spray lines after switching off a part-width section

6.1.1 Spacer

The spacer prevents collisions of the boom with the ground.

When using certain nozzles, the spacers are within the spray cone.

In this case, attach the spacers horizontally on the carrier.

Use thumb bolts.

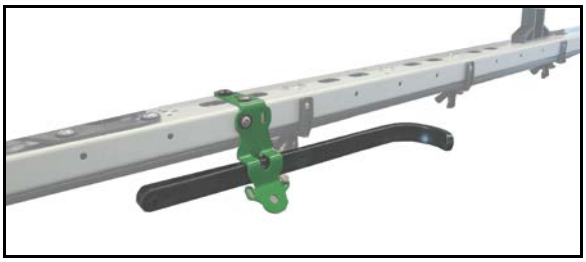

6.1.2 Unlocking and locking the transport safety catch

WARNING

Risk of crushing and impact for other road users if the boom accidentally unfolds from the transport position during road transport.

Lock the folded boom package in the transport position using the transport safety catch before undertaking road transport.

Unlocking the transport safety catch

Raise the sprayer boom using height adjustment until the catching lugs (1) are released from the catching sockets (2).

→ The transport safety catch unlocks the sprayer boom from the transport position.

The figure shows the unlocked sprayer boom.

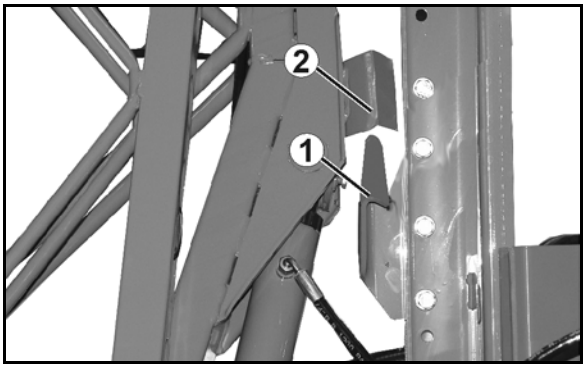

Locking the transport safety catch

Lower the sprayer boom fully using height adjustment until the catching lugs (1) are grasped by the catching sockets (2).

→ The transport safety catch locks the sprayer boom in the transport position.

The figure shows the locked sprayer boom.

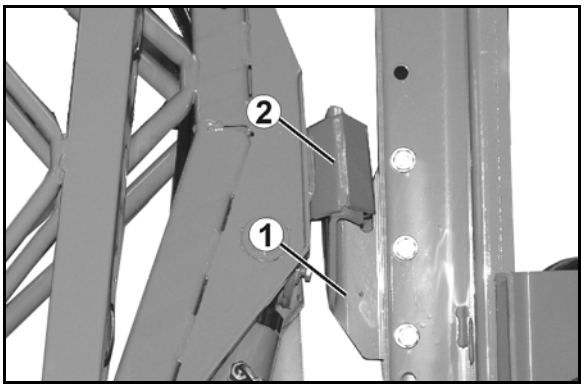

Visually check the locking mechanism for the Super-S boom.

Align the sprayer boom using the tilt adjustment if the catching hooks do not engage in the catching sockets.

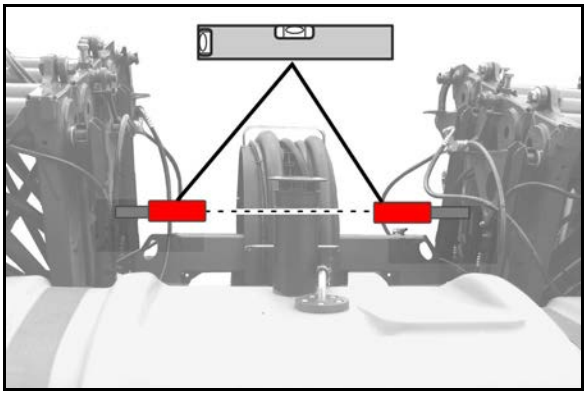

6.1.3 Super-S boom, folding via the tractor control unit

For information on **Profi-folding**, See operating manual for software ISOBUS.

To fold out the sprayer boom, depending on the version, the preselection button "Fold sprayer boom" must be pressed on the operating terminal before tractor control unit *green* is actuated.

See operating manual for software ISOBUS.

Folding out the sprayer boom

1. Actuate **tractor control unit** *yellow* .

→ Raise the boom to unlock it from its transport position.

2. Actuate **tractor control unit** *green* until

→ both boom packages are folded out

→ the individual segments of the two booms are fully folded out and

→ the swing compensation is unlocked.

- The appropriate hydraulic cylinders lock the boom in its working position.
- Folding out does not always happen symmetrically.

3. Actuate **tractor control unit** *yellow*

→ Set the spraying height for the sprayer boom.

Folding in the sprayer boom

1. Actuate **tractor control unit** *yellow*

→ Raise the sprayer boom to a medium height.

2. Set tilt adjustment to "0" (if present).
3. Actuate **tractor control unit** *green* until

→ the individual segments of the two booms are fully folded in.

→ the two boom packages are folded in.

4. Actuate **tractor control unit** *yellow*.

→ Lower the boom, locking it in the transport position.

The swing compensation locks automatically before the boom folds in.

Working with the sprayer boom folded out on one side

Only possible with hydraulic preselected folding (optional).

See operating manual for software ISOBUS.

The sprayer boom is fully folded out.

1. Actuate tractor control unit.

→ Raise the boom to a medium height.

→ Swing compensation locks automatically.

2. Preselect the boom on the operating terminal which is to be folded in.
3. Actuate tractor control unit *green*.

→ The selected boom folds in.

WARNING

After folding in, the boom lifts into the transport position.

→ **Interrupt the folding process at the right point.**

4. Align the sprayer boom using tilt adjustment so it is parallel to the target surface.
5. Set the spraying height for the sprayer boom such that the sprayer boom is a minimum of 1 m off the ground.
6. Switch off the part width sections of the folded-in boom.
7. During spraying operation, drive at a significantly reduced speed.

After one-sided spraying:

8. Cancel the preselection on the operating terminal.
9. Actuate tractor control unit *green* until

→ the folded-in boom is fully folded out again.

→ the swing compensation unlocks.

10. Switch all part width sections back on.

6.2 Reduction joint on the outer boom (optional)

Using the reduction joint, the outer element of the outer boom can be folded manually to reduce the working width.

Case 1:

Number of nozzles outer part width section	=	Number of nozzles on the foldable outer element

→ When spraying with a reduced working width, keep the outer part width sections switched off.

Case 2:

Number of nozzles outer part width section	≠	Number of nozzles on the foldable outer element

→ Close the outer nozzles manually (triple nozzle head).

→ Perform changes on the control terminal.

- o Enter the changed working width.
- o Enter the changed number of nozzles on the outer part width sections.

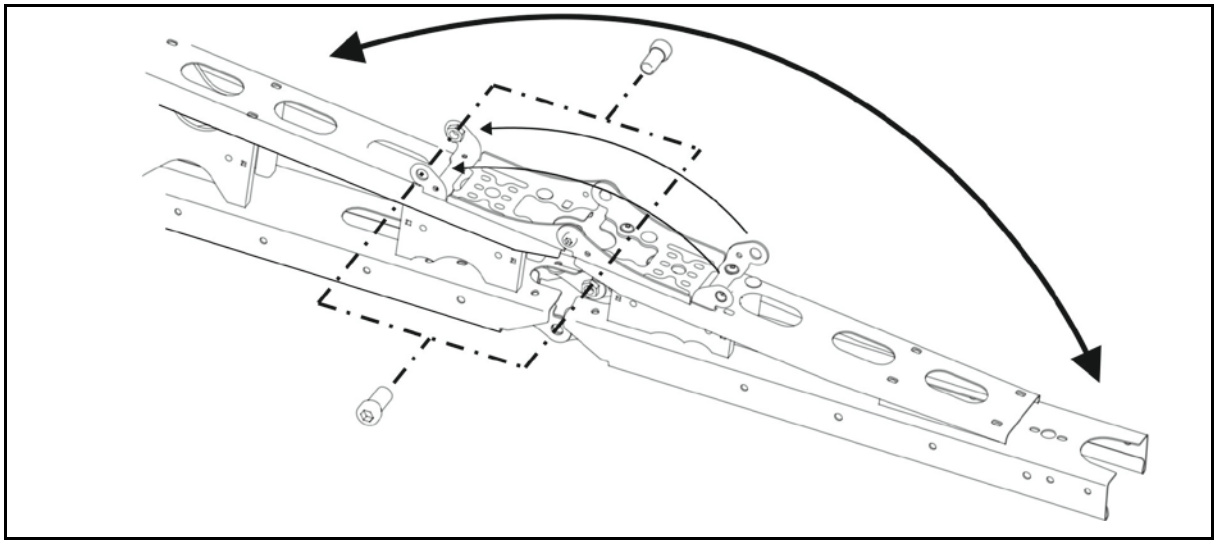

2 bolts lock the folded and unfolded outer element in its respective end positions.

CAUTION
Before road transport, unfold the outer elements again so that the transport locking mechanism is active when the boom is folded.

6.3 Boom width reduction (option)

With the boom width reduction, one or two booms can remain folded in during operation depending on the version.

In addition, switch on the hydraulic accumulator (optional) as a collision protection.

The respective boom part width sections have to be activated in the on-board computer.

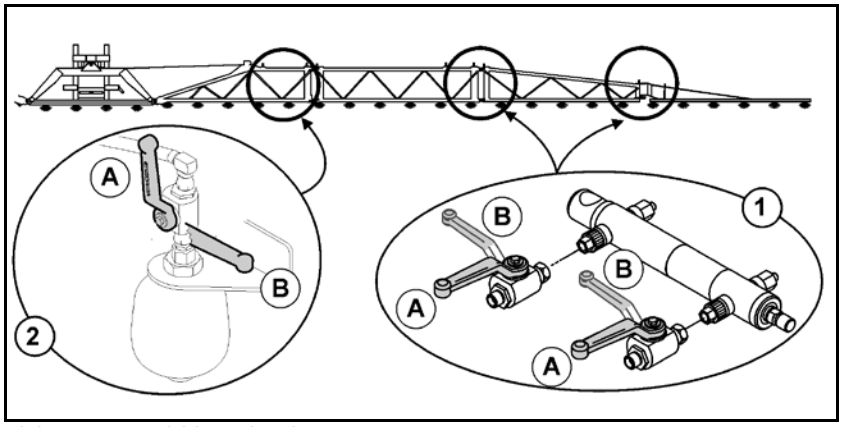

(1) Boom width reduction

(2) Boom width damping (option)

(A) Stop tap opened

(B) Stop tap closed

Working with reduced working width

1. Reduce the boom width hydraulically.
2. Close the stop taps for the boom width reduction.
3. Open the stop tap for the boom damping.
4. Deactivate the respective boom part width sections in the on-board computer.
5. Perform work with reduced working width.

Close the stop tap for the boom damping.

- For road transport
- For use with full working width

Implements with DistanceControl plus:

With reduced working width, install each outer sensor rotated by 180° and disconnect the inner sensor.

DistanceControl plus: Disconnect the inner sensor.

ContourControl: Deactivate the inner sensor (ISOBUS)

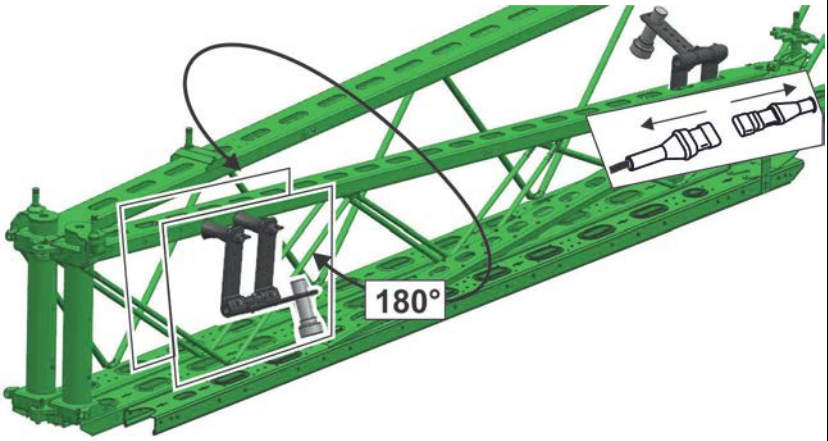

6.4 Boom extension (option)

The boom extension increases the working width infinitely up to 1.20 metres.

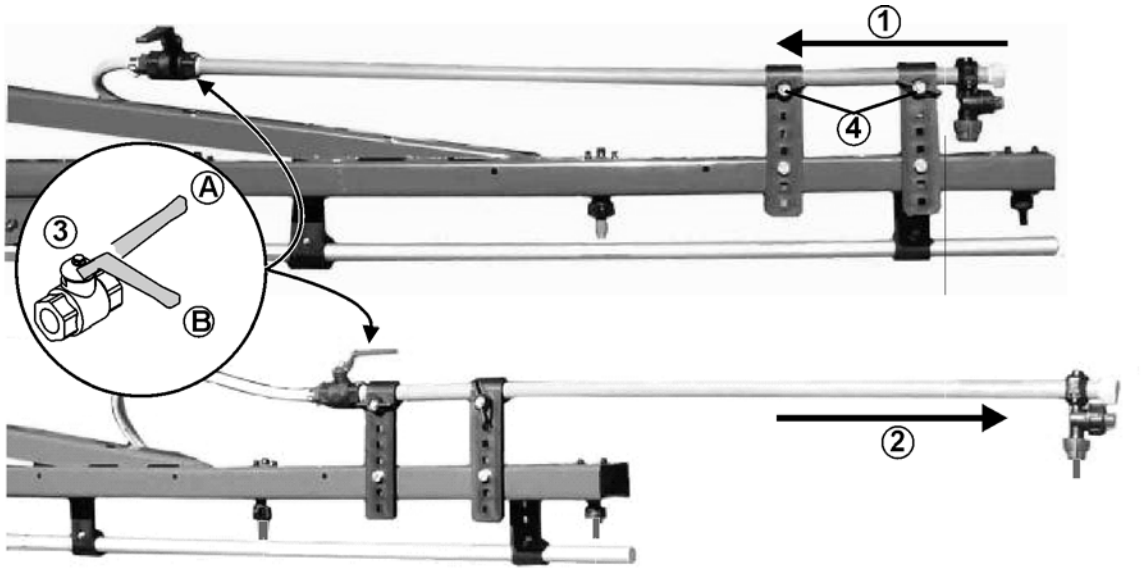

(1) Boom extension in transport position

(2) Boom extension in working position

(3) Stop tap for the outer nozzle

- (A) Stop tap opened
- (B) Stop tap closed

(4) Wing bolts for securing the boom extension in the transport or working position

6.5 Hydraulic tilt adjustment (optional)

In unfavourable ground conditions, e.g. when there are ruts of variable depth or when driving with one side of the vehicle in a furrow, the sprayer boom can be aligned parallel to the ground or to the target surface using hydraulic tilt adjustment.

Associated information is displayed on the operating terminal.

Depending on the model, it is set either via

- the **control terminal** or
- **tractor control unit** *natural*.

See the operating manual for the operating terminal.

6.6 Distance Control

The Distance Control regulating unit for the sprayer boom automatically holds the sprayer boom parallel at the desired distance from the target surface.

Ultrasound sensors (1) detect the distance to the ground or the crop.

When switching off spraying at the headland, the sprayer boom is raised automatically.

When switched back on again, the sprayer boom is lowered back to the calibrated height.

See operating manual for software ISOBUS.

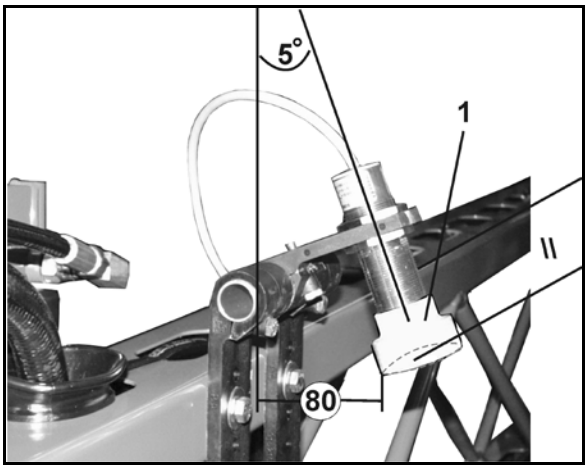

6.7 Spray lines

Spray lines with part-width section valves

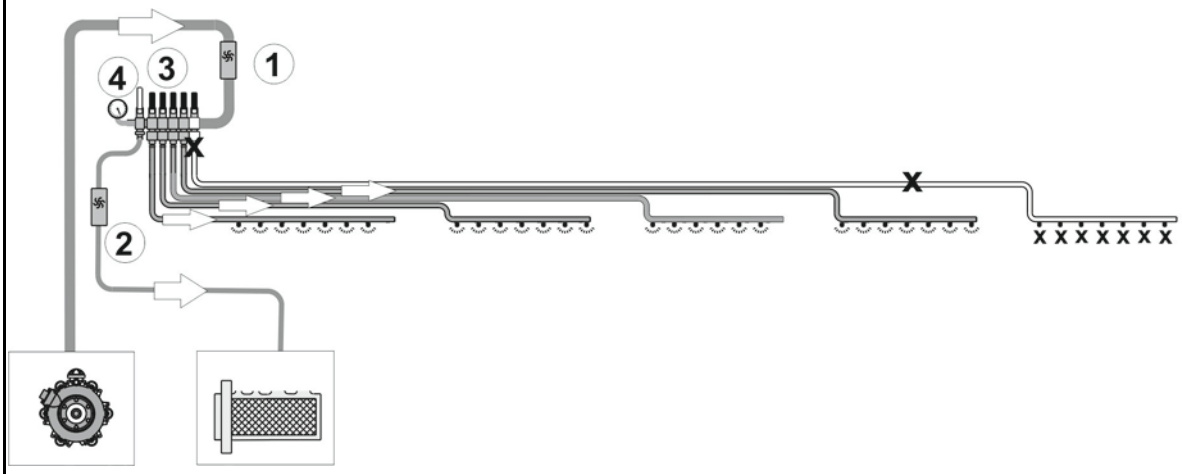

Spray lines with part-width section valves and DUS pressure circulation system

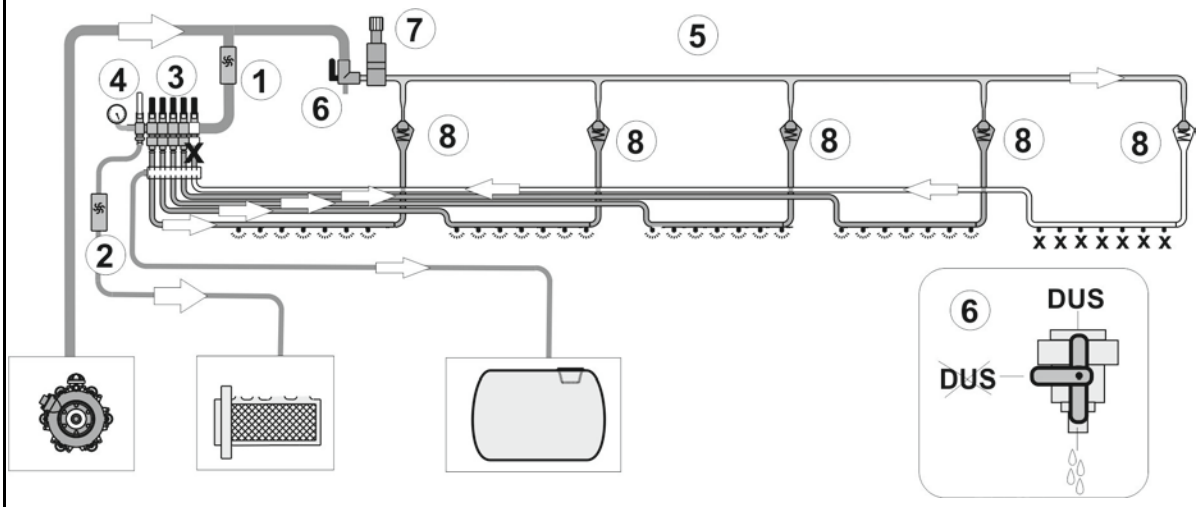

Spray lines with single nozzle control and DUS Pro pressure circulation system

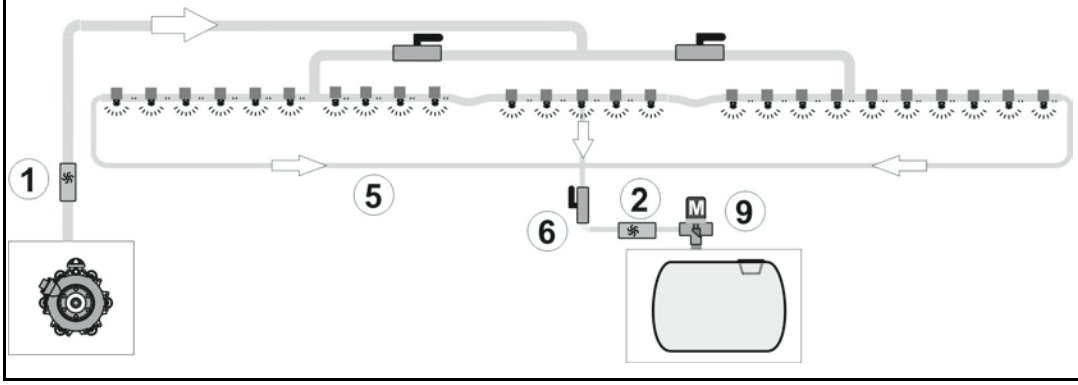

(1) Flow meter
(2) Flow meter
(3) Boom part width section valves
(4) Bypass valve for low application rates
(5) Pressure circulation line
(6) DUS stop tap
(7) Pressure control valve
(8) Check valve
(9) Pressure control valve

DUS pressure circulating system

Part-width section control: Pressure circulating system must generally be switched off when using drag hoses.

The pressure circulating system

- enables the constant circulation of liquid in the spray line. For these purposes, a suction port hose (1) is assigned to each part width section.
- enables operation using spray liquid or flushing water, as desired.
- reduces the undiluted residue for all spray lines to 2 l.

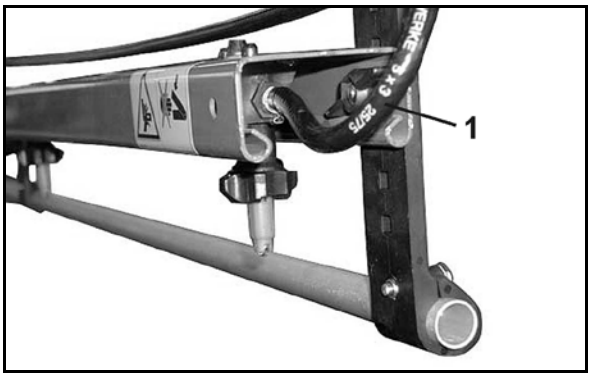

The constant circulation of liquid

- enables production of an even spray pattern right from the start, because spray liquid is available at every spraying nozzle immediately after the sprayer boom is switched on, with no delay.
- prevents damage to the spray line.

Line filter for spray lines (optional

The line filter (1) is

- installed in the spray lines in each part-width section (part-width section control).
- installed in the spray lines on the left and right (single nozzle control)
- an additional measure to prevent contamination of the spraying nozzles.

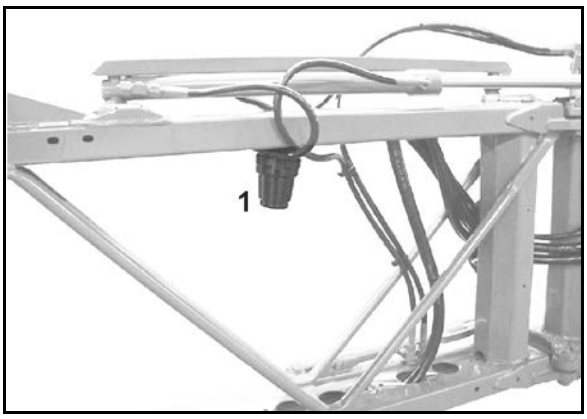

Overview of the filter inserts

- Filter insert with 50 mesh/inch (blue)
- Filter insert with 80 mesh/inch (grey)
- Filter insert with 100 mesh/inch (red)

6.8 Nozzles

(1) Nozzle body with bayonet connection

- o Spring element version with shutter
- o Spring element version, bolted

(2) Diaphragm. If the pressure in the spray line falls below approx. 0.5 bar, the spring element (3) presses the diaphragm onto the diaphragm seat (4) in the nozzle body. This ensures that when the sprayer boom is switched off, the nozzles are deactivated without subsequent dripping.

(3) Spring element.

(4) Shutter; holds the entire diaphragm valve in the nozzle body

(5) Nozzle filter; fitted as standard on machines with 50 mesh/inch, is inserted from below into the nozzle body.

(6) Rubber seal

(7) Nozzle with bayonet cap

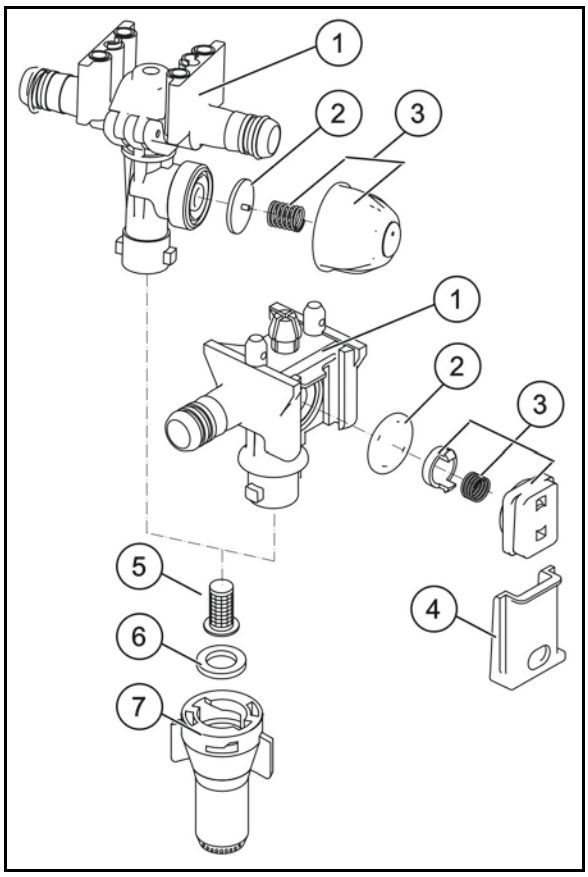

6.8.1 Multiple nozzles

It is advantageous to use multiple nozzle heads when using different nozzle types.

Turning the multiple nozzle head counterclockwise brings a different nozzle into play.

The multiple nozzle head is switched off in the intermediate positions. This provides the possibility of reducing the working width of the boom.

Flush the spray lines before twisting the multiple nozzle head to another nozzle type.

Triple nozzles (optional)

The vertically positioned nozzle is supplied.

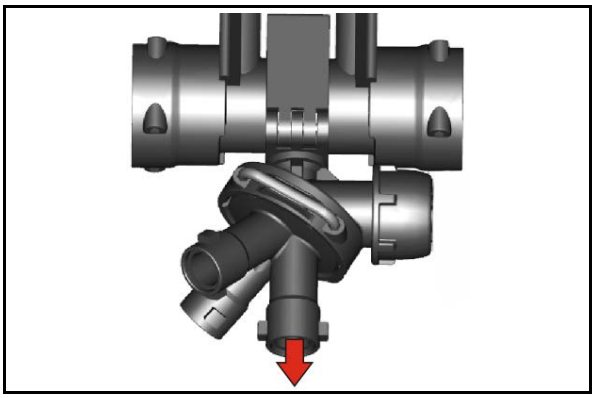

Quadruple nozzles (optional)

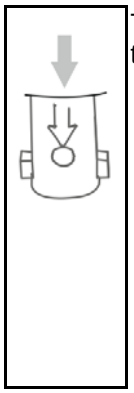

The arrow indicates the vertical nozzle that is being supplied.

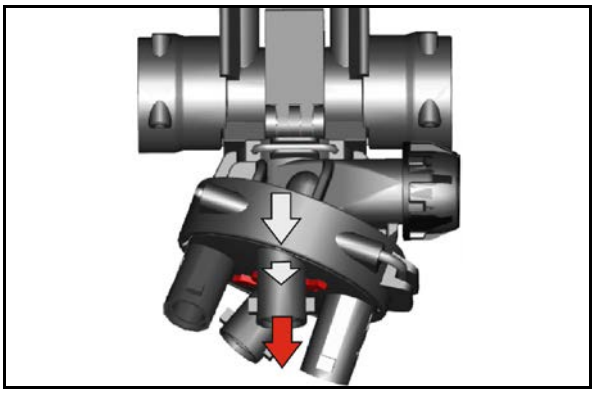

The quadruple nozzle body can be equipped with a 25-cm nozzle holder. This results in a nozzle spacing of 25 cm.

The arrow indicates the label 25 cm when the nozzle spacing is set at 25 cm.

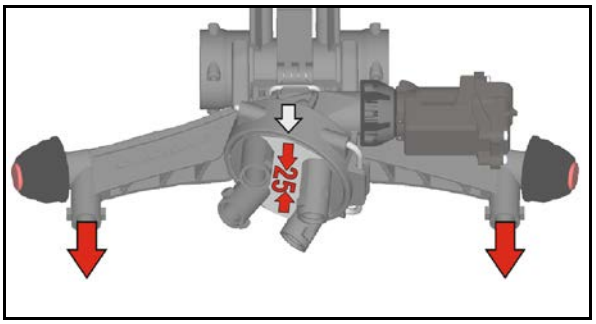

Install the 25 cm nozzle holder.

If the 25 cm nozzle holder is not used, close the supply with plugs.

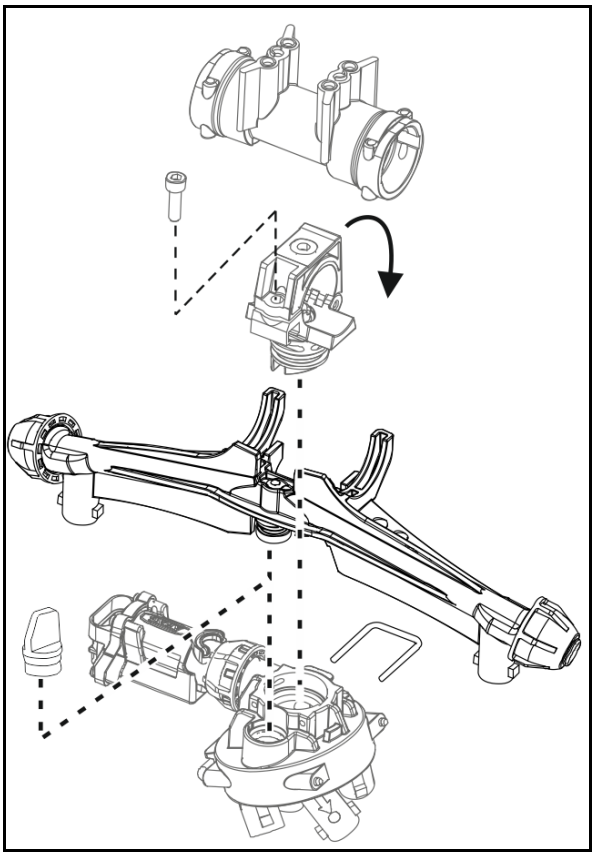

6.8.2 Edge nozzles

Boundary nozzles, electric or manual

With boundary nozzle switching, the last nozzle can be switched off and a border nozzle, 25 cm further out (right at the edge of the field), can be electrically switched on.

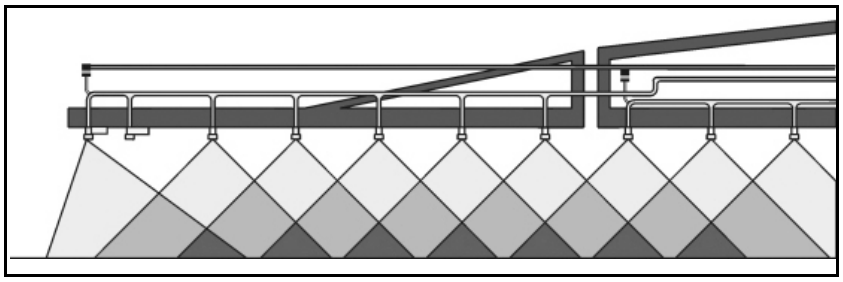

Electric end nozzle switching (optional)

Using end nozzle switching, up to three of the outer nozzles at the edge of the field close to a water source can be electrically switched off from the tractor).

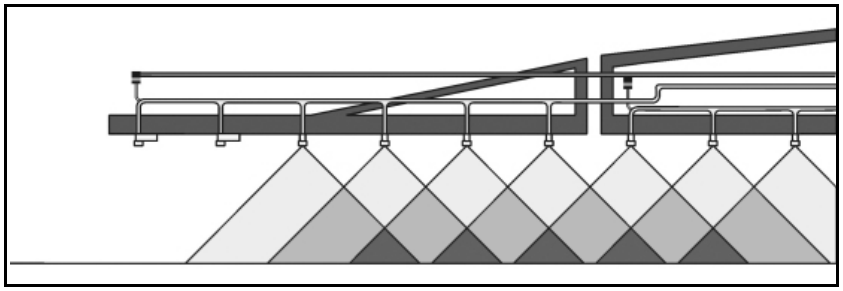

Electric additional nozzle switching (optional)

With the additional nozzle switching, another exterior nozzle is cut in, increasing the working width by one metre.

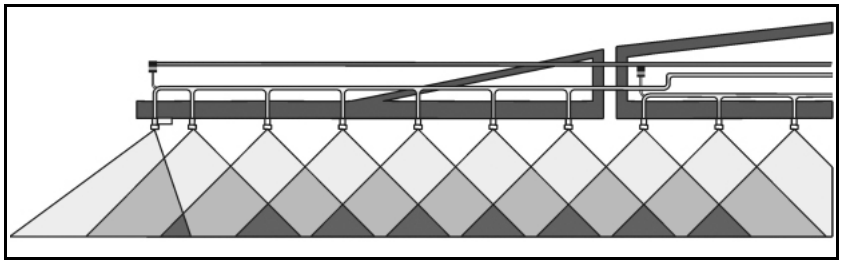

6.9 Automatic single nozzle control (optional)

50 cm part width sections can be controlled separately by the electric single nozzle control. In combination with the automatic part width section control "Section Control", overlapping can be reduced to a minimum area.

6.9.1 Single nozzle control AmaSwitch

Each nozzle can be switched on and off separately via Section Control.

(1) Nozzle body

(2) Union nut with diaphragm seal

(3) Motor valve

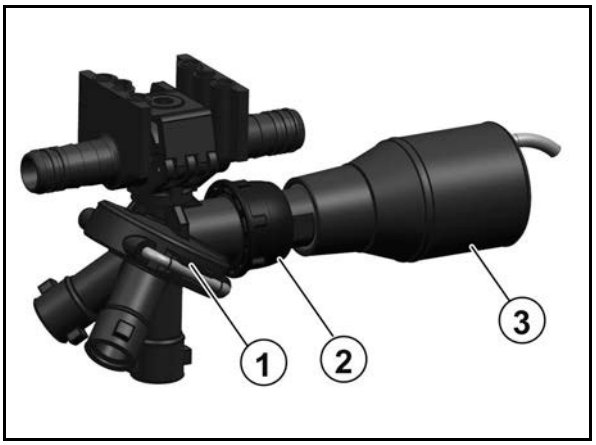

6.10 Special optional equipment for liquid fertiliser

There are currently two main types of liquid fertiliser available:

- Ammonium nitrate / urea solution (AUS) with 28 kg N per 100 kg AUS.
- An NP solution 10-34-0 with 10 kg N and 34 kg P_2O_5 per 100 kg NP solution.

If the liquid fertiliser is sprayed using flat-fan nozzles, multiply the corresponding values from the spray table for the spray rate (l/ha) by 0.88 for AUS and by 0.85 for NP solutions, as the spray rates listed (in l/ha) only apply for water.

As a rule:

Use coarse-dropped application for liquid fertiliser to avoid chemical burns to the plants. Overly large drops roll off the leaf and drops which are too small cause a magnifying glass effect, which burns the leaves. Too much fertiliser may cause burns to appear on the leaves due to the salt concentration in the fertiliser.

As a rule, do not spray more liquid fertiliser than, for example, 40 kg N (see also "Conversion table for spraying liquid fertiliser"). Always discontinue nozzle-based AUS fertilisation at development stage EC-39, because chemical burns to on ears have a particularly bad effect.

6.10.1 Three-ray nozzles

The use of three-ray nozzles for applying liquid fertiliser is beneficial if the liquid fertiliser needs to be taken up more by the roots of the plant than through the leaves.

Thanks to its three openings, the dosing aperture, which is integrated into the nozzle, ensures a coarse-dropped, almost depressurised distribution of the liquid fertiliser. This prevents an undesirable spray mist and the formation of smaller drops. The coarse drops produced by the three-ray nozzle hit the plants with little force and roll off their surface. **Although this avoids damage from burns to the greatest extent possible, avoid the use of three-ray nozzles for late top dressing and use drag hoses.**

For all three-ray nozzles listed in the following, only use the black bayonet nut.

Different three-ray nozzles and their operational areas (at 8 km/h)

- three-ray, yellow 50 - 80 l AUS/ha
- three-ray, red 80 - 126 l AUS/ha
- three-ray, blue 115 - 180 l AUS/ha
- three-ray, white 155 - 267 l AUS/ha

6.10.2 7 hole nozzles / FD- nozzles

The same conditions apply for using 7 hole nozzles / FD nozzles as for the three-ray nozzles. In contrast to the three-ray nozzle, in the case of the 7 hole nozzle / FD nozzles, the outlets are not oriented downwards, but instead point to the side. This allows very large drops to be produced on the plants using only slight impact forces.

The following 7-hole nozzles are available

- SJ7-02-CE 74 – 120l AHL (at 8 km/h)
- SJ7-03-CE 110 – 180l AHL
- SJ7-04-CE 148 – 240l AHL
- SJ7-05-CE 184 – 300l AHL
- SJ7-06-CE 222 – 411l AHL
- SJ7-08-CE 295 – 480l AHL

The following FD nozzles are available:

- FD 04 150 - 240 l AHL/ha (at 8 km/h)
- FD 05 190 - 300 l AHL/ha
- FD 06 230 - 360 l AHL/ha
- FD 08 300 - 480 l AHL/ha
- FD 10 370 - 600 l AHL/ha*

6.10.3 Drag hose unit for liquid fertiliser (optional)

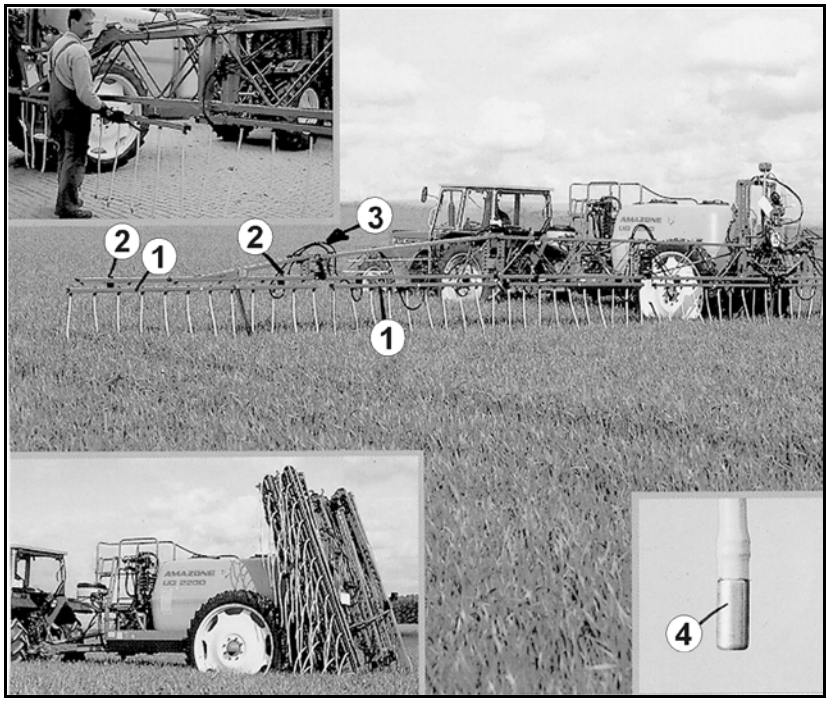

(1) Numbered, separate drag hose part width sections with 25 cm nozzle distance and hose distance. No. 1 on the left-hand side is fitted on the outside (looking in the direction of travel), no. 2 next to it and so on.

(2) Thumb nuts for securing the drag hose unit.

(3) Turned plug connection for connecting the hoses.

(4) Metal weights - stabilise the position of the hoses during operation.

The dosing discs determine the spray rate [l/ha].

The following dosing discs are available

(at 8 km/h)

- 4916-26 dia. 0.65 50 - 104 l AUS/ha
- 4916-32 dia. 0.8 80 - 162 l AUS/ha
- 4916-39 dia. 1.0 115 - 226 l AUS/ha (standard)
- 4916-45 dia. 1.2 150 - 308 l AUS/ha
- 4916-55 dia. 1.4 225 - 450 l AUS/ha

Refer to the section "Spray table for the drag hose unit", Seite 199.

7 Commissioning

This section contains information

- on commissioning your machine.
- on checking if it is possible to connect the machine to your tractor.

- Before operating the machine for the first time the operator must have read and understood the operating manual.
- Comply with the section "Safety information for the user", starting on page 28 when
  - coupling and uncoupling the machine
  - transporting the machine
  - using the machine
- Only couple and transport the machine to a tractor which is suitable for the task.
- The tractor and machine must meet the national road traffic regulations.
- The operator and the user shall be responsible for compliance with the statutory road traffic regulations.

WARNING

Risk of crushing, shearing, cutting, and being drawn in or trapped in the vicinity of hydraulically or electrically actuated components.

Do not block the operator controls on the tractor which are used for hydraulic and electrical movements of components, e.g. folding, swivelling and pushing movements. The movement must stop automatically when you release the appropriate control. This does not apply to equipment movements that:

- are continuous or
- are automatically locked or
- require a floating position or pressed position to function

7.1 Checking the suitability of the tractor

WARNING

Risk of breaking during operation, insufficient stability and insufficient tractor steering and braking power from improper use of the tractor.

- Check the suitability of your tractor, before connecting the machine to the tractor.

  You may only connect the machine to tractors suitable for the purpose.
- Carry out a brake test to check whether the tractor achieves the required braking rate with the machine connected.

Requirements for the suitability of a tractor are, in particular:

- Permissible total weight
- Permissible approved axle loads
- Permissible drawbar load at the tractor coupling point
- Load capacity of the tyres fitted
- The approved trailer load must be sufficient

  You can find this data on the rating plate or in the vehicle documentation and in the tractor operating manual.

The front axle of the tractor must always be subjected to at least 20% of the dead-weight of the tractor.

The tractor must achieve the brake rate specified by the tractor manufacturer, even with the machine connected.

7.1.1 Calculating the actual values for the total tractor weight, tractor axle loads and tyre load capacities, as well as the minimum ballast

The permissible total tractor weight, specified in the vehicle documentation, must be greater than the sum of the

- Tractor empty weight,
- Ballast weight and
- Total weight of the connected machine or drawbar load of the connected machine

This information is only valid for the Federal Republic of Germany:

If, having tried all possible alternatives, it is not possible to comply with the axle loads and / or the permissible total weight, then a survey by an officially-recognised motor vehicle traffic expert can, with the approval of the tractor manufacturer, be used as a basis for the authority responsible to issue an exceptional approval according to § 70 of the German Regulations Authorising the Use of Vehicles for Road Traffic and the required approval according to § 29, paragraph 3 of the German Road Traffic Regulations.

7.1.1.1 Data required for the calculation

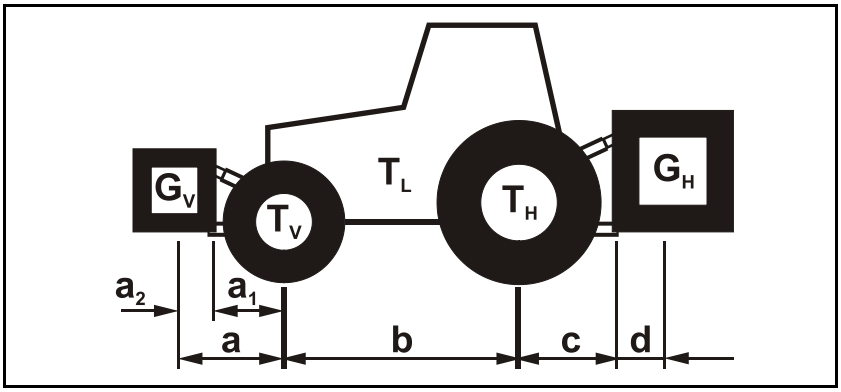

T_L	[kg]	Tractor empty weight	See tractor operating manual or vehicle documentation
T_V	[kg]	Front axle load of the empty tractor	
T_H	[kg]	Rear axle load of the empty tractor	
G_H	[kg]	Total weight of rear-mounted machine or rear ballast	See technical data for machine or rear ballast
G_V	[kg]	Total weight of front-mounted machine or front ballast	See technical data for front-mounted machine or front ballast
a	[m]	Distance between the centre of gravity of the front machine mounting or the front ballast and the centre of the front axle (total $a_1 + a_2$)	See technical data of tractor and front machine mounting or front ballast or measurement
a_1	[m]	Distance from the centre of the front axle to the centre of the lower link connection	See tractor operating manual or measurement
a_2	[m]	Distance between the centre of the lower link connection point and the centre of gravity of the front machine mount or front ballast (centre of gravity distance)	See technical data of front machine mounting or front ballast or measurement
b	[m]	Tractor wheel base	See tractor operating manual or vehicle documents or measurement
c	[m]	Distance between the centre of the rear axle and the centre of the lower link connection	See tractor operating manual or vehicle documents or measurement
d	[m]	Distance between the centre of the lower link connection point and the centre of gravity of the rear-mounted machine or rear ballast (centre of gravity distance)	See technical data of machine

7.1.1.2 Calculation of the required minimum ballasting at the front $G_{V\ min}$ of the tractor to ensure steering capability

$$G_{V\ \min} = \frac{G_H \bullet (c+d) - T_V \bullet b + 0{,}2 \bullet T_L \bullet b}{a+b}$$

Enter the numeric value for the calculated minimum ballast, $G_{V\ min}$, required on the front of the tractor, in the table (page 109).

7.1.1.3 Calculation of the actual front axle load of the tractor $T_{V\ tat}$

$$T_{V\ tat} = \frac{G_V \bullet (a+b) + T_V \bullet b - G_H \bullet (c+d)}{b}$$

Enter the numeric value for the calculated actual front axle load and the approved tractor front axle load specified in the tractor operating manual, in the table (page 109).

7.1.1.4 Calculation of the actual total weight of the combined tractor and machine

$$G_{tat} = G_V + T_L + G_H$$

Enter the numeric value for the calculated actual total weight and the approved total tractor weight specified in the tractor operating manual in the table (page 109).

7.1.1.5 Calculation of the actual rear axle load of the tractor $T_{H\ tat}$

$$T_{H\ tat} = G_{tat} - T_{V\ tat}$$

Enter the numeric value for the calculated actual rear axle load and the approved tractor rear axle load specified in the tractor operating manual in the table (page 109).

7.1.1.6 Tractor tyre load-bearing capacity

Enter double the value (two tyres) of the permissible load capacity (see, for example, the tyre manufacturer's documentation) in the table (page 109).

7.1.1.7 Table

	Actual value according to calculation		Permissible value according to tractor operating manual		Double the permissible load capacity (two tyres)
Minimum ballast front / rear	/ kg		--		--
Total weight	kg	≤	kg		--
Front axle load	kg	≤	kg	≤	kg
Rear axle load	kg	≤	kg	≤	kg

- You can find the permissible values for the total tractor weight, axle loads and load capacities in the tractor registration papers.
- The actually calculated values must be less than or equal to (≤) the permissible values.

WARNING

Risk of crushing, cutting, being trapped or drawn in, or impact through insufficient stability of the tractor and insufficient tractor steering capability and braking power.

It is forbidden to couple the machine to the tractor used as the basis for calculation, if

- one of the actual, calculated values is greater than the permissible value.
- there is no front ballast (if required) attached to the tractor for the minimum front ballast ($G_{V\ min}$).

- Ballast your tractor with weights at the front or rear if the tractor axle load is exceeded on only one axle.
- Special cases:
  - If you do not achieve the minimum ballast at the front ($G_{V\ min}$) from the weight of the front-mounted machine (G_V), you must use ballast weights in addition to the front-mounted machine.
  - If you do not achieve the minimum ballast at the rear ($G_{H\ min}$) from the weight of the rear-mounted machine (G_H), you must use ballast weights in addition to the rear-mounted machine.

7.2 Installing the PTO shaft

CAUTION

- **Use only the PTO shaft prescribed by AMAZONE.**
- **Only install the PTO shaft before the field sprayer is fitted and with the tanks empty.**

1. Clean and grease the pump input shaft (1).
2. Press in the PTO shaft spring pin (1).
3. Insert the PTO shaft until the spring pin engages, securing the PTO shaft axially.
4. Secure the PTO shaft guard against simultaneous rotation by attaching the chain (2) to the machine (2).

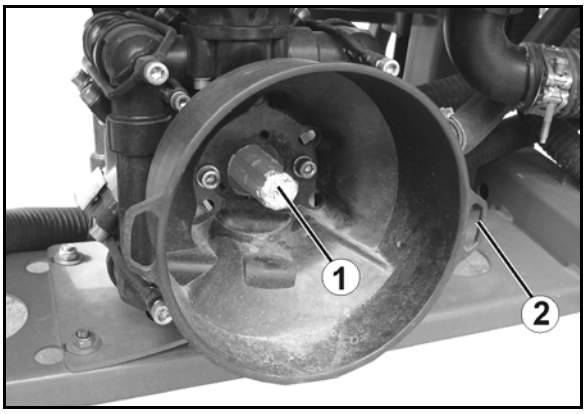

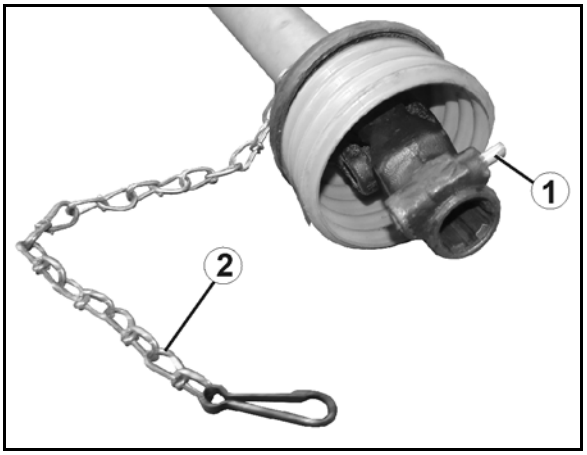

7.3 Adjusting the length of the PTO shaft to the tractor

WARNING

Danger from

- **damaged and/or destroyed, flying parts for the operator / third party if the PTO shaft is compressed or pulls apart while the machine coupled to the tractor is being raised/lowered, because the length of the PTO shaft has not been adjusted properly.**
- **being caught and drawn in if the PTO shaft is installed incorrectly or if unauthorised design changes are made.**

Have the length of the PTO shaft checked in all operating positions by a specialist workshop and, if necessary, adjusted before coupling the PTO shaft to your tractor for the first time.

Always observe the operating manual supplied with the PTO shaft when adjusting the PTO shaft.

This adjustment of the PTO shaft applies only for the current tractor type. You may need to readjust the PTO shaft if you couple the machine to another tractor.

WARNING

Risk of being caught and drawn in if the PTO shaft is installed incorrectly or if unauthorised design changes are made.

Only a specialist workshop may make design changes to the PTO shaft. When doing so, read and follow the operating manual from the manufacturer.

Adjusting the length of the PTO shaft is permitted with consideration of the minimum profile overlap.

Design changes to the PTO shaft that are not described in the operating manual from the PTO shaft manufacturer are not permitted.

WARNING

Risk of crushing between the rear of the tractor and the machine when raising and lowering the machine to determine the shortest and longest operating position of the PTO shaft.

Only actuate the operator controls for the tractor's three-point linkage

- from the intended workstation.
- if you are outside of the danger area between the tractor and the machine.

WARNING

Risk of crushing from unintentional:

- **rolling of the tractor and the connected machine.**
- **lowering of the raised machine.**

Secure the tractor and machine from unintentionally starting or rolling and secure the raised machine against unintentional lowering before entering the danger zone between the tractor and raised machine in order to adjust the PTO shaft.

The PTO shaft is at its shortest when it is horizontal. The PTO shaft is at its longest when the machine is fully lifted.

1. Couple the tractor to the machine (do not connect the PTO shaft).
2. Apply the tractor's parking brake.
3. Determine the clearance height of the machine with the shortest and longest operating position for the PTO shaft.
   3.1 To do so, raise and lower the machine via the tractor's three-point hydraulic system.
   While doing so, actuate the manual controls for the tractor's three-point hydraulic system on the rear of the tractor, from the provided workstation.
4. Secure the machine, lifted in the measured clearance height, against unintentional lowering (for example, by supporting it or hooking it to a crane).
5. Secure the tractor from unintentional starting before entering the danger area between the tractor and machine.
6. When measuring the length and shortening the PTO shaft, read and follow the operating manual from the PTO shaft manufacturer.
7. Put the shortened halves of the PTO shaft back together.
8. Grease the universal joint shaft of the tractor and the pump input shaft before connecting the PTO shaft.
   The tractor symbol on the protective tube of the PTO shaft identifies the tractor-side connection of the PTO shaft.

7.4 Securing the tractor / machine against unintentional start-up and rolling

WARNING

Risk of crushing, shearing, cutting, being caught and/or drawn in, or impact when making interventions in the machine, through

- **unintentional falling of the unsecured machine raised using the tractor's three-point linkage.**
- **unintentional falling of raised, unsecured machine parts.**
- **unintentional start-up and rolling of the tractor-machine combination.**
- Secure the tractor and the machine against unintentional start-up and rolling before making any intervention in the machine.
- It is forbidden to make any intervention in the machine, such as installation, adjustment, troubleshooting, cleaning, maintenance and repairs
  - when the machine is running
  - for as long as the tractor engine is running with a connected PTO shaft / hydraulic system.
  - when the ignition key is inserted in the tractor and the tractor engine with the connected PTO shaft / hydraulic system could be started unintentionally.
  - when the tractor and machine are not secured against unintentional rolling using their parking brakes and/or wheel chocks.
  - when moving parts are not locked against unintentional movement.

  When carrying out such work, there is a high risk of contact with unsecured components.

1. Lower the raised, unsecured machine / raised, unsecured parts of the machine.

→ This is how to prevent unintentional falling:

2. Shut down the tractor engine.
3. Remove the ignition key.
4. Apply the tractor's parking brake.
5. Secure the machine against unintentional rolling (only attached machine)
   - On flat ground using the parking brake (if present) or wheel chocks.
   - On uneven ground or slopes using the parking brake and wheel chocks.

7.5 Adjusting the hydraulic system with the system setting screw

Profi-folding: The hydraulic block is located at the front right on the implement.

- Be sure to match the hydraulic systems of the tractor and the implement.
- The implement hydraulic system is adjusted using the system setting screw on the hydraulic block of the implement.
- Elevated hydraulic oil temperatures are the result of incorrect adjustment of the system setting screw, caused by persistent strain on the pressure relief valve of the tractor hydraulic system.
- Adjustments may only be made in a pressureless state!
- If there are hydraulic malfunctions between the tractor and the implement during start-up, please contact your service partner.

(1) Switching tap can be adjusted in position A and B

(2) LS connection for the load sensing control line

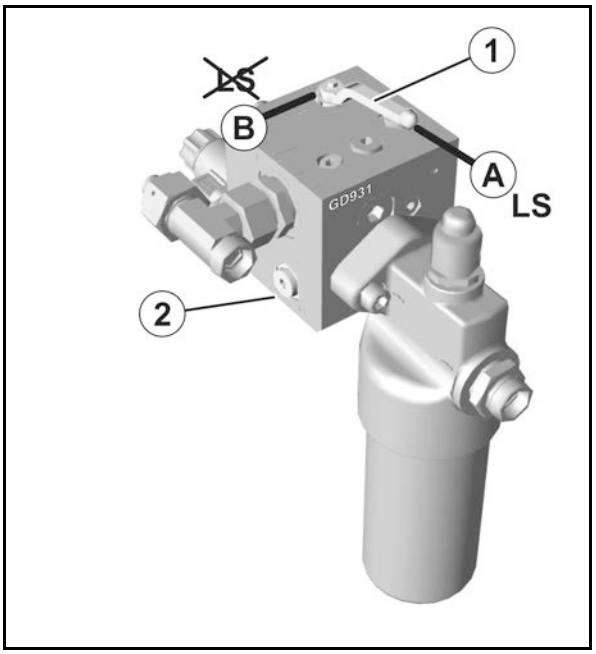

Implement-side connections in compliance with ISO15657:

(1) P – feed line, pressure line, plug standard width 20

(2) LS – control line, plug standard width 10

(3) T - return line, socket standard width 20

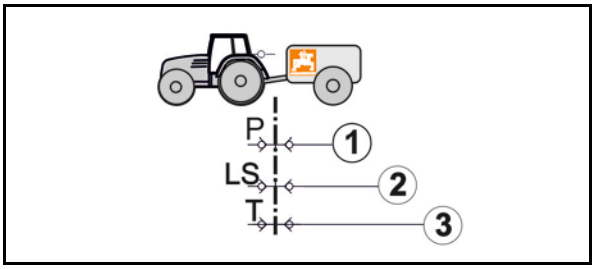

(1) Open-Center hydraulic system with constant flow pump (gear pump) or setting pump.

→ Put the system setting screw in position A.

Setting pump: Set the maximum required oil quantity on the tractor control unit. If the oil quantity is insufficient, correct functioning of the implement cannot be ensured.

(2) Load-Sensing hydraulic system (pressure- and flow-regulated setting pump) with direct load sensing pump connection and LS setting pump.

→ Put the system setting screw in position B.

(3) Load-Sensing hydraulic system with constant flow pump (gear pump).

→ Put the system setting screw in position B.

(4) Closed-Center hydraulic system with pressure-regulated setting pump.

→ Put the system setting screw in position B.

Risk of overheating of the hydraulic system: the Closed-Center hydraulic system is less suitable for the operation of hydraulic motors.

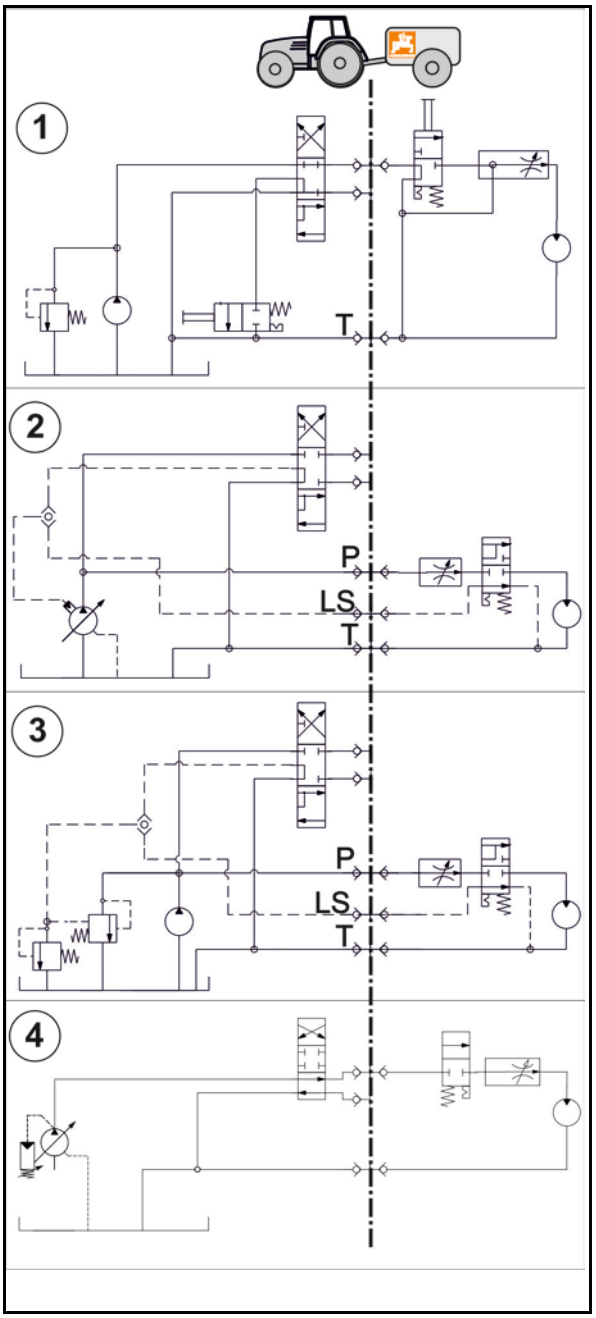

8 Coupling and uncoupling the machine

WARNING

Risk of crushing between the rear of the tractor and the machine when coupling and uncoupling the machine.

Only actuate the operator controls for the tractor's three-point linkage

- from the intended workstation.
- if you are outside of the danger area between the tractor and the machine.

8.1 Coupling the machine

WARNING

Risk of breaking during operation, insufficient stability and insufficient tractor steering and braking power from improper use of the tractor.

You may only connect the machine to tractors suitable for this purpose. Refer to the section "Checking the suitability of the tractor", page 106.

WARNING

Risk of crushing when coupling the machine and standing between the tractor and the machine.

Instruct people to leave the danger area between the tractor and the machine before you approach the machine.

Any helpers may only act as guides standing next to the tractor and the machine, and may only move between the vehicles when both are at a standstill.

WARNING

Risk of crushing, being caught or pulled in, or impact when the machine is unexpectedly released from the tractor.

- Use the intended equipment to connect the tractor and the machine in the proper way.
- When coupling the machine to the tractor's three-point hydraulic system, ensure that the attachment categories of the tractor and the machine are the same.

  Be absolutely certain to upgrade the machine's category II lower link pin to category III using reducing sleeves if your tractor has a category III three-point linkage.
- Only use the upper and lower link pins provided to couple up the machine (original pins).
- Check the upper and lower link pins for visible defects whenever the machine is coupled. Replace the upper and lower link pins in the event of clearly visible wear.
- Secure the upper link pin and lower link pin in the attachment points of the three-point attachment frame against unintentional detachment using a linchpin.
- Perform a visual inspection to ensure that the upper and lower link hooks are correctly locked before reversing the tractor.

WARNING

Risk of energy supply failure between the tractor and the machine due to damaged power supply lines.

During coupling, check the course of the power supply lines. The power supply lines

- must give slightly to all movement of the connected machine without tensioning, kinking or rubbing.
- must not chafe against other parts.

WARNING

Risk of injury or even death

Before working on the implement, secure the tractor and the implement against unintentional starting and rolling away, see page 113.

CAUTION

Risk of collision of the parking device with the tractor wheel.

Before starting off, check that there is enough space between the tractor and the implement in all mounting positions.

The parking wheel must always be able to turn freely.

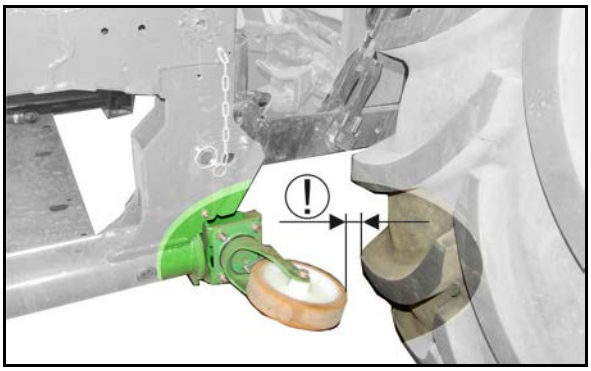

1. Set the tractor lower links to the same height.
2. Fasten and secure the ball sleeves in the coupling points of the 3-point hitch.
3. Drive the tractor towards the implement so that enough space remains between the tractor and implement to be able to couple the supply lines.
4. Couple the supply lines.
5. Couple the universal joint shaft.
6. Drive the tractor towards the implement.
7. Couple the lower links from the tractor seat.
8. Couple the top link from the tractor seat.
9. Check that the top and lower link hooks are correctly locked.
10. Raise the implement to transport position.
11. Adjust the length of the top link so that the boom carrier is perpendicular to the mounted sprayer.
12. Move the parking supports into transport position.

8.1.1 Coupling implements with quick coupling system

CAUTION

Damage to the implement during coupling.

When using the quick coupling system, the top link for normal three-point mounting may not be installed!

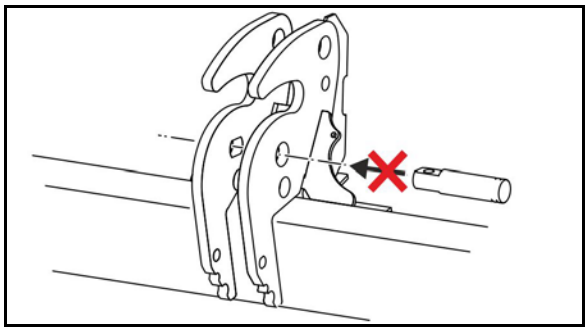

CAUTION

Displacement of the implement during coupling.

Determine the optimal top link length and the tractor-side coupling point of the top link before coupling the implement on the tractor.

(1) If the coupling system locks the top link, the lower link pin must be located precisely above the coupling point of the tractor lower link to be able to couple the lower link.

(2) The raised implement in working position must be standing vertically.

1. Set the tractor lower links to the same height.
2. Fasten and secure the ball sleeves in the coupling points of the 3-point hitch.
3. Drive the tractor towards the implement so that the unlocked system can catch the top link.
4. Couple the top link on the implement side.
5. Couple the supply lines.
6. Couple the universal joint shaft.
7. Check that the hand lever on the coupling system is raised.

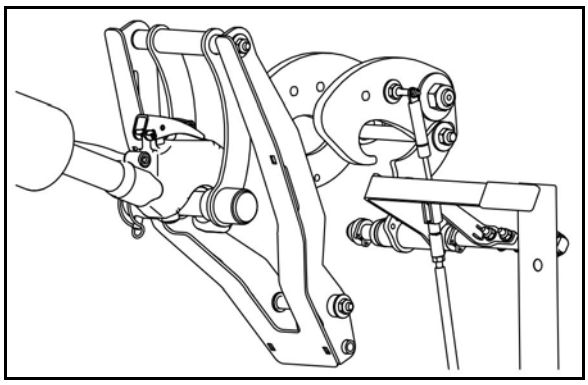

8. Drive the tractor towards the implement until the coupling system locks the top link with the latch.

→ The lower link pins are now exactly above the coupling point of the tractor lower link.

9. Couple the lower links from the tractor seat.

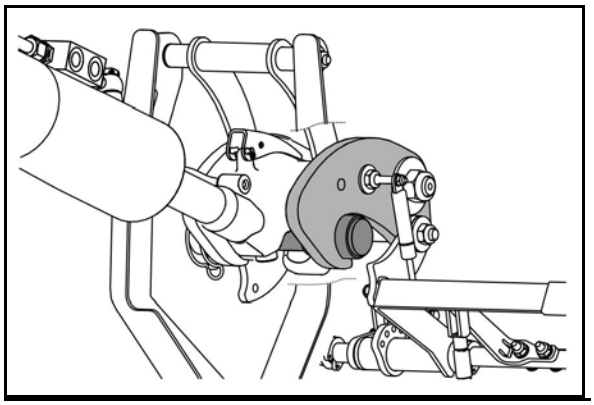

10. Check that the top and lower link hooks are correctly locked.

11. Raise the implement to transport position.

12. Move the parking supports into transport position.

→ The top link locking mechanism secures the top link to the rear.

13. Check that the coupling system properly locks the top link.

14. Using the spirit level, check the vertical position of the implement in working position.

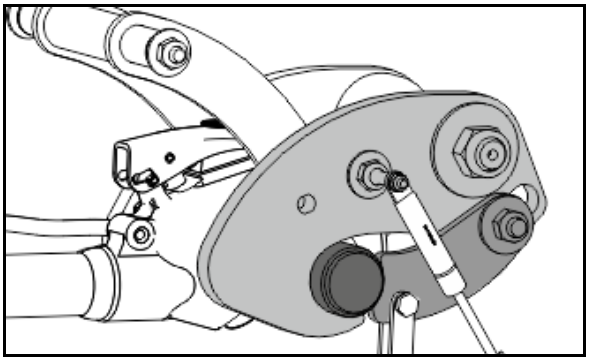

8.2 Uncoupling the machine

WARNING

Danger due to tipping over of the uncoupled implement.

- Move the parking supports into support position before you uncouple the implement.
- Always set down the uncoupled implement with an empty hopper on a level surface with solid ground.

WARNING

Risk of injury or even death

- Instruct persons away from the danger area between the tractor and the implement. Guides and helpers may only stand beside the tractor and the implement.
- Before working on the implement, secure the tractor and the implement against unintentional starting and rolling away, see page 113.

1. Move the parking supports into parking position.
2. Park the implement on a level surface with solid ground.
3. Release the top link.
4. Uncouple the top link from the implement from the tractor seat.
5. Release the lower links.
6. Uncouple the lower links from the implement from the tractor seat.
7. Drive the tractor forward so that the supply lines can be uncoupled.
8. Uncouple the supply lines.
9. Uncouple the universal joint shaft.

8.2.1 Uncoupling implements with quick coupling system

The parking supports must be in parking position to be able to uncouple the implement from the tractor.

1. Move the parking supports into parking position.

→ The top link locking mechanism releases the top link to the rear.

2. Lower the hand lever on the coupling system.

→ The locking mechanism for the coupling system is unlocked.

3. Park the implement on a level surface with solid ground.

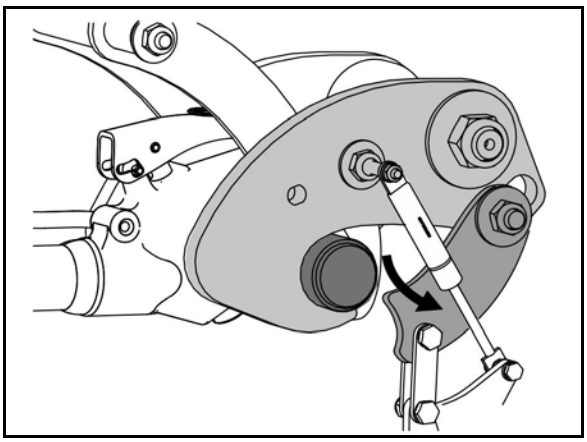

4. If the coupling system does not automatically release the top link, drive back a bit with the tractor.
5. Release the lower links.
6. Uncouple the lower links from the implement from the tractor seat.

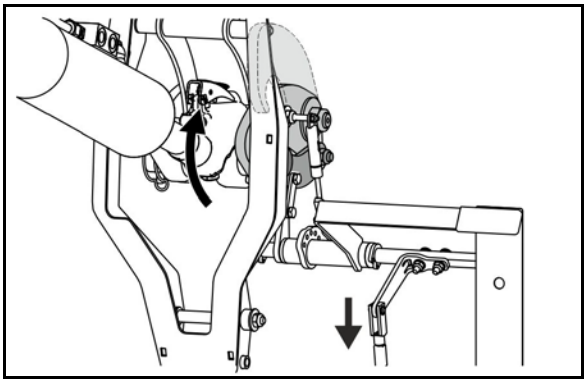

7. Drive the tractor forward

- as far as possible with the coupled top link (maximum 450 mm).
- so that the supply lines can be uncoupled.

8. Uncouple the universal joint shaft.
9. Uncouple the supply line.
10. Uncouple the top link.

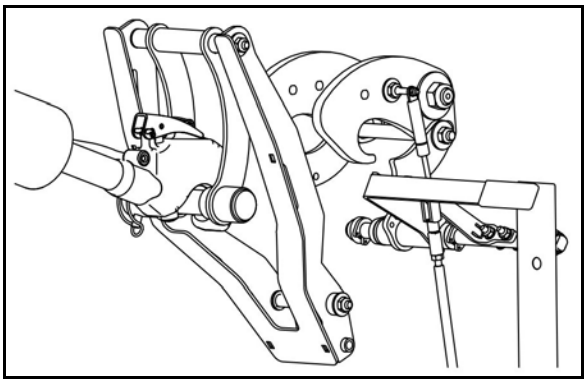

11. Raise the hand lever again.

9 Transportation

WARNING

Risk of crushing, cutting, being caught and/or drawn in, or impact through unintentional releasing of the coupled machine.

Carry out a visual check that the upper and lower link pins are firmly fixed with the linchpin against unintentional release.

WARNING

Risk of crushing, shearing, cutting, being caught and/or drawn in, or impact when making interventions in the machine, through unintentional machine movements.

- On foldable machines, check that the transport locks are correctly locked.
- Secure the machine against unintentional movements before starting transportation.

WARNING

Risk of crushing, cutting, being caught and/or drawn in, or impact from tipping and insufficient stability.

- Drive in such a way that you always have full control over the tractor with the attached machine.

  In so doing, take your personal abilities into account, as well as the road, traffic, visibility and weather conditions, the driving characteristics of the tractor and the connected machine.
- Before transportation, fasten the side locking device of the tractor lower link, so that the connected or coupled machine cannot swing back and forth.

WARNING

Risk of breaking during operation, insufficient stability and insufficient tractor steering and braking power from improper use of the tractor.

These risks pose serious injuries or death.

Comply with the maximum load of the connected machine and the permissible axle and drawbar loads of the tractor. If necessary, drive only with a partially filled tank.

WARNING

Risk of falling when riding on the machine, contrary to instructions.

It is forbidden to ride on the machine and/or climb the machine while it is running.

Instruct people to leave the loading site before approaching the machine.

The tractor headlights are covered when using the front tank!

If roof headlights are used instead, the transport speed may be maximum 30 km/h.

CAUTION

- Move the sprayer boom to the transport position and secure mechanically.

→ If a working width reduction of the outer elements is mounted, unfold it for transporting purposes.

- Use the transport locking mechanism to secure the swivelled-up induction bowl in transport position against unintentional swivelling down.
- Use the transport locking mechanism to lock the raised ladder against unintentional folding down.
- If a boom extension is installed, move it into the transport position
- Switch the work lights off during transport to avoid blinding other motorists.

10 Using the machine

When using the machine, observe the information in the following sections:

- "Warning symbols and other labels on the machine" starting on page 18 and
- "Safety information for the user", starting on page 28 ff.

Observing this information is important for your safety.

Observe the separate operating manual for the control terminal and the implement control software.

WARNING

DistanceControl, ContourControl

Risk of injury due to accidental movement of the sprayer boom in automatic mode when entering the radiation area of the ultrasound sensor.

Lock the sprayer boom → 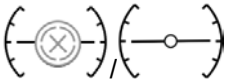

- Before leaving the tractor.
- If unauthorised persons are standing in the area of the sprayer boom.

WARNING

Risk of breaking during operation, insufficient stability and insufficient tractor steering and braking power from improper use of the tractor.

Observe information on the maximum load of the coupled machine and the permissible axle and drawbar loads of the tractor. If necessary, drive only with a partially filled tank.

WARNING

Risk of crushing, cutting, being caught and/or drawn in, or impact through insufficient stability and tipping of the tractor and/or the connected machine.

Drive in such a way that you always have full control over the tractor and the attached machine.

In so doing, take your own abilities into account, as well as the road, traffic, visibility and weather conditions, the driving characteristics of the tractor and the coupled machine.

WARNING

Risk of crushing, cutting, being caught and/or drawn in, or impact through unintentional releasing of the coupled machine.

Before machine use, carry out a visual check that the upper and lower link pins are firmly fixed with the linchpin against unintentional release.

WARNING

Risk of crushing, shearing, cutting, being caught and/or drawn in, trapping or impact through

- **unintentional falling of raised, unsecured machine parts.**
- **unintentional start-up and rolling of the tractor-machine combination.**

Secure the tractor and the machine against unintentional start-up and rolling before eliminating faults on the machine. See page 113.

Wait for the machine to stop before entering the machine danger area.

WARNING

Danger for the operator or third parties from damaged components being ejected due to impermissibly high drive speeds of the tractor universal joint shaft.

Observe the permissible machine drive speed before switching on the tractor universal joint shaft.

WARNING

Risk of being caught and drawn in and danger from foreign objects being caught and thrown out in the danger area of the driven PTO shaft.

- Whenever the machine is used, first check to ensure that the safety devices and guards of the PTO shaft are fully intact and functional.

  Have damaged safety devices and guards of the PTO shaft replaced immediately by a specialist workshop.
- Check that the PTO shaft guard is secured against rotation by the supporting chain.
- Maintain a sufficient safety clearance between you and the driven PTO shaft.
- Direct people out of the danger area of the driven PTO shaft.
- Shut down the tractor engine immediately in case of danger.

WARNING

Risk of accidental contact with crop protection agents / spray liquid.

- Wear personal protective equipment
  - when preparing the spray liquid.
  - when cleaning / replacing the spraying nozzles during spraying operation.
  - for all cleaning work carried out on the field sprayer after spraying operation.
- When wearing the required protective clothing, always observe the manufacturer's instructions, the product information, the user manual, the safety datasheet or the operating manual for the crop protection agent to be used. For example, use:
  - Chemical-resistant gloves
  - Chemical-resistant overalls
  - Water-resistant footwear
  - A face mask
  - Breathing apparatus
  - Safety glasses
  - Skin protection agents, etc.

WARNING

Risk to health from accidental contact with crop protection agents or spray liquid.

- Put on protective gloves before
  - using crop protection agent,
  - carrying out work on a contaminated field sprayer or
  - cleaning the field sprayer.
- Wash the gloves with clear fresh water from the fresh water tank
  - immediately after contact with crop protection agent.
  - before removing the gloves.

10.1 Preparing for spraying operation

- The field sprayer must be operating properly in order to guarantee correct application of the crop protection agent. Have the field sprayer tested regularly on a test rig. Rectify any deficiencies immediately.
- Make sure of using the correct filter equipment.
- Clean the field sprayer thoroughly before spreading a different crop protection agent.
- Flush the nozzle line before:
  - each time changing a nozzle.
  - before rotating the multiple-nozzle head to another nozzle.

  See the section on "Cleaning", page 164
- Fill the flushing water tank and the clear water tank.

10.2 Preparing the spray liquid

WARNING

Risk of accidental contact with crop protection agent and/or spray liquid.

- Always induct the crop protection agent into the spray liquid tank using the induction bowl.
- Swivel the induction bowl into the filling position before pouring in crop protection agent.
- Observe the safety regulations on physical protective equipment and breathing apparatus for use when handling crop protection agent and preparing the spray liquid, in the instructions for use of the crop protection agent.
- Do not prepare the spray liquid in the vicinity of wells or surface water.
- Avoid leaks and contamination with crop protection agent and/or spray liquid through appropriate conduct and wearing appropriate physical protection equipment.
- To avert risks to third parties, do not leave the prepared spray liquid, unused crop protection agent or used crop protection agent canisters and the uncleaned field sprayer unattended.
- Protect contaminated crop protection agent canisters and the contaminated field sprayer from precipitation.
- During and after preparing the spray liquid, ensure sufficient cleanliness in order that risks may be kept as low as possible (e.g. thoroughly wash used gloves before removing them and dispose of the washing water and cleaning fluid in the proper manner).

- The prescribed water and agent spray rate can be found in the directions for use for the crop protection agent.
- Read the directions for use for the agents and observe the specified precautions.

WARNING

Danger for people and animals from accidental contact with spray liquid while filling of the spray liquid tank is underway.

- Wear personal protective equipment when handling crop protection agent / dumping spray liquid from the spray liquid tank. The type of personal protective equipment required depends on the manufacturer's instructions, the product information, the directions for use, the safety datasheet or the user manual for the crop protection agent in question.
- Never leave the field sprayer unattended during filling.
  - Never fill the spray liquid tank beyond the nominal volume.
  - When filling the spray liquid tank, never exceed the permissible load of the field sprayer. Pay attention to the respective specific weight of the liquid in question.
  - During filling, always watch the fill level indicator to avoid overfilling the spray liquid tank.
  - Pay particular attention while filling the spray liquid tank to sealed surfaces; no spray liquid may be allowed to get into the sewerage system.
- Check the field sprayer before each filling for damage, e.g. for leaking tanks and hoses, as well as for the correct positioning of all control elements.

During filling, pay attention to the permissible load capacity for your field sprayer. Always take into account, when filling your field sprayer, the differing specific weights [kg/l] for individual liquids.

Specific weights of different liquids

Liquid	Water	Urea	AUS	NP solution
Density [kg/l]	1	1.11	1.28	1.38

- As it is difficult to dispose of residues in an environmentally-friendly manner, carefully calculate the required filling quantity or re-fill quantity to avoid leaving any residue at the end of spraying operation.
  - To calculate the required re-fill quantity for topping up the spray liquid tank, use the "Filling table for remaining spray area". To do this, subtract the technical, undiluted residue in the sprayer boom from the calculated re-fill quantity.

    Refer to the section "Filling table for remaining areas"

Procedure

1. Determine the required water and agent spray rate by consulting the directions for use for the crop protection agent.
2. Calculate the filling quantity or re-fill quantity for the area to be treated.
3. Fill the machine and blend in the agent.
4. Agitate the spray liquid before commencing spraying operation, in accordance with the instructions of the spraying agent manufacturer.

Fill the machine preferably using a suction hose and blend in the agent while filling.

The induction area is thereby flushed with water constantly.

- During the filling process, start blending in the agent once the tank filling level has reached more than 20%.
- When using more than one agent:
  - Clean the canister immediately after each induction of an agent.
  - Flush the induction port after each induction of an agent.

- When filling, no foam must escape from the spray liquid tank.

  The addition of a froth-inhibiting agent also prevents the spray liquid tank from frothing over.

The agitators normally remain switched on from the initial filling to the end of the spraying operation. The instructions of the agent manufacturer, however, have priority.

- With the agitator running, feed the water-soluble plastic film bag directly into the spray liquid tank.
- Before spraying, fully dissolve the urea by circulating the liquid. When dissolving large quantities of urea, the temperature of the spray liquid falls more sharply; the urea consequently dissolves more slowly. The warmer the water, the faster and more completely the urea can dissolve.

- Carefully wash the empty agent canisters, render them unusable, collect and dispose of them in a proper manner. Do not reuse them for other purposes.
- If only spray liquid is available for washing the agent canisters, first use this to carry out preliminary cleaning. Then wash them meticulously when clear fresh water is available, e.g. before preparing the next load for the spray liquid tank or when diluting the residue from the last load.
- Carefully wash out the empty agent tank (e.g. using canister flushing) and add the flushing water to the spray liquid!

High degrees of water hardness above 15° dH (German degrees of hardness) can lead to lime deposits, which may impede the functioning of the implement and must be removed at regular intervals.

10.2.1 Calculating the filling and re-fill quantity

To calculate the required re-fill quantity for final filling of the spray liquid tank use the "Filling table for remaining spray area", Seite 134.9

Example 1:

The following are given:

Tank nominal volume	1,200 l
Residue in the tank	0 l
Water consumption	400 l/ha
Agent required per ha	
Agent A	1.5 kg
Agent B	1.0 l

Question:

How many litres of water, how many kg of Agent A and how many litres of Agent B must be used to treat a surface of 2.5 ha in area?

Answer:

Water:	400 l/ha	x	3 ha	=	1,200 l
Agent A	1.5 kg/ha	x	3 ha	=	4.5 kg
Agent B	1.0 l/ha	x	3 ha	=	3 l

Example 2:

The following are given:

Tank nominal volume	1,200 l
Residue in the tank	200 l
Water consumption	500 l/ha
Recommended concentration	0.15 %

Question 1:

How many litres or kg of agent are needed to fill the tank?

Question 2:

How large is the area to be treated in ha if a residue of 20 l remains in the tank after spraying?

Formula and answer to Question 1:

$$\frac{\text{Refill amount of water [l] x Concentration [\%]}}{100} = \text{Addition of agent [l or kg]}$$

$$\frac{\text{(1,200 – 200) [l] x 0.15 [\%]}}{100} = \text{1.5 [l or kg]}$$

Formula and answer to Question 2:

$$\frac{\text{Quantity of liquid available [l] – Residue [l]}}{\text{Water consumption [l/ha]}} = \text{Area to be treated [ha]}$$

$$\frac{\text{1,200 [l] (Tank nominal volume) – 20 [l] (Residue)}}{\text{500 [l/ha] Water consumption}} = \text{2.36 [ha]}$$

10.2.2 Filling table for remaining spray area

- The specified re-fill quantities apply for an application rate of 100 l/ha. For other application rates, the re-fill quantity increases by a multiple.
- Take account of the residual quantity in the boom.

Dis-tance	Working width [m]													
	15	16	18	20	21	24	27	28	30	32	33	36	39	40
[m]	**Re-fill quantities [l]**													
10	**2**	**2**	**2**	**2**	**2**	**2**	**3**	**3**	**3**	**3**	**3**	**4**	**4**	**4**
20	**3**	**3**	**4**	**4**	**4**	**5**	**5**	**6**	**6**	**6**	**7**	**7**	**8**	**8**
30	**5**	**5**	**5**	**6**	**6**	**7**	**8**	**8**	**9**	**10**	**10**	**11**	**11**	**12**
40	**6**	**7**	**7**	**8**	**8**	**10**	**11**	**11**	**12**	**13**	**13**	**14**	**15**	**16**
50	**8**	**8**	**9**	**10**	**11**	**12**	**14**	**14**	**15**	**16**	**17**	**18**	**19**	**20**
60	**9**	**10**	**11**	**12**	**13**	**14**	**16**	**17**	**18**	**19**	**20**	**22**	**23**	**24**
70	**11**	**11**	**13**	**14**	**15**	**17**	**19**	**20**	**21**	**22**	**23**	**25**	**27**	**28**
80	**12**	**13**	**14**	**16**	**17**	**19**	**22**	**22**	**24**	**26**	**26**	**29**	**30**	**32**
90	**14**	**15**	**16**	**18**	**19**	**22**	**24**	**25**	**27**	**29**	**30**	**32**	**34**	**36**
100	**15**	**16**	**18**	**20**	**21**	**24**	**27**	**28**	**30**	**32**	**33**	**36**	**38**	**40**
200	**30**	**32**	**36**	**40**	**42**	**48**	**54**	**56**	**60**	**64**	**66**	**72**	**74**	**80**
300	**45**	**48**	**54**	**60**	**63**	**72**	**81**	**84**	**90**	**96**	**99**	**108**	**114**	**120**
400	**60**	**64**	**72**	**80**	**84**	**96**	**108**	**112**	**120**	**128**	**132**	**144**	**152**	**160**
500	**75**	**80**	**90**	**100**	**105**	**120**	**135**	**140**	**150**	**160**	**165**	**180**	**190**	**200**

10.3 Filling the spray liquid tank via the filling opening

10.3.1 Filling the spray liquid tank through the filling opening

WARNING

Danger for persons / animals due to accidental contact with spray liquid when filling the spray liquid tank!

- When filling the spray liquid tank from a drinking water hose, never establish a direct connection between the filling hose and the content of the spray liquid tank. This is the only way to ensure that spray liquid is not drawn into or pressed into the drinking water line.

→ Fasten the end of the filling hose at least 10 cm above the filling opening of the spray liquid tank. The produced free outflow provides maximum safety against spray liquid flowing back into the drinking water line.

1. Determine the precise water filling quantity (refer to the section "Calculating the filling quantity or re-fill quantity", Seite 133).
2. Open the hinged/screw lid on the filling opening. 3. Fill the spray liquid tank via the filling opening with a "free flow" from the mains water supply.
4. Always pay attention to the fill level indicator during filling.
5. At the latest, you should stop filling the spray liquid tank
   - when the pointer on the fill level indicator reaches the fill limit mark.
   - before the field sprayer's authorised load is exceeded by the quantity of liquid poured in.
6. Close the filling opening properly using the hinged/screw lid.

10.3.2 Filling the spray liquid tank via the suction port

Befüllen Sie vorzugsweise aus einem geeigneten Behälter und nicht aus offenen Wasserentnahmestellen.

Beachten Sie die Vorschriften bei der Befüllung des Spritzflüssigkeitstanks über den Saugschlauch aus offenen Wasser-Entnahmestellen.

WARNING

Damage to the suction valve chest caused by pressure filling via the suction connection!

The suction connection is not suitable for pressure filling. This also applies for filling from a higher-elevation source.

1. Determine the precise water filling quantity (see section "Calculating the filling or re-fill quantity", Seite 133).
2. Couple the suction hose with the suction connection and the water point.
3. Run the pump.
4. Pressure valve chest **DA** in position + .
5. Switch tap **IJ** in position **0**.
6. Suction valve chest **SA** in position :

→ Filling starts.

7. Set the main agitator setting tap **RW** to the maximum.

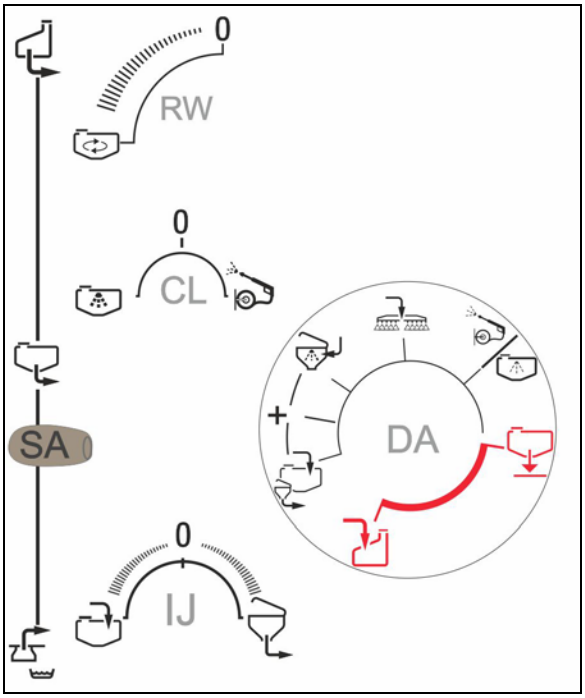

8. Switch tap **IJ** in position .

→ Increasing the suction capacity by switching on the injector.

If necessary: simultaneous filling of the flushing water tank, see 138.

9. Flushing in the agents while filling, see page 140.

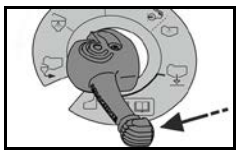

Interrupt the filling process if flushing is not possible before the nominal fill level is reached.

a) Block the pressure valve chest **DA**.

(Not possible with FlowControl)

or

b) Suction valve chest **SA** in position

(Risk of contamination: subsequent filling of the flushing water tank using the suction connection is forbidden)

10. Shortly before the nominal fill level is reached:

    Switch tap **IJ** to position **0**.

When the tank is full:

11. If necessary: remove the suction hose from the extraction point so that the pump is able to suck up all remaining liquid in the suction hose.

12. Suction valve chest **SA** in position

13. Pressure valve chest **DA** in position 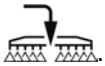 .

- The injector may only be switched on after the pump has drawn in water.
- Do not use the injector with FlowControl.
- The water being drawn through the injector is not filtered through the suction filter.

Special function: fill the flushing water tank with the suction hose while filling the spray liquid tank.

WARNING

Contamination of the flushing water tank with spray agent when filling through the suction hose with the spraying pump.

You must observe the following safety measures:

- Before filling the flushing water tank with the spraying pump, the spray liquid tank must be filled with at least 600 l of water (cleaning the valve chest).
- Before filling the flushing water tank with the spraying pump, clean the implement thoroughly.

WARNING

Damage to crops and soils due to critical agents during suction filling of the flushing water tank:

- Clean the implement thoroughly beforehand.
- Suction filling is forbidden if contamination of the flushing water tank with critical agents is to be expected.

→ The spray liquid tank must first be filled with at least 600 l to clean the valve chest)

1. Switch tap **IJ** in position **0**.
2. Pressure valve chest **DA**: select position .

→ Filling of the flushing water tank starts.

As soon as the flushing water tank is full (observe the fill level):

3. Pressure valve chest **DA**: select position .

→ Resume filling of the spray liquid tank.

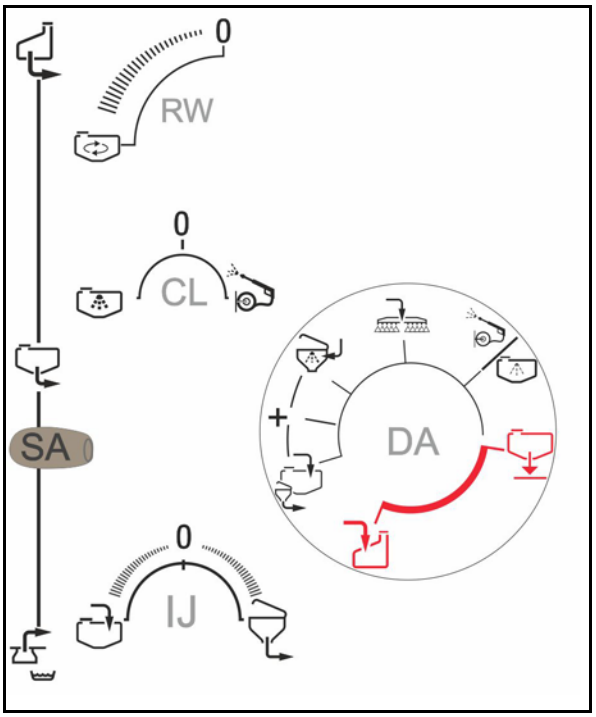

10.3.3 Filling the spray liquid tank through the pressure connection

CAUTION

- Maximum permitted water pressure: 8 bar
- At a filling capacity greater than 500 l/min, keep the lid of the spray liquid tank open during the filling procedure.

Otherwise, the spray liquid tank can be damaged.

1. Determine the precise water filling quantity (see section "Calculating the filling or re-fill quantity", Seite 133).
2. Couple the pressure hose with the pressure connection and the hydrant.
3. Switch tap **FD** in position .

→ Filling starts.

4. Flushing in the agents while filling, see page 140.
5. Interrupt the filling process if flushing is not possible before the nominal fill level is reached.

→ Switch tap **FD** in position **0**.

6. When the nominal fill level is reached:
   Switch tap **FD** in position **0**

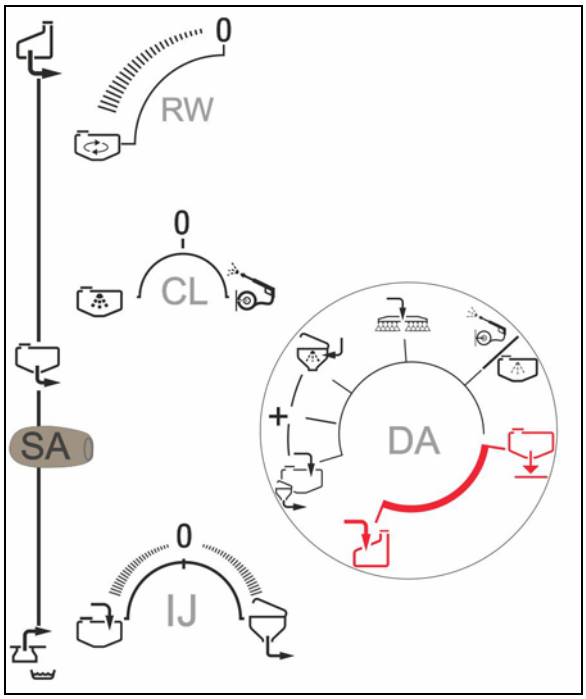

After filling

7. Pressure valve chest **DA** in position .
8. After the filling process, close the supply-side stop tap, relieve the pressure hose, and un-couple the hose from the filling connection.

The hose is still filled with water.

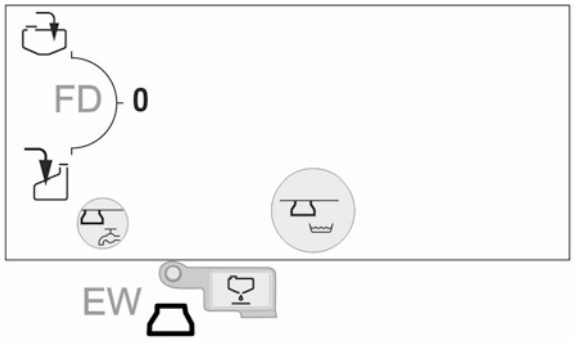

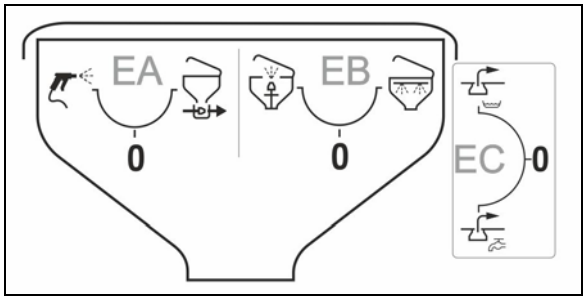

10.4 Flushing in the agents

WARNING

To flush in the agents, wear suitable protective clothing as prescribed by the crop protection product manufacturer!

During the filling process, flush the agents into the spray liquid tank through the induction bowl.

1. Open the induction bowl cover.
2. Sieve in the induction bowl:
   - o use for liquid agents.
   - o do not use for agents in powder form.
3. Pressure valve chest **DA** in position
   - + for suction filling.
   - for pressure filling.
4. Switch tap **EC** in position
   - - for suction filling.
   - - for pressure filling (overfilling of the spray liquid tank possible via the induction bowl. Also for fill stop and switch tap FD at **0**).
5. Switch tap **IJ** in position (suction intensity is adjustable).
6. Agents in powder form: switch tap **EA** in position .

   Liquid agents: switch tap **EB** in position .
7. Pour the quantity of agent calculated and measured for filling the tank into the induction bowl (max. 60 l).
8. Close the induction bowl cover.

→ Draw the contents completely out of the induction bowl.

9. Switch tap **EB, EA** back in position **0**.

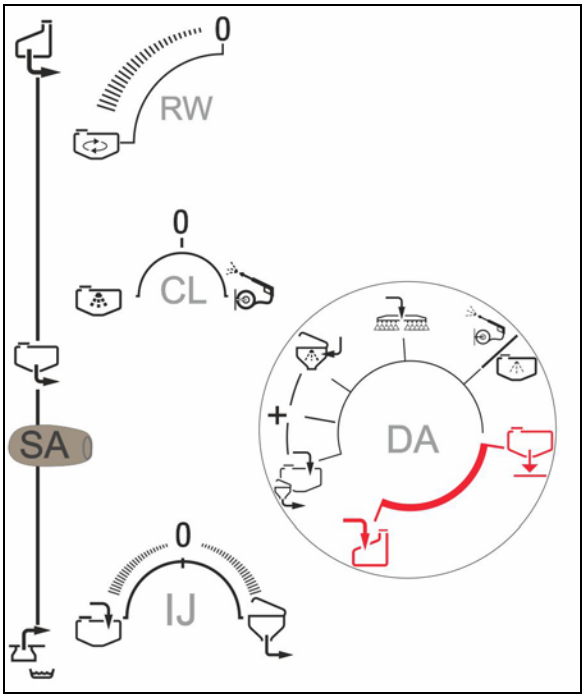

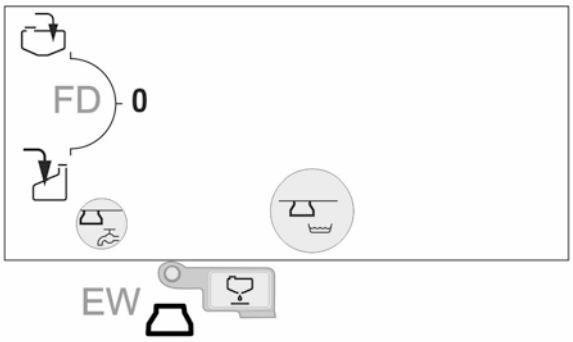

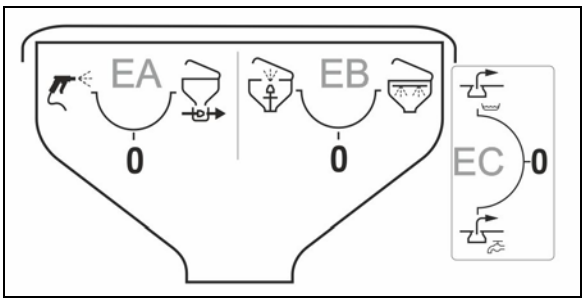

Cleaning canisters

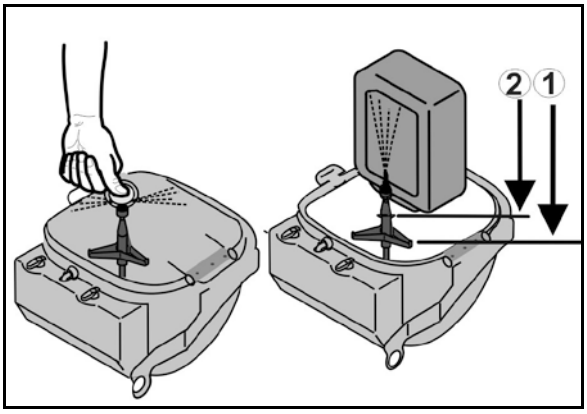

1. Switch tap **EB** in position .
2. Wash the canister or other containers using the canister flushing equipment. First position 1, then position 2.
3. Press the canister down for at least 30 secs.

→ The canister is rinsed with water.

Suction filling:

Pressure valve chest **DA**: Select position to increase the capacity of the canister rinsing.

Pressure filling:

Switch tap **FD**: Select position **0** to increase the capacity of the canister rinsing.

Cleaning the induction bowl

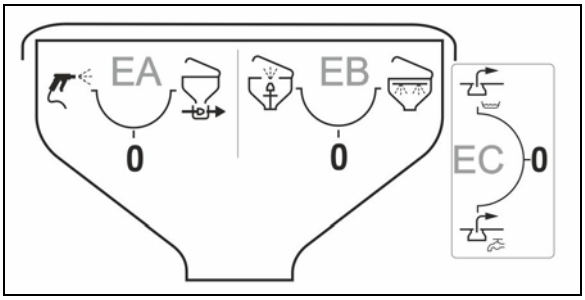

- Switch tap **EB** in position

→ Clean the induction bowl using the ring line.

- Switch tap **EA** in position .

→ Clean the surrounding area with the spray gun.

- Switch tap **EB** in position and actuate the push button with the induction bowl closed.

→ Internal cleaning with pressure nozzle

Before spraying, fully dissolve the urea by recirculating the liquid. When dissolving large quantities of urea, the temperature of the spray liquid drops more sharply; the urea consequently dissolves more slowly. The warmer the water, the faster and more completely the urea can dissolve.

10.5 Filling the flushing water tank through the pressure connection

WARNING

Forbidden contamination of the fresh water tank with crop protection products or spray liquid!

Only fill the fresh water tank with clear fresh water, and never with crop protection product or spray liquid.

Ensure that you always carry enough clear fresh water when operating the field sprayer. Check and fill the fresh water tank when you fill the spray liquid tank.

Maximum permitted water pressure: 8 bar

1. Couple the pressure hose with the pressure connection and the hydrant.
2. Switch tap **FD** in position .

→ Filling starts.

3. Observe the fill level indicator during the filling process.
4. When the nominal fill level is reached:
   - Close the supply-side stop tap.
   - Switch tap **FD** in position **0**.
   - Uncouple the hose from the filling connection.

The hose is still filled with water.

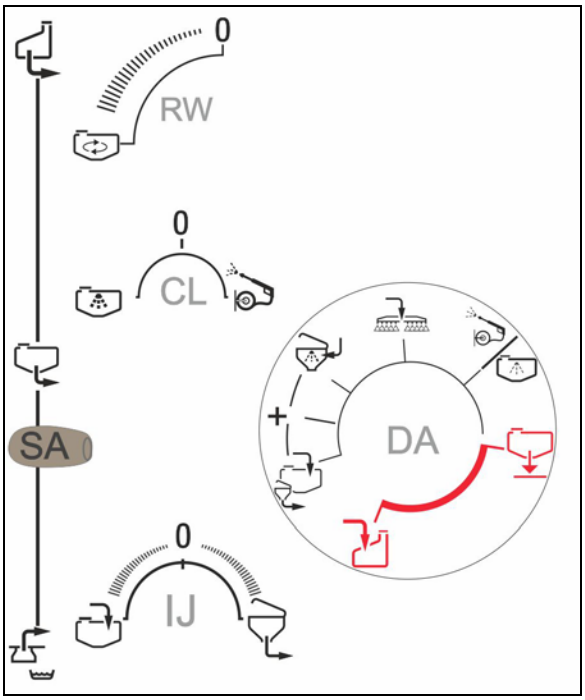

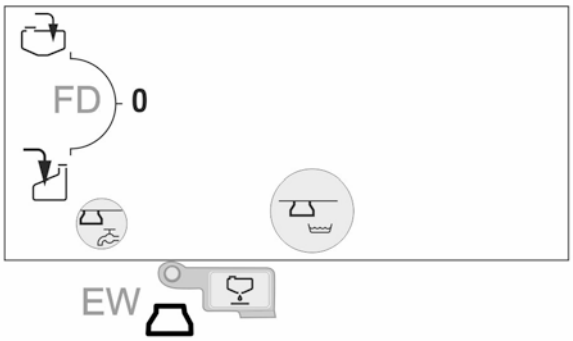

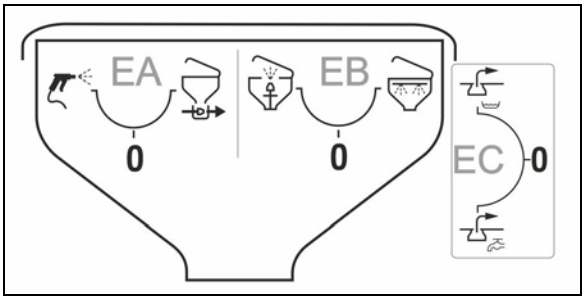

10.6 Spraying operation

Depending on the implement equipment, observe the separate operating manual for the control terminal and the implement control software

Special instructions for spraying operation

- Test the field sprayer by carrying out calibration
  - before the start of the season.
  - in the case of deviations between the actual indicated spray pressure and the spray pressure prescribed in the spray table.
- Before commencing spraying operation, precisely determine the required spray rate with the help of the crop protection agent manufacturer's directions for use (refer to the section "Preparing the spray liquid", Seite 129).
  - Control terminal / AMASPRAY+: Before spraying commences, enter the required spray rate (target rate) into the operating terminal.
  - AMASET+: Before spraying commences, enter the required spray pressure into the operating terminal.
- During spraying operation, precisely adhere to the required spray rate [l/ha]
  - in order to achieve the best possible results from your crop protection measure.
  - to avoid unnecessary pollution of the environment.
- Select the required nozzle type from the spray table before spraying starts, taking account of
  - the intended operational speed,
  - the required spray rate and
  - the required atomisation characteristic (fine, medium or coarse-dropped) of the crop protection agent used for the crop protection measure.

    Refer to the section "Spray tables for flat-fan, anti-drift, injector and airmix nozzles", Seite 191.
- Select the required nozzle size from the spray table before spraying starts, taking account of
  - the intended operational speed,
  - the required spray rate and
  - the target spray pressure.

    Refer to the section "Spray tables for flat-fan, anti-drift, injector and airmix nozzles", Seite 191.
- Select a low operational speed and a low spray pressure to prevent wastage from drifting.

  Refer to the section "Spray tables for flat-fan, anti-drift, injector and airmix nozzles", Seite 191.

- At wind speeds of 3 m/s, take additional drift reduction measures (refer to the section "Measures for drift reduction", Seite 147.
- Even lateral distribution can only be achieved with the swing compensation unlocked.
- Refrain from use if average wind speeds top 5 m/s (leaves and thin twigs move).
- Only switch the sprayer boom on and off during travel to avoid the application of excessive doses.
- Avoid the application of excessive doses from overlapping caused by imprecise bout tracking from one spray path to the next and/or when cornering on the headland with the sprayer boom switched on.
- When increasing operational speed, make sure that the maximum permissible pump drive speed of 550 rpm is not exceeded.
- During spraying operation, constantly check actual spray liquid consumption with reference to the area treated.
- If spraying operation is interrupted due to bad weather, clean the suction filter, the pump, the valve chest and the spray lines. Refer to Seite 160**.**

- Spray pressure and nozzle size influence drop size and the volume of liquid sprayed. The higher the spray pressure, the smaller the droplet diameter of the spray liquid. The smaller droplets are subject to increased, undesirable drifting.
- If the spray pressure is increased, the spray rate also increases.
- If the spray pressure is decreased, the spray rate also decreases.
- If the operational speed is increased while the nozzle size and spray pressure remain constant, the spray rate decreases.
- If the operational speed is decreased while the nozzle size and spray pressure remain constant, the spray rate increases.
- Operational speed and pump drive speed can be selected within broad limits, owing to the automatic, area-based spray rate control.
- The pump delivery capacity is dependent on the pump drive speed. Select the pump drive speed (between 400 and 550 rpm.) so that there is always an adequate flow rate to the sprayer boom and for the agitator. When making this choice, always take account of the fact that more spray liquid needs to be conveyed at higher operational speeds and higher spray rates.

- The agitator normally remains switched on from filling to the end of spraying operation. On this account, the instructions of the agent manufacturer are decisive.
- If there is a sudden significant drop-off in spray pressure, the spray liquid tank is empty.
- Residues in the spray liquid tank can be applied correctly up to a pressure drop of 25%.
- If the spray pressure drops off while conditions remain otherwise unaltered, the suction or pressure filter are blocked.

10.6.1 Applying the spray liquid

- Properly couple the field sprayer to the tractor.
- Before starting spraying, check the following machine data on the operating terminal
  - the values for the permitted spray pressure range of the spraying nozzles installed in the sprayer boom.
  - the value "Pulses per 100m".
- Check the indicated spray pressure during spraying operation.
  Control terminal / AMASPRAY+: Ensure that the indicated spray pressure does not deviate under any circumstances by more than ± 25 % from the target spray pressure given in the spray table, e.g. by changing the spray rate using the plus/minus buttons. Larger deviations than this from the target spray pressure make it impossible to achieve the best possible results from your crop protection measure and cause pollution of the environment.
- Decrease or increase the operational speed until you are back within the permissible spray pressure range for the target spray pressure.
- Never keep spraying until the spray liquid tank is empty (does not apply at the end of spraying operation). Refill the spray liquid tank before the fill level reaches approx. 50 litres.
- At the end of spraying operation, when the fill level falls below approx. 50 litres, switch off the agitator.

Example:

Required spray rate:	200 l/ha
Intended operational speed:	8 km/h
Nozzle type:	AI
Nozzle size:	'05'
Permissible pressure range for the spraying nozzle when fitted:	min. pressure 2 bar max. pressure 7 bar
Target spray pressure:	3.7 bar
Permissible spray pressure: 3.7 bar ±25 %	min. 2.8 bar and max. 4.6 bar

1. Prepare and stir the spray liquid correctly in accordance with the instructions from the crop protection product manufacturer. For more information, see the "Preparing the spray liquid" section, Seite 129.
2. Pressure valve chest **DA** in position 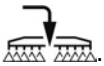 .
3. Suction valve chest **SA** in position .
4. Switch on the agitator **RW**
   The stirring performance can be infinitely adjusted.
5. Switch on the control terminal.
6. Unfold the sprayer boom, see page 83 for this.
7. Depending on the nozzles being used, set the working height of the sprayer boom (gap between the nozzles and the crop) according to the spray table.
8. Enter the value for the required application rate.
9. Run the pump at pump operating speed.
10. Switch on sprayers through the control terminal.

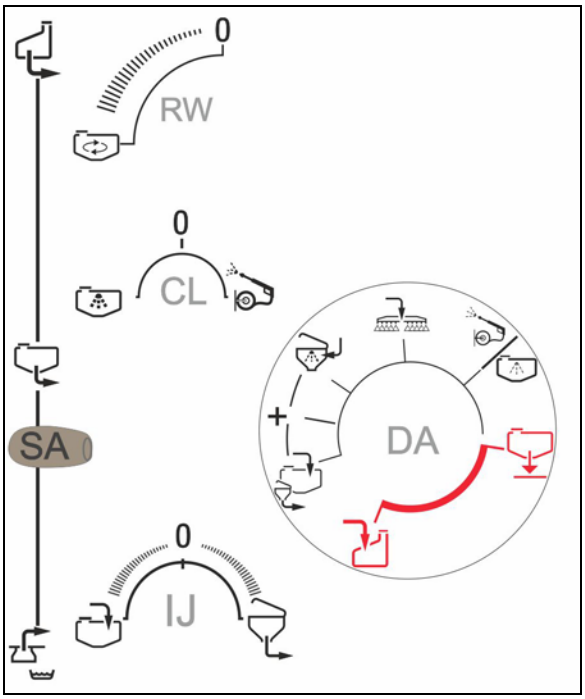

ISOBUS	AmaSpray	AmaSet
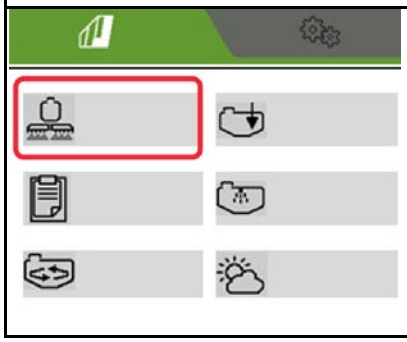	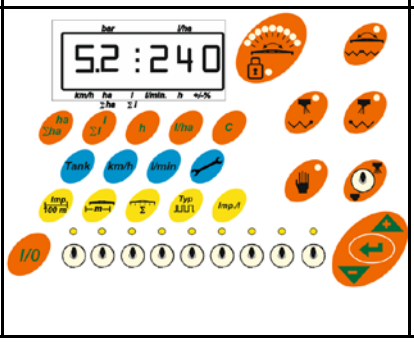	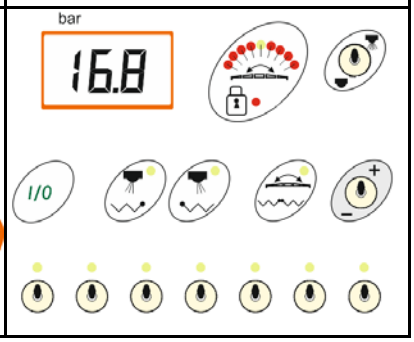

10.6.2 Driving to the field with the agitator switched on

1. Switch off the spraying.
2. Switch on the PTO shaft.
3. Switch tap **RW**: select the intensity of the agitator.

10.6.3 Drift reduction measures

- Reschedule treatment for the early morning or the evening hours (there is generally less wind).
- Choose larger nozzles and a higher water spray rate.
- Reduce spray pressure.
- Precisely maintain the working height of the boom, because the risk of drifting rises very sharply as the distance between the nozzles increases.
- Reduce operational speed (to below 8 km/h).
- Use so-called anti-drift (AD) nozzles or injector (ID) nozzles (nozzles which produce a high proportion of coarse drops).
- Observe the distance requirements of the respective crop protection agent

10.6.4 Diluting the spray liquid with flushing water

1. Run the pump.
2. Pressure valve chest **DA** in position .
3. Suction valve chest **SA** in position

→ The spray liquid is diluted with flushing water.

4. After diluting:

- Pressure valve chest **DA** back in position
- Suction valve chest **SA** in position

Observe the display for the required quantity of flushing water.

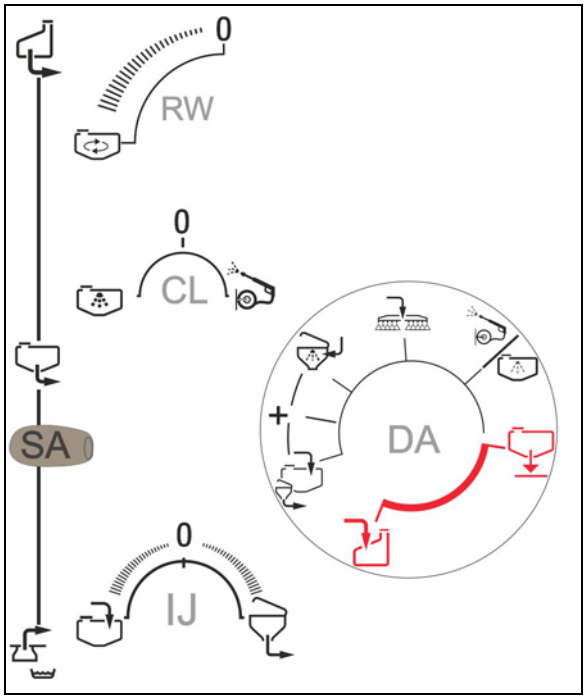

The spray agent can be diluted for 2 reasons:

- To get rid of excess residual quantities.

  Excess residual quantities in the spray liquid tank are initially diluted with 10 times the quantity of flushing water to then spray them out on the field that has already been treated.
- Increase the volume of spray liquid to treat a remaining area.

The spray line is flushed on machines with nozzle control. When restarting the spraying, two to five minutes will elapse until concentrated spray liquid can be applied.

10.6.5 Continual internal cleaning

With the continuous **internal cleaning**, the spray liquid tank is pre-cleaned before the actual cleaning procedure.

Towards the end of the application, the continuous internal cleaning can be switched on during spraying operation.

- Using a rocker switch
-

Using the ISOBUS control terminal

10.7 Residues

There are three types of residue:

- excessive residue remaining in the spray liquid tank when the spraying operation is finished

→ This excessive residue is discharged diluted or pumped-out and disposed of.

- the technical residue that remains in the spray liquid tank, the suction chest and the spray line when the spray pressure drops off by 25%

  The suction chest is composed of the suction filter, pump and pressure controller sub-assemblies. Observe the values for the technical residues given on page 97.

→ This technical residue is discharged diluted onto the field while cleaning the field sprayer.

- The final residue that remains in the spray liquid tank, the suction chest and the spray line after being cleaned with air discharge from the nozzles.

→ This final diluted residue is drained off after cleaning.

Disposing of residues

- Ensure that the residue in the spray line is still being sprayed at an undiluted concentration. Always spray this residue on an untreated area. The distance needed to use up this undiluted residue can be found in the section entitled "Spray lines and nozzles", Seite 97. The residue contained in the spray line is dependent on the sprayer boom working width.
- When the residue in the spray liquid tank falls below 5%, switch off the agitator to spray the spray liquid until the tank is empty. With the agitator switched on, the technical residue increases compared to the specified values.
- Measures intended for the user's protection apply when emptying residues. Observe the instructions from the crop protection agent manufacturer and wear appropriate protective clothing.

Formula for calculating the required distance in [m] for spraying out the undiluted residue in the spray line

$$\textbf{Required distance [m]} = \frac{\textbf{Undiluted residue [l] x 10,000 [m}^2\textbf{/ha]}}{\textbf{Spray rate [l/ha] x working width [m]}}$$

10.7.1 Spraying out the diluted residual quantity at the end of spraying operations

1. Switch off sprayers on the control terminal.
2. Run the pump.
3. Dilute the residual quantity with 10 times the amount of flushing water.
4. Switch of the agitators.
5. Switch on sprayers on the control terminal.

→ If possible, first spray out the undiluted spray liquid from the spray line on an untreated remaining area.

→ Spray out the diluted residual quantity on the treated area.

→ Keep flushing the diluted residues until air escapes from the nozzles.

6. Switch off sprayers on the control terminal.
7. Cleaning the field sprayer.

When spreading residue, observe the maximum permissible application quantity of the agent on areas already treated.

10.7.2 Emptying the spray liquid tank using the pump

1. Couple a suitable emptying hose from the external tank to the implement-side emptying connection.
2. Check the position of the suction valve chest **SA** .
3. Pressure valve chest **DA** in position .
4. Run the pump.

→ Emptying procedure starts.

5. After emptying, pressure valve chest **DA** in position .
6. Interrupt the pump drive.
7. Uncouple the hose.

The hose is still filled with spray liquid.

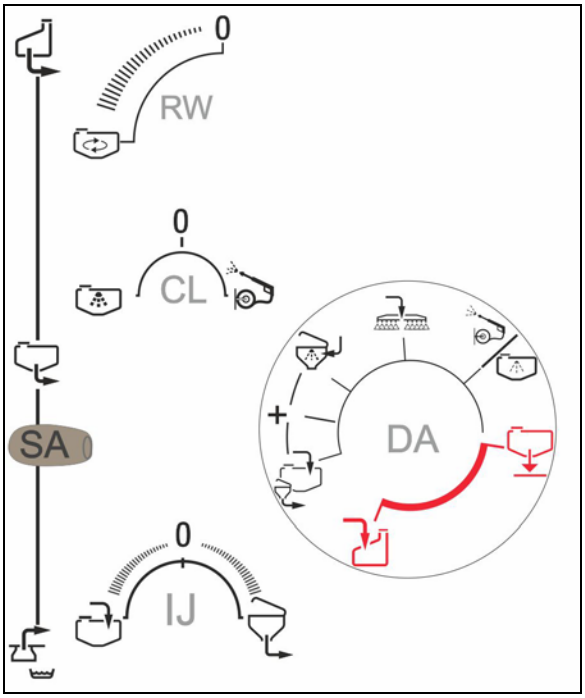

FlowControl: Before emptying, pump the contents of the front tank into the spray liquid tank.

→ When the spray liquid tank of the sprayer is empty, the front tank can no longer be emptied.

11 Cleaning the implement after operation

- Keep the exposure time as short as possible, for example by daily cleaning after the spraying operation is completed. Do not leave the spray liquid in the spray liquid tank for an unnecessarily long period, e.g. overnight.

  The service life and reliability of the field sprayer mainly depend on how long the materials of the field sprayer are exposed to the crop protection agent.
- Clean the field sprayer thoroughly before applying a different crop protection agent.
- Carry out the cleaning process on the field where you last carried out the treatment.
- Carry out the cleaning procedure using water from the flushing water tank.
- You can carry out the cleaning process in the courtyard if you have a collecting facility installed (e.g. a Biobed).

  Observe all national regulations involved.
- When spreading residual quantities on treated areas, observe the maximum permissible application rate for the agents.

- Perform a quick cleaning daily.
- Perform an intensive cleaning:
  - before a critical agent change,
  - before taking out of operation for a longer period.
- Perform the cleaning on the field while driving, since cleaning water is applied intermittently.
- The fill level of the flushing water tank must be sufficient.
- Prerequisite: tank fill level < 1 % (tank as empty as possible).

11.1 Quick cleaning of the empty field sprayer

1. Run the pump.
2. Check the pressure valve chest: Position .
3. Suction valve chest **SA** in position
4. Open agitator **RW** completely.

→ Flush the agitators with 10 % of the flushing water supply.

→ The DUS lines are flushed.

5. Switch off the agitator **RW**.
6. Pressure valve chest **DA** in position .
7. Switch tap **CL** in position .

→ Perform internal cleaning with 10 % of the flushing water supply.

8. Switch tap **CL** in position **0.**
9. Suction valve chest **SA** in position .
10. Pressure valve chest **DA** in position .
11. Spreads residues already diluted on the treated area when driving.
12. Switch spraying on and off several times.

The valves and return lines are flushed by switching on and off.

Keep applying the diluted residues until air escapes from the nozzles.

If necessary, also switch the boundary nozzles.

Repeat this procedure three times.

Third pass:

- rinsing of the DUS and agitators is not necessary during the third pass.
- use the rest of the flushing water supply for the internal cleaning.

13. Drain the final residue, see page 154.
14. Cleaning the suction filter and pressure filter, see page 156, 157.

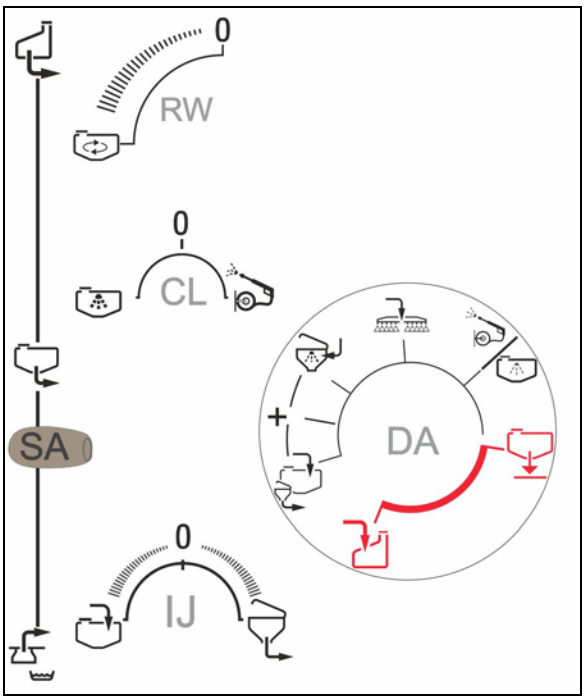

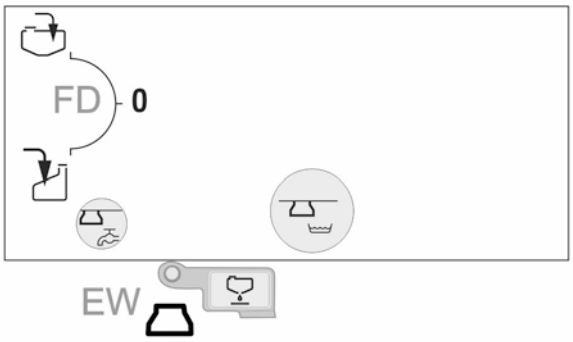

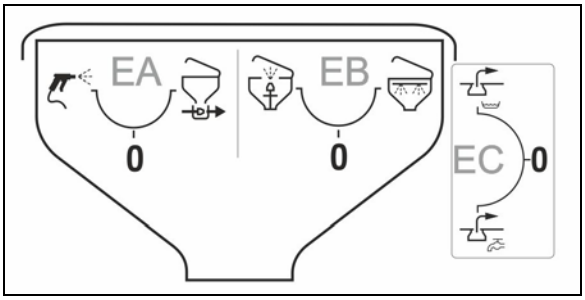

11.2 Intensive cleaning of the sprayer during a critical agent change

1. Clean the sprayer in three runs as always, see page 153
2. Fill up flushing water tank.
3. Clean the sprayer, two runs, see page 153.
4. If the sprayer has been previously filled via the pressure connector:

   Clean the induction bowl with the spray gun and evacuate the contents of the induction bowl.
5. Drain the final residue, see page 154.
6. By all means, clean the suction filter and pressure filter, see page 156, 157.
7. Clean the sprayer, one run, see page 153.
8. Drain the final residue, see page 154.

11.3 Draining the final residual quantities

- On the field: Spread the final residues over the field.

  → Observe the legal stipulations.
- At the farm:
  - o Place a suitable collecting container under the drain opening of the suction valve chest and collect the final residual quantity.
  - o Dispose of the collected spray liquid residual quantity in accordance with the corresponding legal guidelines.
  - o Collect the spray liquid residual quantities in suitable tanks.

1. Place a suitable collecting container under the outlet opening on the suction side.
2. Check the position of the suction valve chest **SA**: .
3. Open the stop tap **EW** under the implement.

→ Drain the residual quantity.

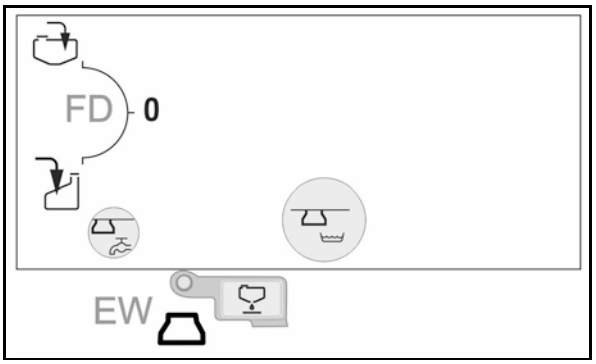

4. Open the stop tap **DE** on the pressure filter.

→ Drain the residual quantity from the pressure filter.

5. Close the stop taps **EW** and **DA** again.

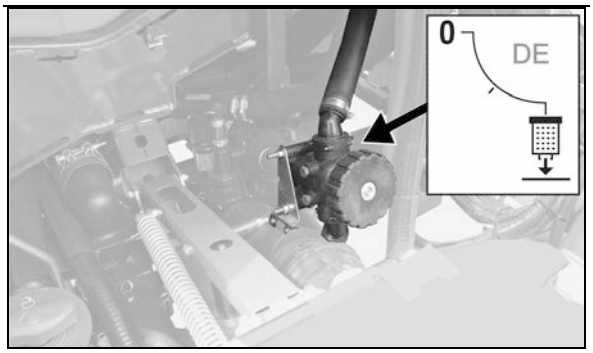

11.4 Performing chemical cleaning.

- Chemical cleaning is recommended before critical agent changes and before the implement is decommissioned for a longer period of time.
- Perform the chemical cleaning after the intensive cleaning.

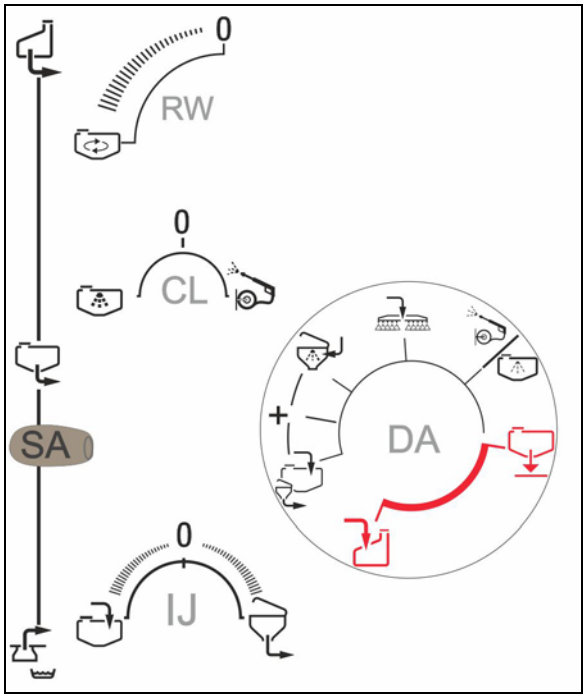

1. Clean the implement.
2. Fill the spray liquid tank with 100 l of water and add the cleaning agent according to the instructions provided by the manufacturer.

To flush in the cleaning agent, the spray liquid tank must be filled with at least 200 l of water.

3. Run the pump.
4. Perform internal cleaning (5 minutes).
   4.1 Pressure valve chest **DA** in position .
   4.2 Switch tap **CL** in position .
   4.3 Switch tap **CL** back in position 0.
5. DUS: Flush the boom (5 minutes).
   5.1 Pressure valve chest **DA**: Select position .
   5.2 In doing so, operate the agitator **RW** at maximum intensity for one minute.
6. Spray out the mixture on the previously treated field.

List of available cleaning agents

Product	Manufacturer
Agro-Quick	Adama
JET CLEAR	Sudau agro
Proagro Spritzenreiniger	proagro GmbH

11.5 Cleaning the suction filter

- Clean the suction filter on a daily basis after cleaning the field sprayer.
- Grease the O-rings.
  Make sure that the O-ring seals are correctly fitted.
- Ensure that there are no leaks after installation

Cleaning the suction filter when tank is full

1. Run the pumps.
2. Attach the sealing cap to the suction coupling.
3. Suction valve chest **SA** in position .
4. Pressure valve chest **DA** in position .
5. Open agitator **RW** completely.
6. Pressure valve chest **DA**: select position .
7. Bleed the suction filter through the venting valve (20 seconds).

→ The contents of the filter cup are sucked out.

8. Remove the suction filter, clean and reinstall.
9. Interrupt the pump drive.

The injector is contaminated with spray liquid.

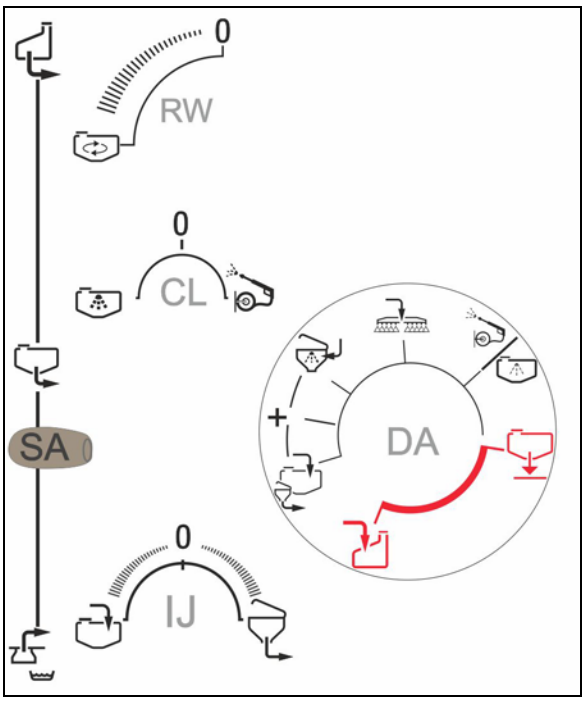

(1) Suction filter

(2) Venting valve

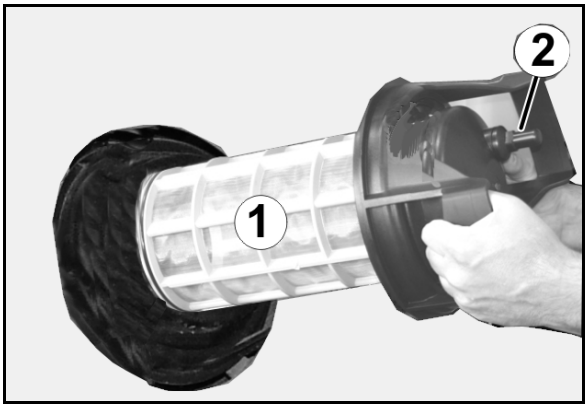

11.6 Cleaning the pressure filter

- Fold down the induction bowl beforehand.
- Grease the O-rings.
  Make sure that the O-ring seals are correctly fitted.
- During installation, pay attention to the correct position of the filter mount.

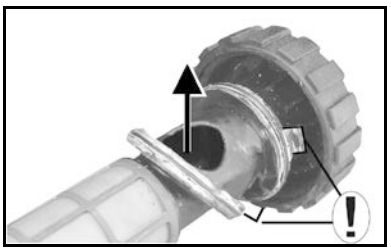

- Ensure that there are no leaks after installation.

Cleaning the pressure filter when the spray liquid tank is full

The spraying pump may not be driven!

1. Switch off the agitator **RW**.

Single nozzle control:

Close the return flow stop tap on the sprayer boom (position 0)

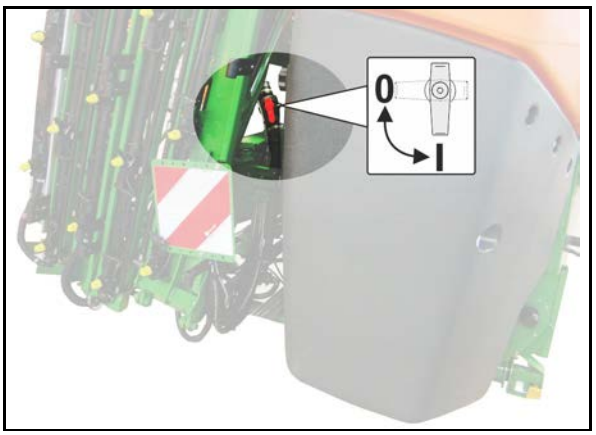

Part-width section control:
Lock the pressure circulation flushing stop tap. Close the return flow on the sprayer boom (Position **0**).

2. Pressure valve chest **DA**: block the liquid circulation.
3. Place a collecting bucket under the outlet.

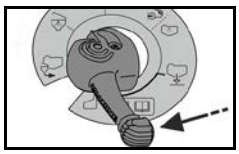

4. Drain the filter using the stop tap **DE**.
5. Undo the sleeve nuts.
6. Remove the pressure filter and clean with water.
7. Refill the pressure filter.
8. Afterwards, put the control elements back to their initial position.

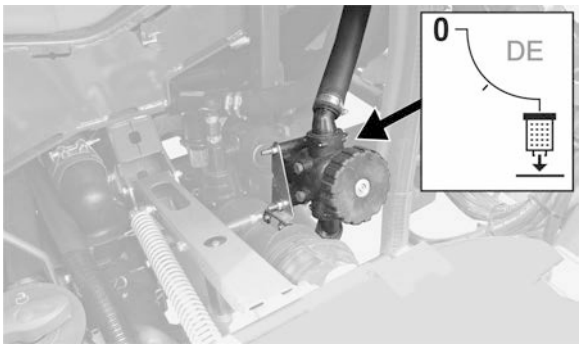

11.7 Cleaning the sprayer when the spray liquid tank is full (work interruption)

Flushing the boom with flushing water

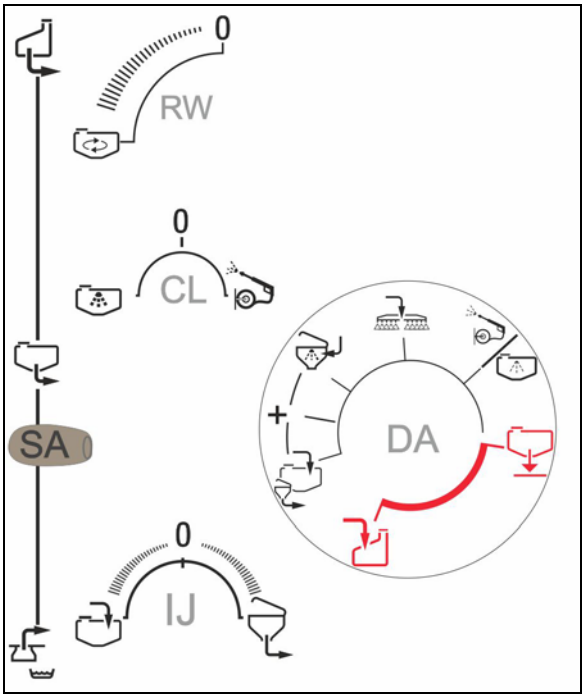

1. Close agitator **RW**.
2. Suction valve chest **SA** in position .
3. Run the pump, set the pump speed to 450 rpm.
4. Flush the boom:

Without DUS

Spread at least 50 litres of flushing water while driving on an untreated area.

→ The sprays are cleaned with flushing water.

with DUS

→ The sprays are cleaned with flushing water. For this purpose, use two litres of flushing water for each metre of working width (observe the fill level).

Briefly switch on spraying.

→ The nozzles are flushed.

Switch the pump off immediately as the agent concentration drops.

The spray liquid tank and agitators are not cleaned!

Continuing the spraying operation

1. Run the pump.
2. Run the agitator **RW** for at least 5 minutes at maximum position.

11.8 External cleaning

UF with front tank: FlowControl must be switched off, otherwise the concentration in the front tank will be diluted.

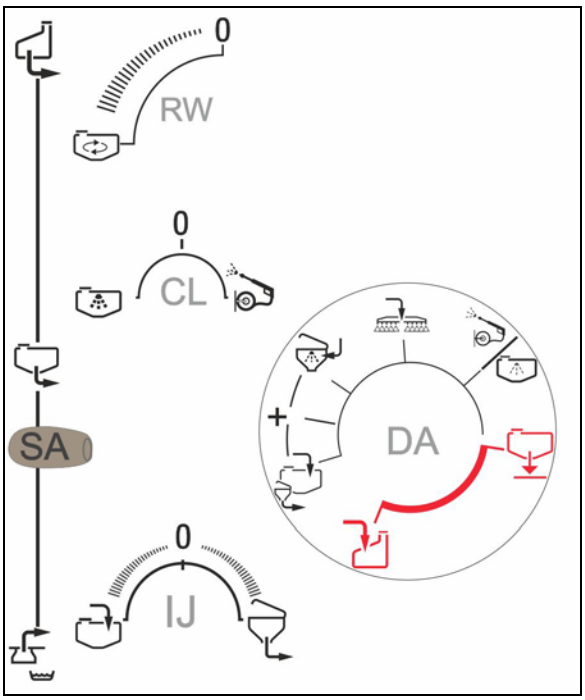

1. Run the pump.
2. Suction valve chest **SA** in position .
3. Pressure valve chest **DA** in position .
4. If internal cleaning was not previously performed:

   Switch tap **CL** in position .
   Open switch tap **IJ** for 30 seconds until flushing water emerges from the nozzles.

   Switch tap **CL** in position .
5. Clean the field sprayer and the sprayer boom with the spray gun.
6. Put the control elements back.

12 Faults

WARNING

Risk of crushing, shearing, cutting, being caught and/or drawn in, trapping or impact through

- **unintentional falling of the machine raised using the tractor's three-point linkage.**
- **unintentional falling of raised, unsecured machine parts.**
- **unintentional start-up and rolling of the tractor-machine combination.**

Secure the tractor and the machine against unintentional start-up and rolling before eliminating faults on the machine. See page 113.

Wait for the machine to stop before entering the machine danger area.

Fault	Cause	Remedy
There is no suction from the pump	Blockage on the suction side (suction filter, filter insert, suction hose).	• Remove the blockage.
	Pump is sucking in air.	• Check the hose connection of the suction hose (optional) on the suction port for leak tightness.
The pump does not have any power	Suction filter and filter insert dirty.	• Clean suction filter and filter insert.
	The valves are jammed or damaged.	• Change the valves.
	Pump is sucking in air, recognisable from the air bubbles in the spray liquid tank.	• Check the hose connections on the suction hose for leak tightness.
The spray cone vibrates	Irregular delivery flow from the pump.	• Check, and if necessary replace, the suction and pressure-side valves (see Seite 179).
Oil/spray liquid mixture in the oil filler neck or clearly visible consumption of the oil	Pump diaphragm defective.	• Change all six piston diaphragms (see Seite 179).
The required spray rate entered is not achieved	High operational speed; low pump drive speed;	• Reduce the operational speed and increase the pump drive speed until the fault message disappears and the audible alarm signal stops
There has been a deviation from the permissible spray pressure range for the nozzle fitted to the sprayer boom	Deviation from the prescribed operational speed, which has an effect on the spray pressure	• Alter your operational speed to return to the prescribed operational speed range set for spraying operation

13 Cleaning, maintenance and repairs

WARNING

Risk of crushing, shearing, cutting, being caught and/or drawn in, or impact through

- **unintentional falling of the machine raised using the tractor's three-point linkage.**
- **unintentional falling of raised, unsecured machine parts.**
- **unintentional start-up and rolling of the tractor-machine combination.**

Secure the tractor and machine against unintentional start-up and rolling, before carrying out cleaning, maintenance or repair work on the machine; see page 113.

WARNING

Risk of crushing, shearing, cutting, being caught and/or drawn in, or impact through unprotected danger points.

- Mount protective equipment removed when cleaning, maintaining and repairing the machine.
- Replace defective protective equipment with new equipment.

DANGER

- **When carrying out maintenance and repair, observe the safety instructions, particularly "Field sprayer operation" section, Seite 34.**
- **You may only carry out maintenance or repair work under moving machine parts that are in a raised position if such parts are secured with suitable, positive-fit locking devices against accidental lowering.**

Before each start-up

1. Check hoses/tubes and connection pieces for any visually obvious defects/leaking connections.
2. Repair any areas of chafing on hoses and pipes.
3. Immediately replace worn or damaged hoses and pipes.
4. Immediately repair leaking connections.

- Regular and proper maintenance will keep your trailed sprayer in good condition for a long time, and will prevent early signs of wear. Regular and proper maintenance is a requirement of our warranty conditions.
- Use only genuine AMAZONE spare parts (see "Spare and wear parts and aids" section, page 17).
- Use only genuine AMAZONE replacement hoses, and hose clamps made of V2A for assembly.
- Specialist knowledge is the requirement for carrying out testing and maintenance operations. This specialist knowledge is not given here in this operating manual.
- Observe environmental protection measures when carrying out cleaning and maintenance work.
- Observe legal requirements when disposing of lubricants, e.g. oils and grease. Also affected by these legal requirements are parts that come into contact with these lubricants.
- Do not exceed a greasing pressure of 400 bar when greasing with high pressure grease guns.
- The following are prohibited:
  - drilling the running gear.
  - drilling through pre-existing holes on the transport frame.
  - welding load-bearing components.
- Protective measures are necessary, such as covering lines or extending lines in particularly critical locations
  - during welding, drilling and grinding work.
  - when working with cut-off wheels near plastic lines and electric wires.
- Clean the field sprayer thoroughly with water before carrying out repair work.
- Carry out repair work on the field sprayer with the pump switched off.
- Thorough cleaning must be carried out before repair work can be carried out inside the spray liquid tank. Keep out of the spray liquid tank.
- Disconnect the machine cable and power supply from the on-board computer when carrying out any cleaning or maintenance work. This applies especially to welding on the machine.

13.1 Cleaning

- Pay particular attention to the brake, air and hydraulic hose lines.
- Never treat brake, air and hydraulic hose lines with benzene, benzene, petroleum or mineral oils.
- After cleaning, grease the machine, in particular after cleaning with a pressure washer / steam jet or liposoluble agents.
- Observe the statutory requirements for the handling and removal of cleaning agents.

Cleaning with a pressure washer / steam jet

- Always observe the following points when using a pressure washer / steam jet for cleaning:
  - Do not clean any electrical components.
  - Do not clean any chromed components.
  - Never aim the cleaning jet of the cleaning nozzle of the high pressure cleaner/steam jet directly at lubrication points, bearings, rating plates, warning signs, and stickers.
  - Always maintain a minimum jet distance of 300 mm between the pressure washer or steam jet cleaning nozzle and the machine.
  - The set pressure of the high-pressure cleaner / steam jet must not exceed 120 bar.
  - Comply with safety regulations when working with pressure washers.

13.2 Winter storage and long periods out of operation

For winter storage, the remaining water / spray liquid is diluted with a sufficient amount of antifreeze to prevent frost damage.

1. Clean the implement and empty it completely.
2. Fill antifreeze into the flushing water tank through the filling opening.
3. Start the spraying pump.
4. Run the pump for continuous internal cleaning (if equipped).
5. Suction valve chest SA in position , pressure valve chest DA in , allow flushing water to circulate briefly.
6. Pressure valve chest in position , pump antifreeze into the spray liquid tank.
7. Recirculate antifreeze in the entire liquid circuit.

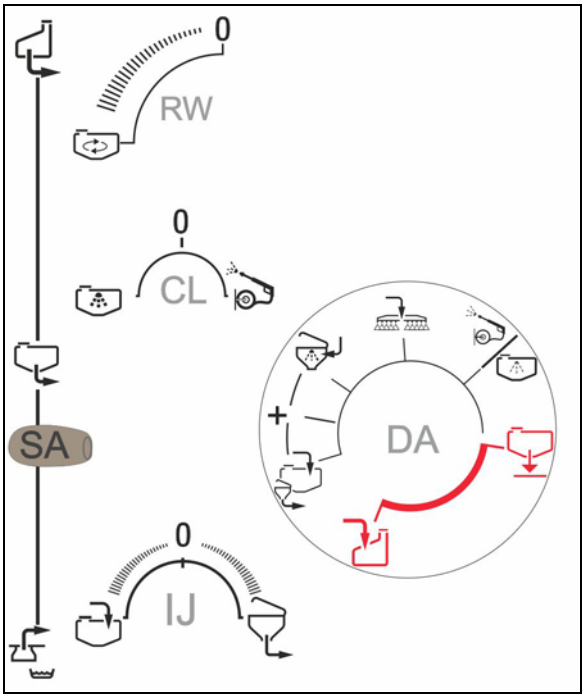

To do so, put the pressure tap DA in the following position:

- + and change positions on switch tap IJ.

  Change the positions of switch taps EA, EB, EC on the induction bowl, actuate the corresponding functions for 10 seconds and evacuate the content.

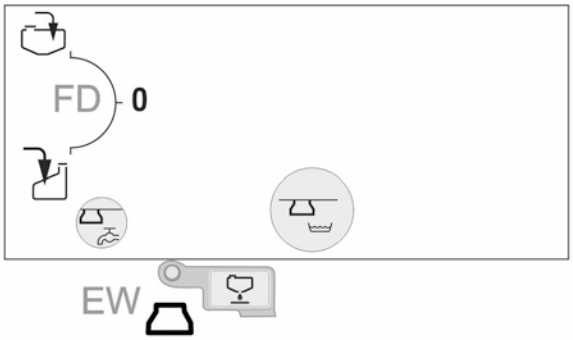

- and change the positions on switch tap CL.
  Spray the external cleaning for 60 seconds into the induction bowl.

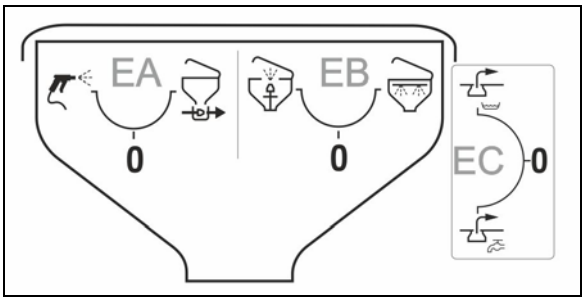

- and evacuate the induction bowl using switch tap IJ.
- and switch the agitator on and off at maximum.

  Unfold the boom.

  DUS: Allow the antifreeze to circulate for 5 minutes.

8. Switch on spraying until the antifreeze emerges from the nozzles.

⚠ Collect the sprayed liquid!

⚠ Check the sprayed liquid for sufficient frost protection! If necessary, add more anti-freeze and repeat the procedure.

9. Empty the spray liquid tank using the pump, see page 150.

→ Pump the antifreeze and spray liquid mixture into a suitable tank, re-use or dispose of properly.

10. Drain the suction filter insert and pressure filter insert.

11. Remove the hose from the pressure sensor (1) to drain the pressure sensor.

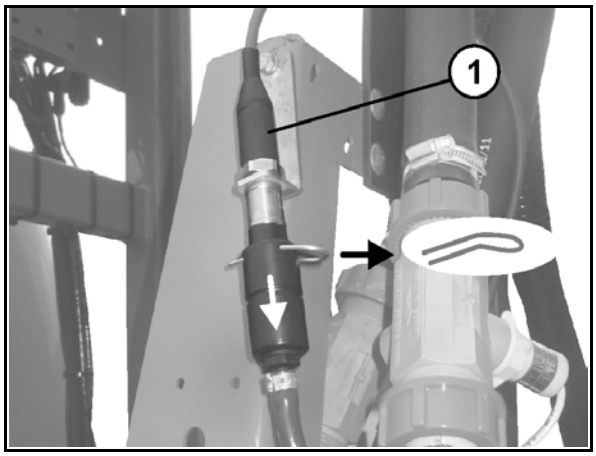

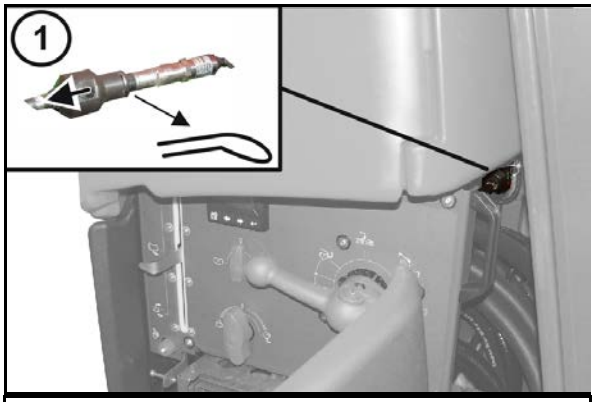

Comfort package

12. Drain the hand wash facility.

13. Lubricate the cardan joints of the universal joint shaft and grease the profile tubes for longer periods out of operation.

14. Perform an oil change on the pumps.

15. Store the pressure gauge and any other electronic accessories in a place where they are safe from frost!

13.3 Lubrication instructions

Lubricants

For lubrication, use a lithium saponified, multipurpose grease with EP additives:

Company	Lubricant designation	
	Normal use conditions	Extreme use conditions
ARAL	Aralub HL 2	Aralub HLP 2
FINA	Marson L2	Marson EPL-2
ESSO	Beacon 2	Beacon EP 2
SHELL	Retinax A	Tetinax AM

Lubricating the PTO shaft

For winter operation, grease the protective tubes to prevent them from freezing.

Also observe the installation and service instructions from the PTO shaft manufacturer, which are fastened to the PTO shaft.

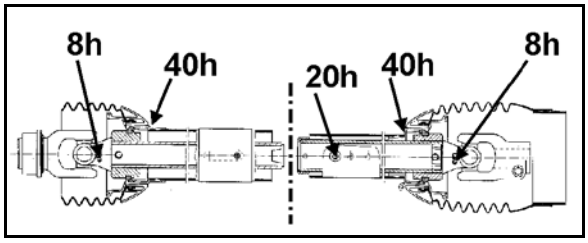

13.4 Securing the raised boom

Secure the boom with a locking pin against accidental lowering before working on the boom.

1. Raise the boom slightly higher than the pinning position.
2. Secure the boom with the locking pin (1).

This is only intended for brief periods of work under the sprayer boom.

(1) Locking pin secures the boom

(2) Locking pin in parking position

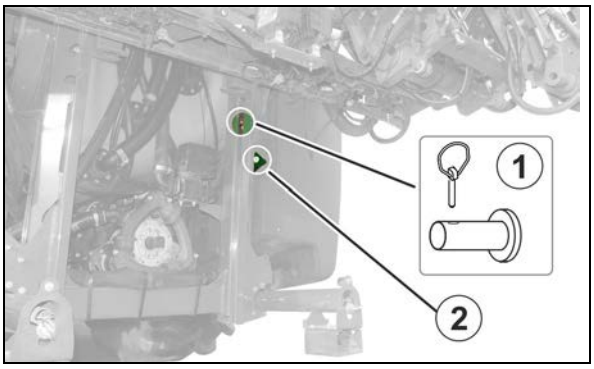

13.5 Maintenance schedule – overview

- Carry out maintenance work when the first interval is reached.
- The times, continuous services or maintenance intervals of any third party documentation shall have priority.

On a daily basis

Component	Maintenance work	see page	Specialist workshop
Pumps	• Check the oil level • Clean and/or flush	**178**	
Fluid filter (Profi-folding only)	• Condition check	**173**	
Spray liquid tank	• Clean and/or flush	**164**	
Line filter in the nozzle lines (if present)		**164**	
Valve chest		**164**	
Spraying nozzle		**164**	
Hydraulic hose lines	• Check for defects • Check for leak tightness	170	**X**

Every three months / 200 operating hours

Component	Maintenance work	see page	Specialist workshop
Line filter	• Clean • Replace damaged filter inserts	**164 / 96**	
Booms	• Check the boom sections for cracks or initial crack formation		

Annually / 1,000 operating hours

Component	Maintenance work	see page	Specialist workshop
Pumps	• Oil change every 500 operating hours • Check valves and, if necessary, replace • Check the piston diaphragm and, if necessary replace	**178** **179** **179**	**X**
Fluid filter	• Replace	**173**	**X**
Flow meter and return flow meter	• Calibrate the flow meter • Align the return flow meter	**187**	
Nozzles	• Calibrate the field sprayer and check the lateral distribution; if necessary, replace worn nozzles	**179**	

As necessary

Component	Maintenance work	see page	Specialist workshop
Super-S boom	• Correct the settings	**175**	
Upper and lower link pins	• Check for defects and, if necessary, replace worn pins	**187**	
Solenoid valves	• Cleaning	**173**	
Hydraulic throttle valve	• Adjusting the actuation speed	**175**	
Hydraulic plug	• Rinse / exchange the filter in the hydraulic plug	**174**	

13.6 Hydraulic system

WARNING

Risk of infection through the high pressure hydraulic fluid of the hydraulic system entering the body.

- Only a specialist workshop may carry out work on the hydraulic system.
- Depressurise the hydraulic system before carrying out work on the hydraulic system.
- When searching for leak points, always use suitable aids.
- Never attempt to plug leaks in hydraulic hose lines using your hand or fingers.

  Escaping high pressure fluid (hydraulic fluid) may pass through the skin and ingress into the body, causing serious injuries.

  If you are injured by hydraulic fluid, contact a doctor immediately. Risk of infection

- When connecting the hydraulic hose lines to the tractor hydraulic system, ensure that the hydraulic system is depressurised on both the tractor and the trailer.
- Ensure that the hydraulic hose lines are connected correctly.
- Regularly check all the hydraulic hose lines and couplings for damage and soiling.
- Have the hydraulic hose line checked at least once a year by a specialist for proper functioning.
- Replace the hydraulic hose line if it is damaged or worn. Only use genuine AMAZONE hydraulic hose lines.
- The hydraulic hose lines should not be used for longer than six years, including any storage time of maximum two years. Even with proper storage and approved use, hoses and hose connections are subject to natural ageing, thus limiting the length of use. However, it may be possible to specify the length of use from experience values, in particular when taking the risk potential into account. In the case of hoses and hose connections made from thermoplastics, other guide values may be decisive.
- Dispose of old oil in the correct way. If you have problems with disposal, contact your oil supplier.
- Keep hydraulic fluid out of the reach of children!
- Ensure that no hydraulic fluid enters the soil or waterways.

13.6.1 Labelling of hydraulic hose lines

Valve chest identification provides the following information:

(1) Manufacturer's mark on the hydraulic hose lines (A1HF)

(2) Date of manufacture of the hydraulic hose lines (02 04 = February 2004)

(3) Maximum approved operating pressure (210 BAR).

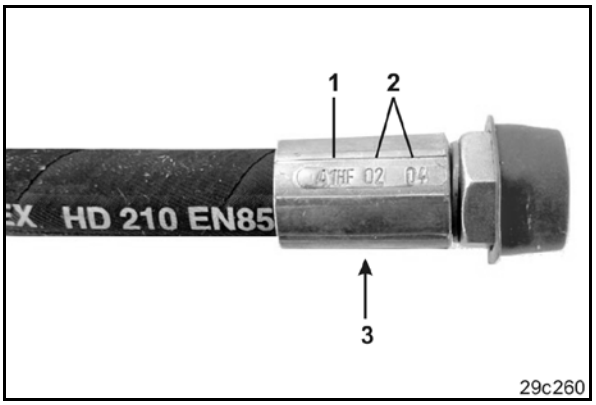

13.6.2 Maintenance intervals

After the first 10 operating hours, and then every 50 operating hours

1. Check all the components of the hydraulic system for tightness.
2. If necessary, tighten screw unions.

Before each start-up:

1. Check hydraulic hose lines for visible damage.
2. Eliminate any scouring points on hydraulic hose lines and pipes.
3. Immediately replace worn or damaged hydraulic hose lines.

13.6.3 Inspection criteria for hydraulic hose lines

For your own safety and in order to reduce pollution, ensure the following inspection criteria.

Replace hoses if the respective hose fulfils at least one of the following criteria:

- Damage to the outer layer up to the ply (e.g. scouring points, cuts, cracks).
- Brittleness of the outer layer (crack formation of the hose material).
- Deformations which do not match the natural shape of the hose. Both in a depressurised and pressurised state or when bent (e.g. layer separation, bubble formation, pinching, bends).
- Leak points.
- Installation requirements not complied with.
- Life span of 6 years has been exceeded.

  The date of manufacture of the hydraulic hose line on the assembly is decisive for determining these six years. If the date of manufacture on the assembly is "2004", then the hose should not be used beyond February 2010. See also "Labelling of hydraulic hose lines".

Common causes for leaking hoses / pipes and connection pieces include:

- missing O-rings or seals
- damaged or badly fitting O-rings
- brittle or deformed O-rings or seals
- foreign bodies
- badly fitting hose clips

13.6.4 Installing and removing hydraulic hose lines

Use

- only genuine AMAZONE replacement hoses. These hoses stand up to chemical, mechanical and thermal loads.
- hose clips made from V2A for fitting hoses, as a rule.

When installing and removing hydraulic hose lines, always observe the following information:

- Ensure cleanliness. • Always install the hydraulic hose lines to ensure the following in all operating positions
  - o There is no tension, apart from the hose's own weight.
  - o There is no possibility of jolting on short lengths.
  - o External mechanical influences on the hydraulic hose lines are avoided.

    Use appropriate arrangements and fixing to prevent any scouring of the hoses on components or on each other. If necessary, secure hydraulic hose lines using protective covers. Cover sharp-edged components.
  - o The approved bending radii may not be exceeded.

- When connecting a hydraulic hose line to moving parts, the hose length must be appropriate so that the smallest approved bending radius is not undershot over the whole area of movement and/or the hydraulic hose line is not overtensioned.
- Fix the hydraulic hose lines at the specified fixing points. There, avoid hose clips, which impair the natural movement and length changes of the hose.
- The coating of hydraulic hose lines is not permitted.

13.6.5 Fluid filter

- Profi-folding only:

Hydraulic fluid filter (1) with contamination indicator (2).

- Green Filter fully functional
- Red Replace filter

To remove the filter, twist off the filter cover and remove the filter.

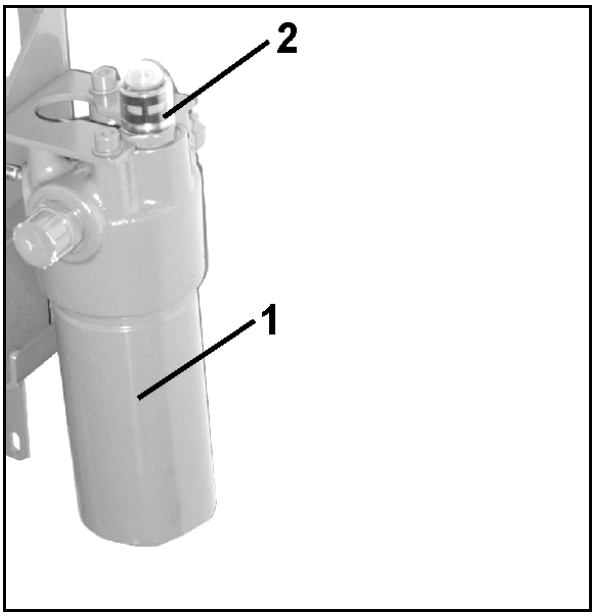

WARNING

Beforehand, depressurise the hydraulic system.

Otherwise there is a risk of injury from hydraulic fluid escaping at high pressure.

After replacing the filter, press the contamination indicator back into place.

→ **Green ring again visible.**

13.6.6 Cleaning the solenoid valves

- hydraulic block for Profi-folding

To eliminate impurities from the solenoid valves, they must be flushed through. This may be necessary if deposit prevent the slider fully opening or closing.

1. Unscrew the magnetic cap (1) abschrauben.
2. Remove the solenoid (2) abnehmen.
3. Unscrew the valve rod (3) with valve seats and clean with compressed air or hydraulic fluid

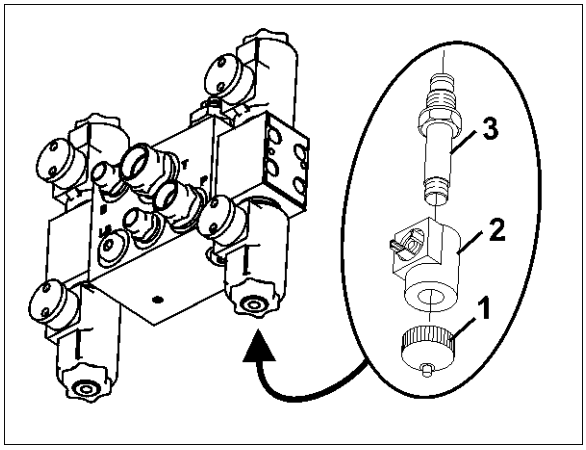

CAUTION

Beforehand, depressurise the hydraulic system.

Otherwise there is a risk of injury from hydraulic fluid escaping at high pressure.

13.6.7 Clean / exchange the filter in the hydraulic plug

Not with Profi-folding.

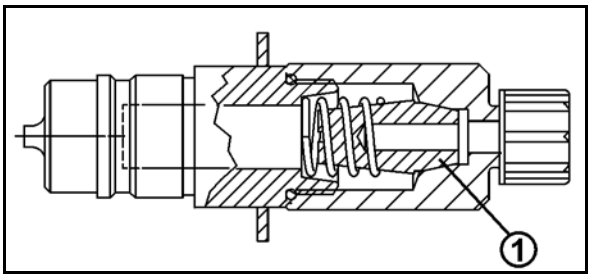

The hydraulic plugs are equipped with a filter (1) that may block and then have to be cleaned / exchanged.

This is the case when the hydraulic functions run slower.

1. Unscrew the hydraulic plug from the filter housing.
2. Remove the filter with compression spring.
3. Clean / exchange the filter.
4. Re-fit the filter and compression spring correctly.
5. Screw back on the hydraulic plug. In doing so, observe the correct seating of the O-ring seal.

CAUTION

Danger of injuries from escaping hydraulic oil at high pressure!

Work on the hydraulic system only in a depressurized state.

13.7 Adjusting the hydraulic throttle valve

The operating speeds of the individual hydraulic functions are set in the factory.

However, depending on the type of tractor, it may be necessary to correct these speed settings.

The operating speed for a hydraulic function can be adjusted by screwing the hexagon socket head screw on the corresponding throttle in or out.

- Reduce operating speed = screw in hexagon socket head screw.
- Increase operating speed = screw out hexagon socket head screw.

Always adjust the two throttles in a throttle pair equally when correcting the operating speed of a hydraulic function.

13.7.1 Super-S boom

Folding via the tractor control unit

(1) Hydraulic throttle valve - height adjustment.

(2) Hydraulic throttle valve - fold down the left-hand boom.

(3) Hydraulic throttle valve - fold down the right-hand boom.

(4) Hydraulic throttle valve - lock and unlock the swing compensation.

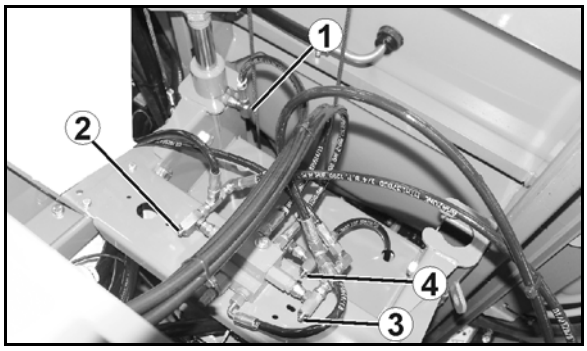

(5) Hydraulic throttle valve - fold out the boom.

(6) Hydraulic throttle valve - fold in the boom.

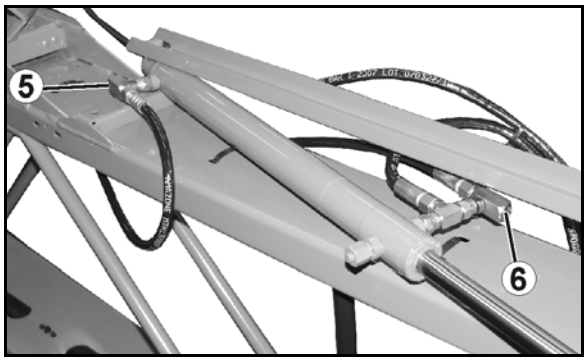

Profi-folding I

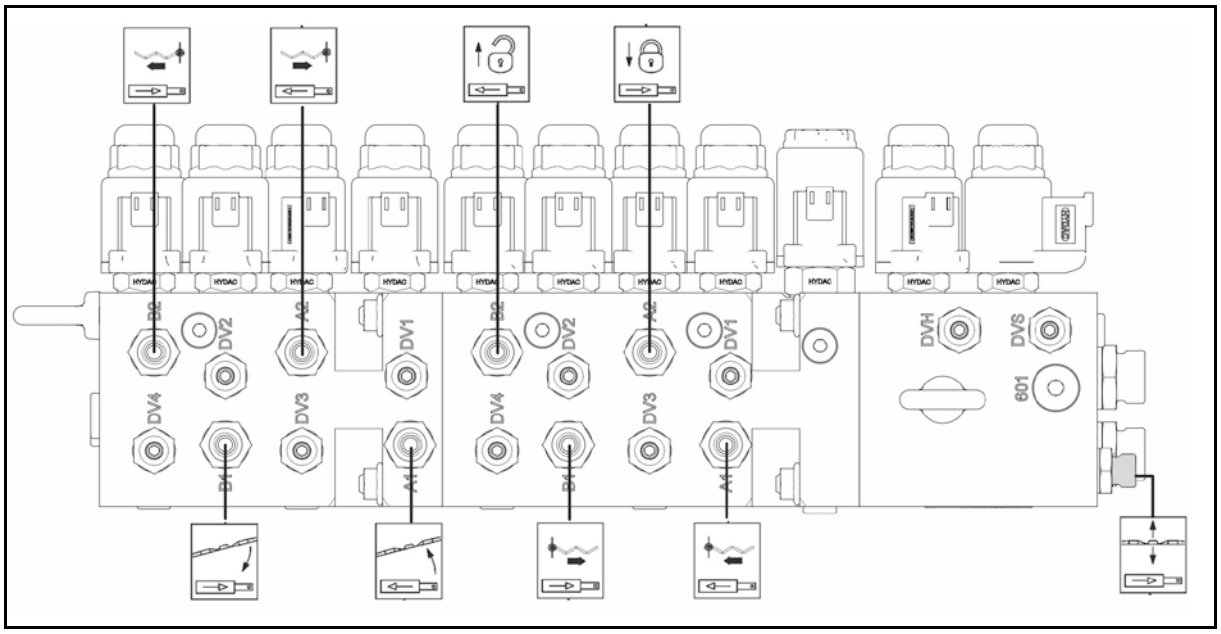

Unfold / fold in left

Unfold / fold in right

Lock vibration compensation /

Unlock vibration compensation

Tilt left / Tilt right

Lift / lower boom

Angle up / angle down left

Angle up / angle down right

Profi-Klappung II

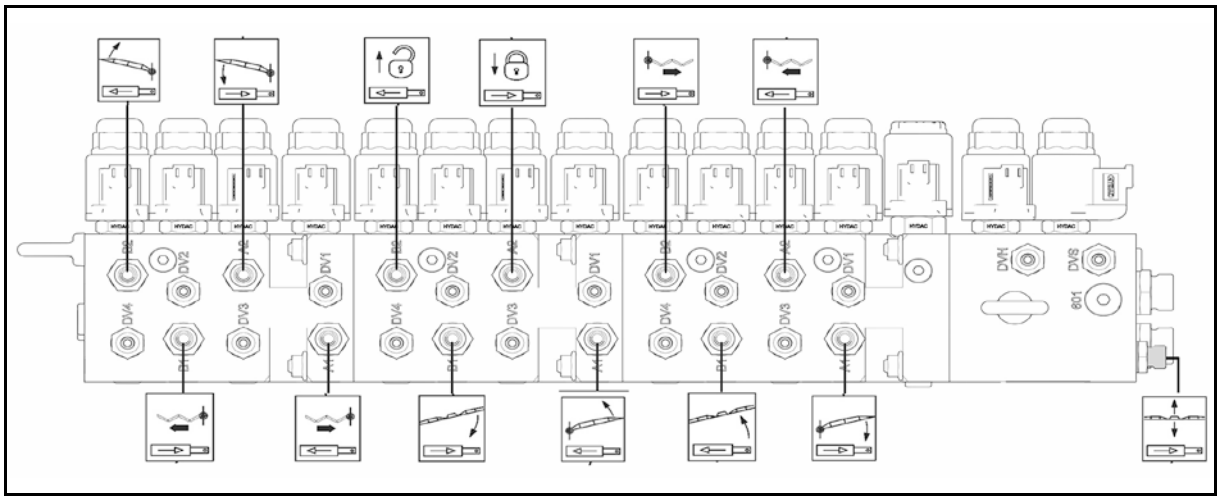

13.8 Adjustments on the folded-out sprayer boom

Alignment parallel to the ground

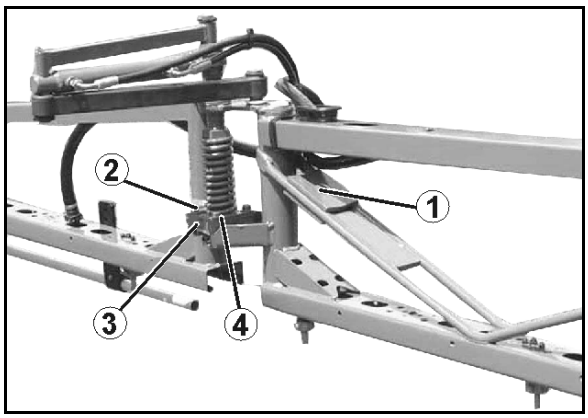

With the sprayer boom folded out and correctly set, all the spraying nozzles must be of the same parallel distance to the ground.

If this is not the case, with the swing compensation **unlocked** align the folded-out sprayer boom by means of counterweights (1). Secure the counterweights to the boom extension accordingly.

Horizontal alignment

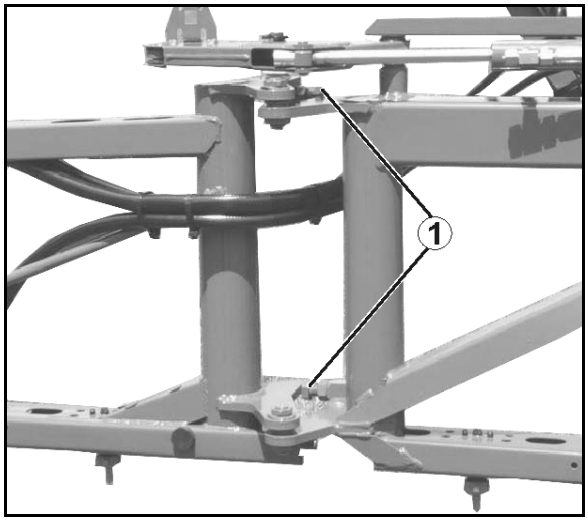

Viewed in the direction of travel, all boom sections of the sprayer boom must be flush in line. Horizontal alignment may be necessary

- after a long period of use
- or in the event of rough contact between the ground and the sprayer boom.

Inner boom section

1. Release the lock nut of the adjusting screw (1).
2. Turn the adjusting screw against the stops until the inner boom is flush with the sprayer boom middle section.
3. Tighten the lock nut.

Outer boom section

1. Release the screws (2) of the securing link (3). The boom is aligned directly at the plastic catch (4) through the slotted holes of the securing link.
2. Align the boom section.
3. Tighten the screws (2).

13.9 Pump

13.9.1 Checking the oil level

- Only use 20W30 branded oil or 15W40 multi purpose oil.
- Ensure the correct oil level. Damage may be caused both by the oil level being too low or too high.
- Foam generation and cloudy oil are signs of a faulty pump membrane.

1. Check whether the oil level is visible at the mark with the pump not running and standing on a flat surface.
2. If the oil level is not visible at the mark, remove the lid and top up with oil.

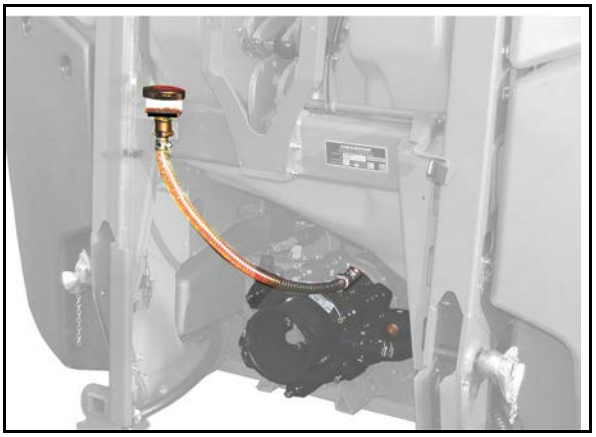

13.9.2 Changing the oil

- Change the oil every 400 to 450 operating hours, or at least once every year.
- After a few operating hours, check the oil level; top up if necessary.

1. Remove the pump.
2. Remove the lid.
3. Drain the oil.
   - 3.1 Turn the pump on its head.
   - 3.2 Rotate the drive shaft by hand until the used oil has all run out.
     The option also exists to drain the oil from the drain plug. However, with this procedure a slight oil residue remains in the pump; we therefore recommend the first approach.
4. Place the pump on an even surface.
5. Turn the drive shaft left and right alternately and slowly fill with new oil. The right quantity of oil has been reached when the oil is visible at the mark.

After each use, thoroughly clean the pump by pumping clear fresh water for several minutes.

13.9.3 Checking and replacing the suction and pressure-side valves

- Pay attention to the respective installation positions of the valves on the suction and pressure sides before removing the valve groups (5).
- When reassembling, ensure that the valve guide (9) is not damaged. Damage may cause the valves to jam.
- Always tighten the screws (1) in a crosswise fashion using the specified torque. Improper tightening of the screws causes warping, which results in leaks.

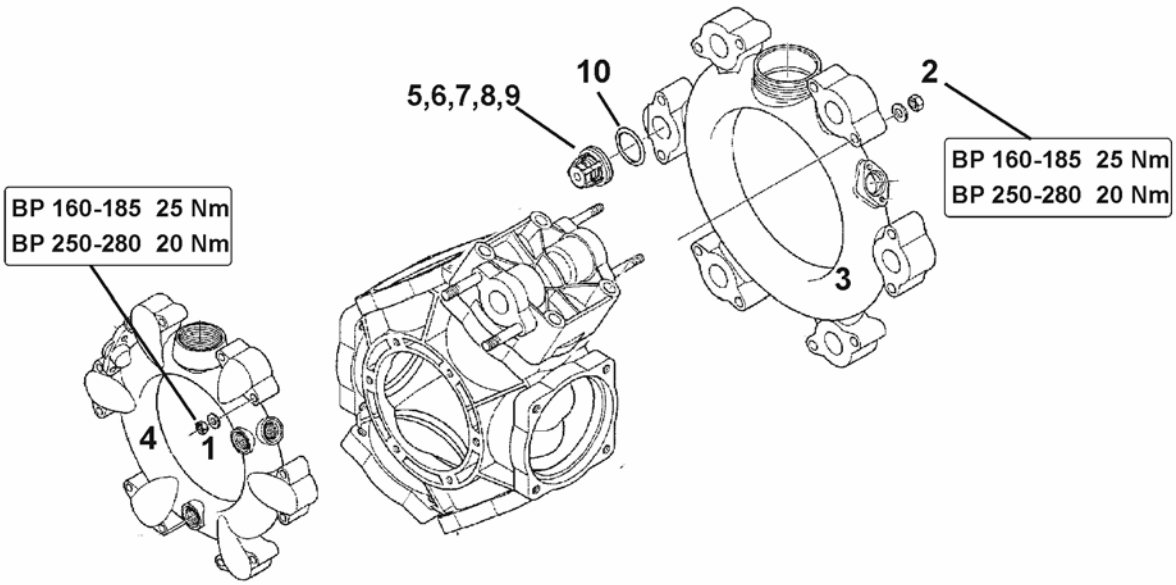

1. If necessary, remove the pump.
2. Remove the nuts (1,2).
3. Remove the suction and pressure port (3 and 4).
4. Remove the valve groups (5).
5. Check the valve seat (6), valve (7), valve spring (/8) and valve guide (9) for wear or damage.
6. Remove the O-ring (10).
7. Replace defective parts.
8. After testing and cleaning, fit the valve groups (5).
9. Insert new O-rings (10).
10. Mount the suction (3) and pressure port (4) on the pump housing.
11. Tighten the nuts (1,2) in a crosswise fashion using a torque of **25 Nm (BP 160-185) / 20 Nm (AR 250-280)**.

13.9.4 Checking and replacing piston diaphragms (workshop work)

- At least once a year, check that the piston diaphragm (8) is in perfect condition by removing it.
- Pay attention to the respective installation positions of the valves on the suction and pressure sides before removing the valve groups (5).
- Check and replace the piston diaphragm for each piston individually. Only remove the next piston in sequence after the currently removed piston has been completely checked and refitted.
- Always swivel the piston to be checked upwards so that the oil in the pump housing does not run out.
- As a rule, replace all piston diaphragms (8), even if only one piston diaphragm distorted, punctured or porous.

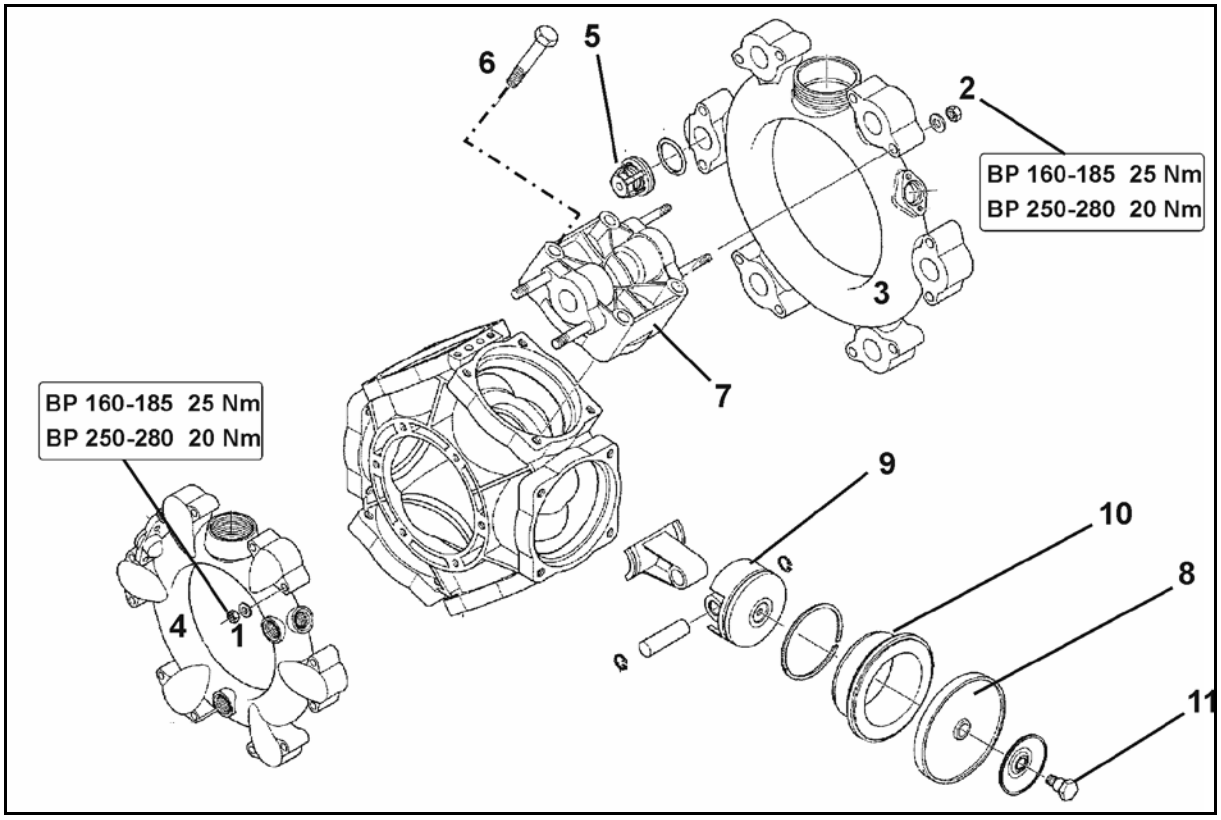

Checking the piston diaphragm

1. If necessary, remove the pump.
2. Remove nuts (1, 2).
3. Remove the suction and pressure port (3 and 4).
4. Remove the valve groups (5).
5. Remove the nuts (6).
6. Remove the cylinder head gasket (7).
7. Check the piston diaphragm (8).
8. Replace the damaged piston diaphragm.

Replacing the piston diaphragm

- Ensure the correct position for the recesses and/or holes on the hydraulic cylinders.
- Secure the piston diaphragm (8) with a washer disc and a screw (11) on the piston (9), so that the rim shows on the cylinder head side (7).
- Always tighten the nuts (1,2) in a crosswise fashion using the specified torque. Improper tightening of the screws causes warping, which results in leaks.

1. Undo the screw (/11) and remove the piston diaphragm (8) and the washer disc from the piston (9).
2. If the piston diaphragm has been punctured, drain the oil/spray liquid mixture from the pump housing.
3. Remove the hydraulic cylinder (10) from the pump housing.
4. Clean the pump housing by flushing it thoroughly with diesel oil or paraffin.
5. Clean all sealing faces.
6. Insert the cylinder (10) back into the pump housing.
7. Fit the piston diaphragm (8).
8. Mount the cylinder head (7) on the pump housing and tighten the screws (6) an equal amount in a crosswise fashion.

   Use adhesive for medium tight screw connections for the screw connection!
9. After testing and cleaning, fit the valve groups (/5).
10. Insert new O-rings.
11. Mount the suction (3) and pressure port (4) on the pump housing.
12. Tighten the nuts (1,2) in a crosswise fashion using a torque of **25 Nm (BP 160-185) / 20 Nm (AR 250-280)**.

13.10 Metering the field sprayer

Test the field sprayer by metering

- **before the start of the season.**
- **each time the nozzles are changed.**
- **to check the setting information in the spray tables.**
- **in the case of deviations between the actual and required application rate [l/ha].**

Observed deviations between the actual and required application rate [l/ha] can be caused by:

- the difference between the actual forward speed and that indicated on the tractor meter and/or
- natural wear to the spraying nozzles.

Accessories required for metering:

(1) Quick-check cup

(2) Stopwatch

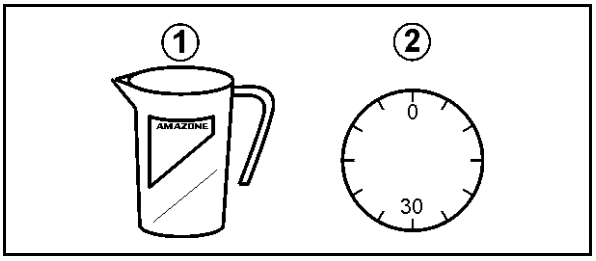

Determining the actual application rate while stationary via the individual nozzle output

Determine the nozzle output on at least 3 different nozzles. To do so, check one nozzle on the left and right boom section respectively, and one in the middle of the sprayer boom, as follows.

1. Control terminal:

   1.1 Enter the value for the required application rate on the control terminal.

   1.4 Enter simulated speed.
2. Fill the spray liquid tank with water (approx. 1000 l).
3. Switch on the agitator.
4. Switch on the sprayer and check that all of the nozzles work properly.
5. Determine the individual nozzle output [l/min] on several nozzles.

   To do so, hold the quick-check cup for exactly 30 seconds under a nozzle.
6. Switch off spraying.
7. Determine the average individual nozzle output [l/ha].

- Using the table on the quick-check cup.
- By calculation.
- Using the spray table.

Example:

Noz. size	'06'
Intended forward speed	7 km/h
Nozzle output on the left boom section:	0.85 l/30s
Nozzle output in the middle	0.84 l/30s
Nozzle output on the right boom section:	0.86 l/30s
Calculated average value:	**0.85 l/30s → 1.7 l/min**

1. Determining the individual nozzle output [l/ha] with the quick-check cup

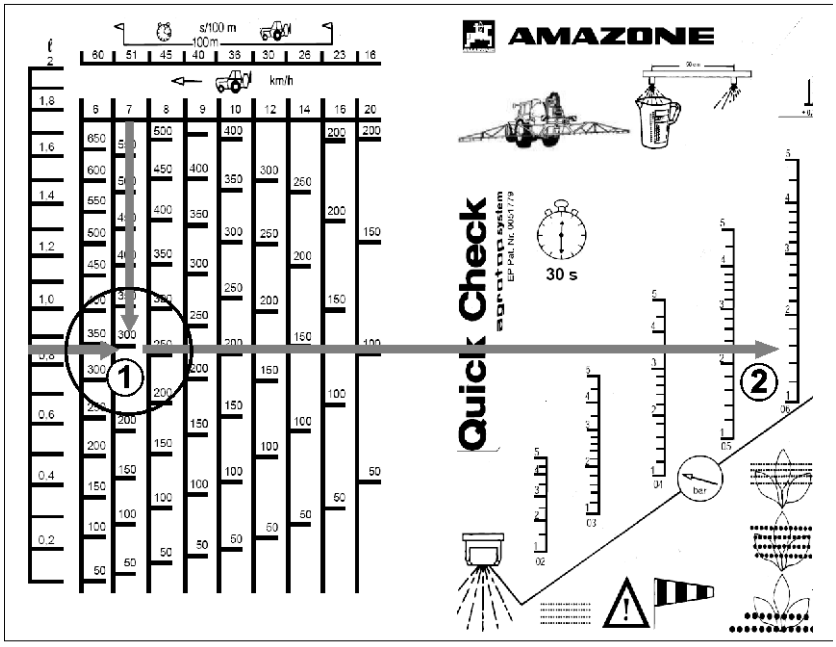

(1) →Determined application rate 290 l/ha
(2) →Determined spray pressure 1.6 bar

2. Calculating the individual nozzle output [l/ha]

$$\frac{d\ [l/min]\ \times\ 1200}{e\ [km/h]} = \text{Application rate } [l/ha]$$

- d: Nozzle output (calculated average value) [l/min]
- e: Forward speed [km/h]

$$\frac{1.7\ [l/min]\ \times\ 1200}{7\ [km/h]} = 291\ [l/ha]$$

3. Reading the individual nozzle output [l/ha] from the spray table

From the spray table (see page 192):

→ Application rate 291 l/ha
→ Spray pressure 1.6 bar

If the determined values for the application rate and application pressure do not match the set values:

- Calibrate the flow meter (see ISOBUS software operating manual).
- Check all nozzles for wear and blockages.

13.11 Nozzles

Fitting the nozzle

Different nozzle sizes are marked with bayonet nuts of different colours.

1. Insert the nozzle filter (5) into the nozzle body from below.

The nozzle is located in the bayonet nut

2. Press a rubber seal (6) above the nozzle into the seat for the bayonet nut.
3. Turn the bayonet nut on the bayonet connection up to the stop.

Removing the diaphragm valve if the nozzle is dripping

Deposits on the diaphragm seat in the nozzle body cause dripping after the nozzle has been switched off.

1. Remove the spring element (3).
2. Take out the diaphragm (2).
3. Clean the diaphragm seat.
4. Check the diaphragm for cracks.
5. Reinstall the diaphragm and spring element.

Checking the nozzle shutter

From time to time, check the seating of the shutter (4).

To do this, insert the shutter into the nozzle body as far as possible using moderate thumb pressure.

Do not insert the shutter up to the stop when in a new condition under any circumstances.

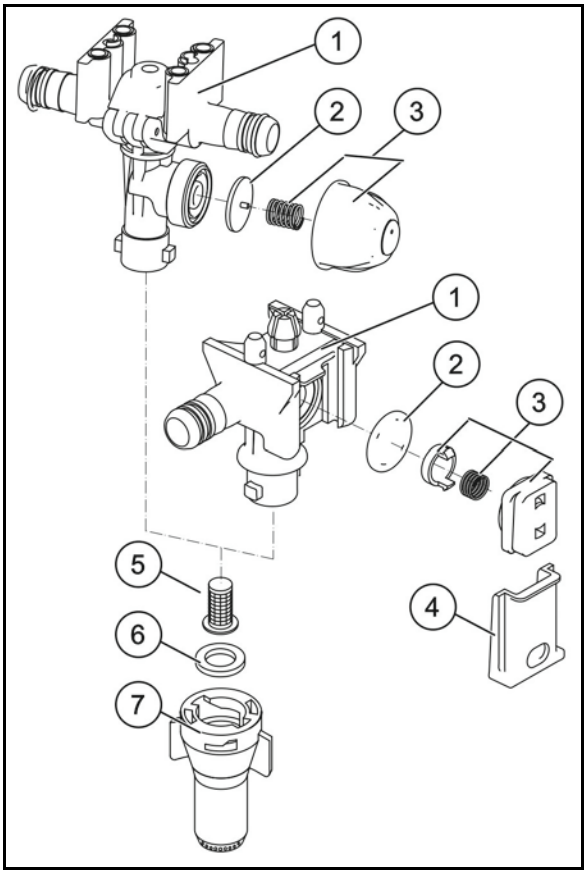

13.12 Line filter

- Clean the line filters
  (1) 3 - 4 months depending on operating conditions).
- Change damaged filter inserts.

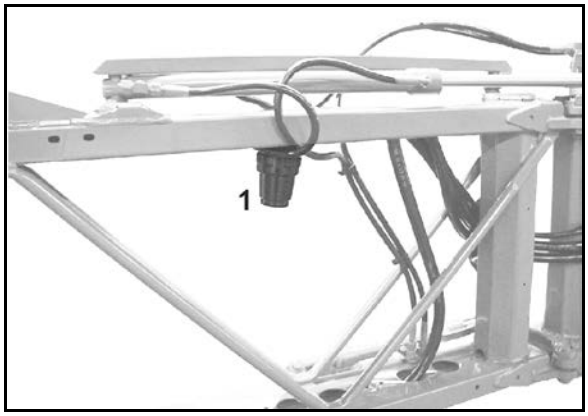

13.13 Instructions on testing the field sprayer

- Only authorised centres are permitted to carry out spray tests.
- According to law, a spray test must be carried out:
  - 6 months after commissioning (if not performed at time of purchase) at the latest, then
  - every two years thereafter.

Field sprayer test kit (optional), order no.: 930 420

(1) Hose connection (order no.: GE 112)

(2) Push-on cap (order no.: 913 954) and connector (order no.: ZF 195)

(3) Flow meter connection

(4) Pressure gauge connection

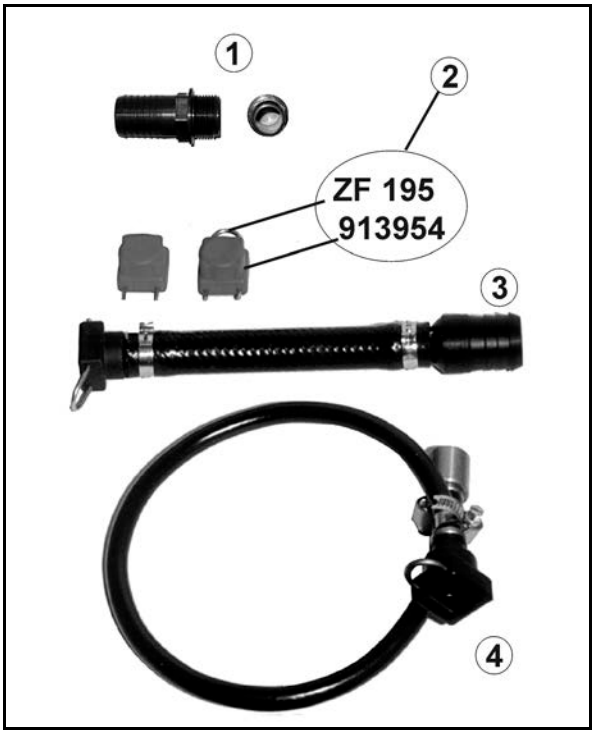

Pump test - testing pump performance (delivery capacity, pressure)

1. Undo the sleeve nut (1).
2. Attach the hose connection (GE112) with the test instrument (flow meter) connected.
3. Tighten the sleeve nut.
4. Check pump performance.
5. Follow steps 1-4 in reverse sequence.

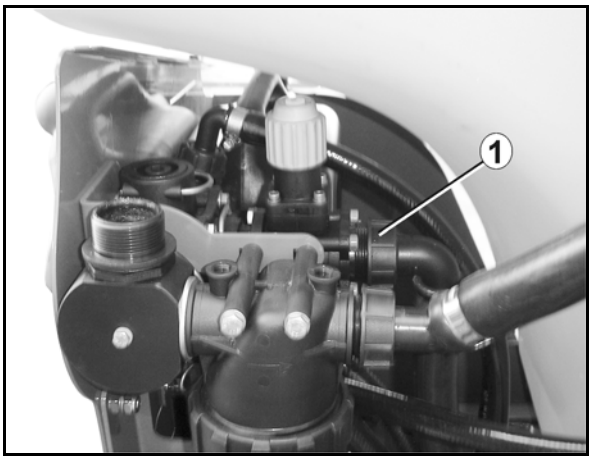

Flow meter test

1. Remove all spray lines from the part width section valves (1).
2. Connect the flow meter connection (3) to a part width section valve and connect to the tester.
3. Block the connections for the remaining part width section valves using blanks (2).
4. Switch on the sprayer boom.

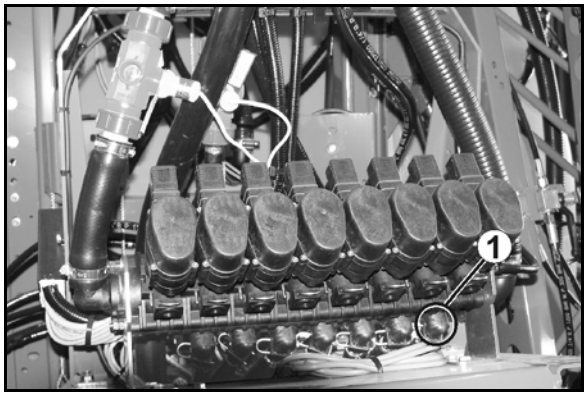

Pressure gauge test

1. Remove a spray line from a part width section valve (1).
2. Connect the pressure gauge connection (4) to the part width section valve with the help of the turned socket.
3. Screw the check gauge 1/4 of an inch into the inside thread.

13.14 Upper and lower link pins

WARNING

Risk of crushing, catching, trapping or impact when the machine unexpectedly releases from the tractor.

Check the upper and lower link pins for visible damage each time you couple the machine. Replace the upper and lower link pins in the event of clearly visible wear.

13.15 Screw tightening torques

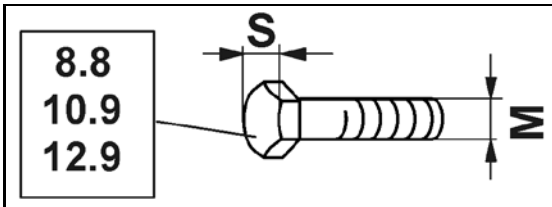

M	S	Nm 8.8	Nm 10.9	Nm 12.9
M 8	13	25	35	41
M 8x1		27	38	41
M 10	16 (17)	49	69	83
M 10x1		52	73	88
M 12	18 (19)	86	120	145
M 12x1,5		90	125	150
M 14	22	135	190	230
M 14x1,5		150	210	250
M 16	24	210	300	355
M 16x1,5		225	315	380
M 18	27	290	405	485
M 18x1,5		325	460	550
M 20	30	410	580	690
M 20x1,5		460	640	770
M 22	32	550	780	930
M 22x1,5		610	860	1050
M 24	36	710	1000	1200
M 24x2		780	1100	1300
M 27	41	1050	1500	1800
M 27x2		1150	1600	1950
M 30	46	1450	2000	2400
M 30x2		1600	2250	2700

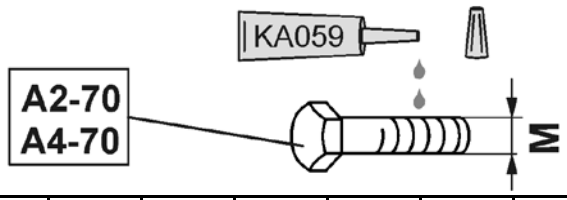

M	M4	M5	M6	M8	M10	M12	M14	M16	M18	M20	M22	M24
Nm	2,4	4,9	8,4	20,6	40,7	70,5	112	174	242	342	470	589

Coated bolts have different tightening torques.

Observe the specific data for tightening torques in the maintenance section.

13.16 Disposing of the field sprayer

Carefully clean the whole field sprayer (inside and out) before disposing of the field sprayer.

The following components are eligible for energy recovery*: spray liquid tank, induction bowl, flushing water tank, fresh water tank, hoses and plastic fittings.

Metal parts can be scrapped.

Follow the statutory requirements for each individual material.

* Energy recovery

is the process of reclaiming the energy contained in plastics by burning them and using the energy released to generate electricity and/or steam or to supply process heat. Energy recovery is suitable for mixed and contaminated plastics, in particular for any plastics which have come into contact with pollutants.

14 Liquid circuit

Single nozzle control

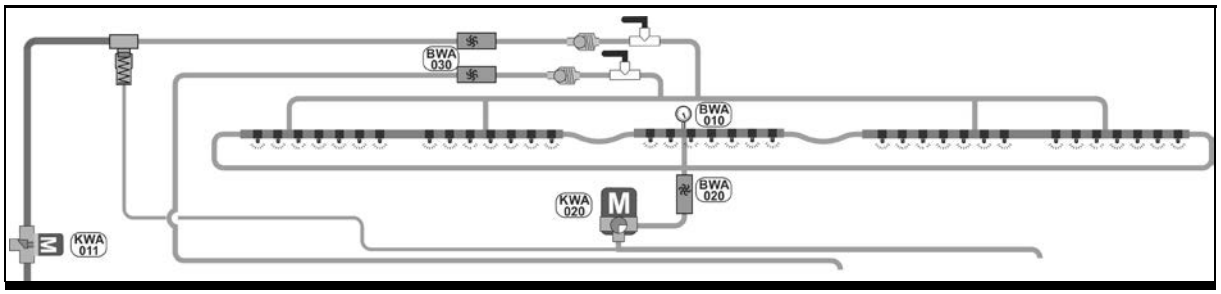

Part-width section control

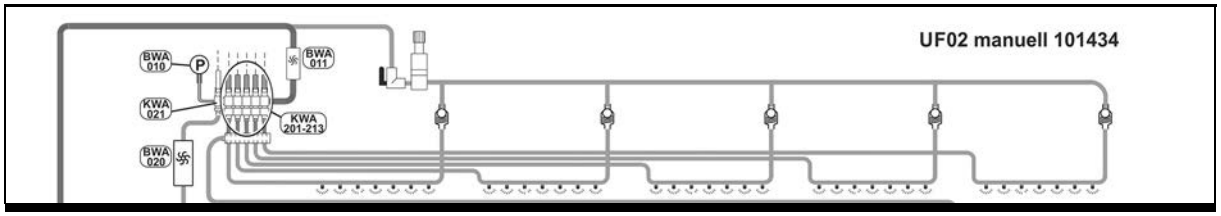

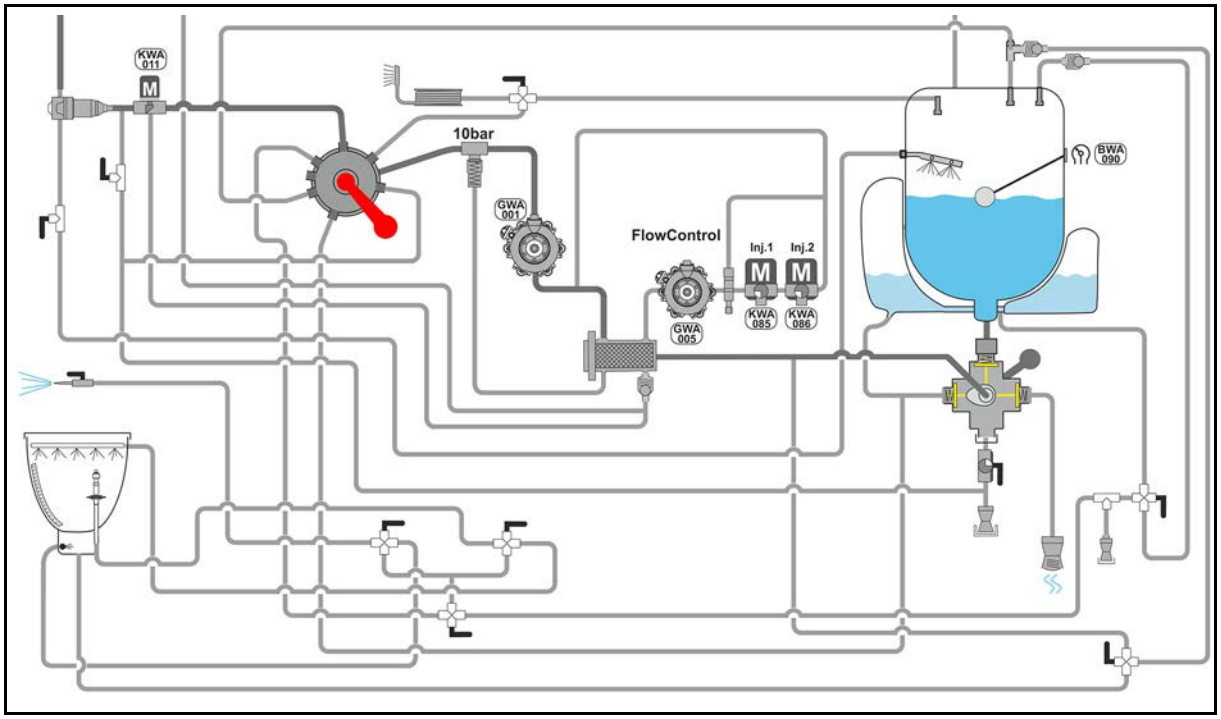

BWA010	Spray line pressure	KWA011	Application rate control valve
BWA011	Spray line flow sensor	KWA020	Return flow quantity control valve
BWA020	Return flow sensor	KWA021	Bypass valve
BWA030	High-Flow flow sensor	KWA085	Front tank to front valve
BWA090	Spray liquid tank fill level	KWA086	Front tank to rear valve
		KWA 201-213	Part-width section valve 1-13
GWA001	Spray liquid pump		
GWA005	Pumps		

15 Spray table

15.1 Spray tables for flat-fan, anti-drift, injector and airmix nozzles, spraying height 50 cm

- The spray rates [l/ha] listed in the spray tables are only valid for water. To convert the spray rates given into AUS, multiply these by 0.88 and, for NP solutions, by 0.85.
- The illustration helps with the selection of the right nozzle type. The nozzle type is determined by
  - the intended operational speed,
  - the required spray rate and
  - the required atomisation characteristic (fine, medium or coarse-dropped) of the crop protection agent used for the crop protection measure.
- The illustration is used to
  - determine the nozzle size.
  - determine the required spray pressure.
  - determine the required individual nozzle output for calibrating the field sprayer.

Permissible pressure ranges for different nozzle types and sizes

Nozzle type		Nozzle size	Permissible pressure range [bar]	
			min. pressure	max. pressure
XRC		TeeJet	1	5
AD		Lechler	1,5	5
Air Mix		agrotop	1	6
Air Mix OC			2	4
IDK / IDKN		Lechler	1	6
ID3	**0,1-0,15**		3	8
ID3	**0,2-0,8**		2	8
AI		TeeJet	2	8
TTI			1	7
AVI Twin		agrotop	2	8
TD Hi Speed		agrotop	2	10

For further information about the nozzle characteristics, see the nozzle manufacturer's website.
www.agrotop.com / www.lechler-agri.de / www.teejet.com

Selecting the nozzle type

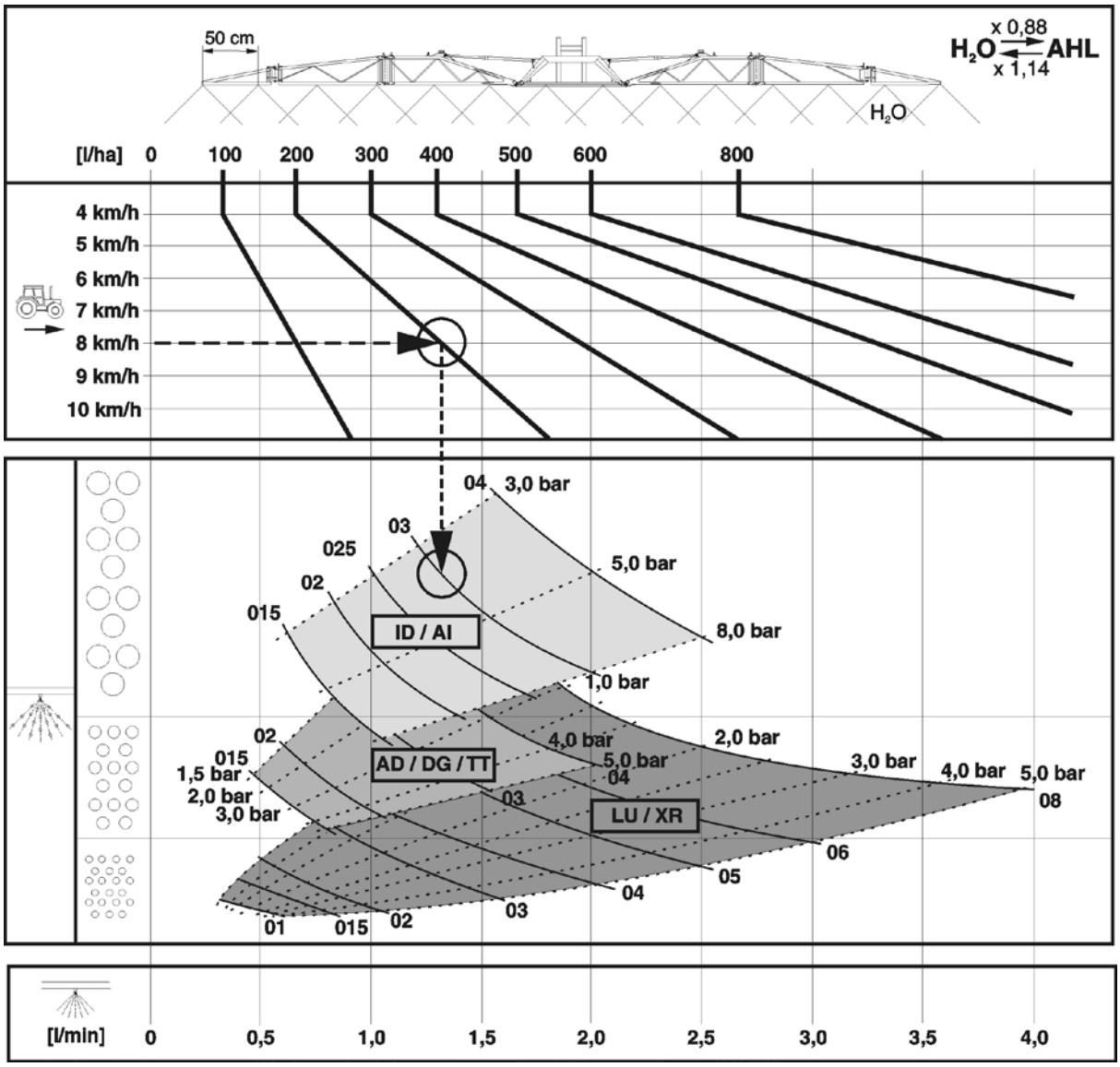

Example:

Required spray rate:	**200 l/ha**
Intended operational speed:	**8 km/h**
Required atomisation characteristic for the crop protection measure:	**coarse-dropped** (low drifting)
Required nozzle type:	?
Required nozzle size:	?
Required spray pressure:	? bar
Required individual nozzle output for calibrating the field sprayer:	? l/min

Determining the nozzle type, nozzle size, spray pressure and individual nozzle output

1. Determine the working point for the required spray rate (**200 l/ha**) and the intended operational speed (**8 km/h**).
2. At the working point, trace a line down the table. Depending on the position of the working point, this line will run through the cells for various nozzle types.
3. Select the best nozzle type for the crop protection measure in question, with reference to the required atomisation characteristic (fine, medium or coarse-dropped).

   Nozzle choice for the example given above:

   Nozzle type: **AI or ID**
4. Go to the spray table.
5. In the column with the intended operational speed (**8 km/h**), find the required spray rate (**200 l/ha**) or a figure which is as close as possible to the required spray rate (in this case, for example, **195 l/ha**).
6. In the line with the required spray rate (**195 l/ha**),
   - read the nozzle sizes in question. Select a suitable nozzle size (e.g.**'03'**).
   - where the nozzle size column intersects with the selected nozzle size, read the required spray pressure (e.g. **3.7 bar**).
   - read the required individual nozzle output (**1.3 l/min**) for calibrating the field sprayer.

Required nozzle type:	**AI / ID**
Required nozzle size:	**'03'**
Required spray pressure:	**3.7 bar**
Required individual nozzle output for calibrating the field sprayer:	**1.3 l/min**

H_2O l/ha												l/min	bar							
6	6,5	7	7,5	8	8,5	9	10	11	12	14	16		015	02	025	03	04	05	06	08
← km/h																				
80	74	69	64	60	56	53						0,4	1,4							
100	92	86	80	75	71	67	60	55				0,5	2,2	1,2						
120	111	103	96	90	85	80	72	65	60	51		0,6	3,1	1,8	1,1					
140	129	120	112	105	99	93	84	76	70	60	53	0,7	4,2	2,4	1,5	1,1				
160	148	137	128	120	113	107	96	87	80	69	60	0,8	5,5	3,1	2,0	1,4				
180	166	154	144	135	127	120	108	98	90	77	68	0,9	7,0	4,0	2,5	1,8	1,0			
200	185	171	160	150	141	133	120	109	100	86	75	1,0		4,9	3,1	2,2	1,2			
220	203	189	176	165	155	147	132	120	110	94	83	1,1		5,9	3,7	2,7	1,5	1,0		
240	222	206	192	180	169	160	144	131	120	103	90	1,2		7,0	4,4	3,2	1,8	1,1		
260	240	223	208	195	184	173	156	142	130	111	98	1,3			5,2	3,7	2,1	1,3	1,0	
280	259	240	224	210	198	187	168	153	140	120	105	1,4			6,0	4,3	2,4	1,6	1,1	
300	277	257	240	225	212	200	180	164	150	129	113	1,5			6,9	5,0	2,8	1,8	1,2	
320	295	274	256	240	226	213	192	175	160	137	120	1,6				5,7	3,2	2,0	1,4	
340	314	291	272	255	240	227	204	185	170	146	128	1,7				6,4	3,6	2,3	1,6	
360	332	309	288	270	254	240	216	196	180	154	135	1,8				7,2	4,0	2,6	1,8	1,0
380	351	326	304	285	268	253	228	207	190	163	143	1,9					4,5	2,9	2,0	1,1
400	369	343	320	300	282	267	240	218	200	171	150	2,0					4,9	3,2	2,2	1,2
420	388	360	336	315	297	280	252	229	210	180	158	2,1					5,4	3,5	2,4	1,4
440	406	377	352	330	311	293	264	240	220	189	165	2,2					6,0	3,8	2,7	1,5
460	425	394	368	345	325	307	276	251	230	197	173	2,3					6,5	4,2	2,9	1,6
480	443	411	384	360	339	320	288	262	240	206	180	2,4					7,1	4,6	3,2	1,8
500	462	429	400	375	353	333	300	273	250	214	188	2,5						5,0	3,4	1,9
520	480	446	416	390	367	347	312	284	260	223	195	2,6						5,4	3,7	2,1
540	499	463	432	405	381	360	324	295	270	231	203	2,7						5,8	4,0	2,3
560	517	480	448	420	395	373	336	305	280	240	210	2,8						6,2	4,3	2,4
580	535	497	464	435	409	387	348	316	290	249	218	2,9						6,7	4,6	2,6
600	554	514	480	450	424	400	360	327	300	257	225	3,0						7,1	5,0	2,8
620	572	531	496	465	438	413	372	338	310	266	233	3,1								3,0
640	591	549	512	480	452	427	384	349	320	274	240	3,2								3,2
660	609	566	528	495	466	440	396	360	330	283	248	3,3								3,4
680	628	583	544	510	480	453	408	371	340	291	255	3,4								3,6
700	646	600	560	525	494	467	420	382	350	300	263	3,5								3,8
720	665	617	576	540	508	480	432	393	360	309	270	3,6								4,0
740	683	634	592	555	522	493	444	404	370	318	278	3,7								4,3
x 0,88			608	570	537	507	456	415	380	326	285	3,8								4,5
H_2O ⇄ AHL			624	585	551	520	468	425	390	335	293	3,9								4,7
x 1,14			640	600	565	533	480	436	400	343	300	4,0								5,0

LU / XR: 1 – 5 bar
AD: 1,5 – 6 bar
ID / AI: 2 – 8 bar
IDK / Air Mix: 1 – 6 bar
TTI: 1 – 7 bar

ME 735

15.2 Spraying nozzles for liquid manure

Nozzle type	Manufacturer	Permissible pressure range [bar]	
		min. pressure	max. pressure
3- jet	agrotop	2	8
7- hole	TeeJet	1,5	4
FD	Lechler	1,5	4
Drag hose	AMAZONE	1	4

15.2.1 Spray table for three-ray nozzles, spraying height 120 cm

AMAZONE - Spray table for three-ray nozzles (yellow)

Pressure	Nozzle output		AUS spray rate (l/ha) / km/h								
	Water	AUS	6	7	8	9	10	11	12	14	16
(bar)	(l/min)										
1,0	0,36	0,32	64	55	48	43	39	35	32	28	24
1,2	0,39	0,35	69	60	52	47	42	38	35	30	26
1,5	0,44	0,39	78	67	59	53	47	43	39	34	30
1,8	0,48	0,42	85	73	64	57	51	47	43	37	32
2,0	0,50	0,44	88	75	66	59	53	48	44	38	33
2,2	0,52	0,46	92	78	69	62	55	50	46	39	35
2,5	0,55	0,49	98	84	74	66	57	54	49	52	37
2,8	0,58	0,52	103	88	77	69	62	56	52	44	39
3,0	0,60	0,53	106	91	80	71	64	58	53	46	40

AMAZONE - Spray table for three-ray nozzles (red)

Pressure	Nozzle output		AUS spray rate (l/ha) / km/h								
	Water	AUS	6	7	8	9	10	11	12	14	16
(bar)	(l/min)										
1.0	0.61	0.54	108	93	81	72	65	59	54	47	41
1.2	0.67	0.59	118	101	88	78	70	64	59	51	44
1.5	0.75	0.66	132	114	99	88	79	72	66	57	50
1.8	0.79	0.69	138	119	104	92	83	76	69	60	52
2.0	0.81	0.71	142	122	107	95	85	78	71	61	54
2.2	0.84	0.74	147	126	111	98	88	80	74	63	56
2.5	0.89	0.78	155	133	117	104	93	84	78	67	59
2.8	0.93	0.82	163	140	122	109	98	87	82	70	61
3.0	0.96	0.84	168	144	126	112	101	92	84	72	63

AMAZONE - Spray table for three-ray nozzles (blue)

Pres-sure	Nozzle output		AUS spray rate (l/ha) / km/h								
	Water	AUS	6	7	8	9	10	11	12	14	16
(bar)	(l/min)										
1.0	0.86	0.76	152	130	114	101	91	83	76	65	57
1.2	0.94	0.83	166	142	124	110	99	91	83	71	62
1.5	1.05	0.93	186	159	140	124	112	102	93	80	70
1.8	1.11	0.98	196	167	147	131	117	107	98	84	74
2.0	1.15	1.01	202	173	152	135	121	110	101	87	76
2.2	1.20	1.06	212	182	159	141	127	116	106	91	80
2.5	1.26	1.12	224	192	168	149	135	122	112	96	84
2.8	1.32	1.17	234	201	176	156	141	128	117	101	88
3.0	1.36	1.20	240	206	180	160	144	131	120	103	90

AMAZONE - Spray table for three-ray nozzles (white)

Pres-sure	Nozzle output		AUS spray rate (l/ha) / km/h								
	Water	AUS	6	7	8	9	10	11	12	14	16
(bar)	(l/min)										
1.0	1.16	1.03	206	177	155	137	124	213	103	89	78
1.2	1.27	1.12	224	192	168	149	134	222	112	96	84
1.5	1.42	1.26	252	217	190	168	151	138	126	109	95
1.8	1.56	1.38	277	237	207	184	166	151	139	119	104
2.0	1.64	1.45	290	249	217	193	174	158	145	125	109
2.2	1.73	1.54	307	263	230	204	185	168	154	132	115
2.5	1.84	1.62	325	279	244	216	195	178	163	140	122
2.8	1.93	1.71	342	293	256	228	205	187	171	147	128
3.0	2.01	1.78	356	305	267	237	214	194	178	153	134

15.3 Spray table for 7-hole nozzles

AMAZONE Spray table for 7-hole nozzle SJ7-02VP (yellow)

Pres-sure	Nozzle output per dosing disc		AUS spray rate AHL (l/ha) / km/h								
	Wasser	AHL	6	7	8	9	10	11	12	14	16
(bar)	(l/min)										
1,5	0,55	0,49	98	84	74	65	59	53	49	42	37
2,0	0,64	0,57	114	98	86	76	68	62	57	49	43
2,5	0,72	0,64	128	110	96	85	77	70	64	55	48
3,0	0,80	0,71	142	122	107	95	85	77	71	61	53
3,5	0,85	0,75	150	129	113	100	90	82	75	64	56
4,0	0,93	0,82	164	141	123	109	98	89	82	70	62

AMAZONE Spray table for 7-hole nozzle SJ7-03VP (blue)

Pres-sure	Nozzle output per dosing disc		AUS spray rate AHL (l/ha) / km/h								
	Wasser	AHL	6	7	8	9	10	11	12	14	16
(bar)	(l/min)										
1,5	0,87	0,77	154	132	116	103	92	84	77	66	58
2,0	1,00	0,88	176	151	132	117	106	96	88	75	66
2,5	1,10	0,97	194	166	146	129	116	106	97	83	73
3,0	1,18	1,04	208	178	156	139	125	113	104	89	78
3,5	1,27	1,12	224	192	168	149	134	122	112	96	84
4,0	1,31	1,16	232	199	174	155	139	127	116	99	87

AMAZONE Spray table for 7-hole nozzle SJ7-04VP (red)

Pres-sure	Nozzle output per dosing disc		AUS spray rate AHL (l/ha) / km/h								
	Wasser	AHL	6	7	8	9	10	11	12	14	16
(bar)	(l/min)										
1,5	1,17	1,04	208	178	156	139	125	113	104	89	78
2,0	1,33	1,18	236	202	177	157	142	129	118	101	89
2,5	1,45	1,28	256	219	192	171	154	140	128	110	96
3,0	1,55	1,37	274	235	206	183	164	149	137	117	103
3,5	1,66	1,47	295	253	221	196	177	161	147	126	110
4,0	1,72	1,52	304	261	228	203	182	166	152	130	114

AMAZONE Spray table for 7-hole nozzle SJ7-05VP (brown)

Pres-sure	Nozzle output per dosing disc		AUS spray rate AHL (l/ha) / km/h								
	Wasser	AHL	6	7	8	9	10	11	12	14	16
(bar)	(l/min)										
1,5	1,49	1,32	264	226	198	176	158	144	132	113	99
2,0	1,68	1,49	298	255	224	199	179	163	149	128	112
2,5	1,83	1,62	324	278	243	216	194	177	162	139	122
3,0	1,95	1,73	346	297	260	231	208	189	173	148	130
3,5	2,11	1,87	374	321	281	249	224	204	187	160	140
4,0	2,16	1,91	382	327	287	255	229	208	191	164	143

AMAZONE Spray table for 7-hole nozzle SJ7-06VP (grey)

Pres-sure	Nozzle output per dosing disc		AUS spray rate AHL (l/ha) / km/h								
	Wasser	AHL	6	7	8	9	10	11	12	14	16
(bar)	(l/min)										
1,5	1,77	1,57	314	269	236	209	188	171	157	135	118
2,0	2,01	1,78	356	305	267	237	214	194	178	153	134
2,5	2,19	1,94	388	333	291	259	233	212	194	166	146
3,0	2,35	2,08	416	357	312	277	250	227	208	178	156
4,0	2,61	2,31	562	396	347	308	277	252	231	198	173

AMAZONE Spray table for 7-hole nozzle SJ7-08VP (white)

Pres-sure	Nozzle output per dosing disc		AUS spray rate AHL (l/ha) / km/h								
	Wasser	AHL	6	7	8	9	10	11	12	14	16
(bar)	(l/min)										
1,5	2,28	2,02	404	346	303	269	242	220	202	173	152
2,0	2,66	2,35	470	403	353	313	282	256	235	201	176
2,5	2,94	2,60	520	446	390	347	312	284	260	223	195
3,0	3,15	2,79	558	478	419	372	335	304	279	239	209
4,0	3,46	3,06	612	525	459	408	367	334	306	262	230

15.3.1 Spray table for FD- nozzles

AMAZONE Spray table for FD-04- nozzle

Pres-sure	Nozzle output per dosing disc		AUS spray rate AHL (l/ha) / km/h								
	Water	AHL	6	7	8	9	10	11	12	14	16
(bar)	(l/min)										
1,5	1,13	1,00	200	171	150	133	120	109	100	86	75
2,0	1,31	1,15	230	197	173	153	138	125	115	99	86
2,5	1,46	1,29	258	221	194	172	155	141	129	111	97
3,0	1,60	1,41	282	241	211	188	169	154	141	121	106
4,0	1,85	1,63	326	279	245	217	196	178	163	140	122

AMAZONE Spray table for FD-05- nozzle

Pres-sure	Nozzle output per dosing disc		AUS spray rate AHL (l/ha) / km/h								
	Water	AHL	6	7	8	9	10	11	12	14	16
(bar)	(l/min)										
1,5	1,41	1,24	248	213	186	165	149	135	124	106	93
2,0	1,63	1,44	288	247	216	192	173	157	144	123	108
2,5	1,83	1,61	322	276	242	215	193	176	161	138	121
3,0	2,00	1,76	352	302	264	235	211	192	176	151	132
4,0	2,31	2,03	406	348	305	271	244	221	203	174	152

AMAZONE Spray table for FD-06- nozzle

Pres-sure	Nozzle output per dosing disc		AUS spray rate AHL (l/ha) / km/h								
	Water	AHL	6	7	8	9	10	11	12	14	16
(bar)	(l/min)										
1,5	1,70	1,49	298	255	224	199	179	163	149	128	112
2,0	1,96	1,72	344	295	258	229	206	188	172	147	129
2,5	2,19	1,93	386	331	290	257	232	211	193	165	145
3,0	2,40	2,11	422	362	317	282	253	230	211	181	158
4,0	2,77	2,44	488	418	366	325	293	266	244	209	183

AMAZONE Spray table for FD-08- nozzle

Pres-sure	Nozzle output per dosing disc		AUS spray rate AHL (l/ha) / km/h								
	Water	AHL	6	7	8	9	10	11	12	14	16
(bar)	(l/min)										
1,5	2,26	1,99	398	341	299	265	239	217	199	171	149
2,0	2,61	2,30	460	394	345	307	276	251	230	197	173
2,5	2,92	2,57	514	441	386	343	308	280	257	220	193
3,0	3,20	2,82	563	483	422	375	338	307	282	241	211
4,0	3,70	3,25	650	557	488	433	390	355	325	279	244

AMAZONE Spray table for FD-10- nozzle

Pres-sure	Nozzle output per dosing disc		AUS spray rate AHL (l/ha) / km/h								
	Water	AHL	6	7	8	9	10	11	12	14	16
(bar)	(l/min)										
1,5	2,83	2,49	498	427	374	332	299	272	249	214	187
2,0	3,27	2,88	576	494	432	384	345	314	288	246	216
2,5	3,65	3,21	642	551	482	429	385	350	321	275	241
3,0	4,00	3,52	704	604	528	469	422	384	352	302	264
4,0	4,62	4,07	813	697	610	542	488	444	407	348	305

15.4 Spray table for drag hose unit

AMAZONE Spray table for dosing disc 4916-26, (dia. 0.65 mm)

Pres-sure	Nozzle output per dosing disc		AUS spray rate (l/ha) / km/h								
	Water	AUS	6	7	8	9	10	11	12	14	16
(bar)	(l/min)										
1,0	0,20	0,18	71	61	53	47	43	37	36	31	27
1,2	0,22	0,19	78	67	58	52	47	43	39	34	29
1,5	0,24	0,21	85	73	64	57	51	47	43	37	32
1,8	0,26	0,23	92	79	69	61	55	50	46	40	35
2,0	0,28	0,25	99	85	74	66	60	54	50	43	37
2,2	0,29	0,26	103	88	77	68	62	56	52	44	39
2,5	0,31	0,27	110	94	82	73	66	60	55	47	41
2,8	0,32	0,28	113	97	85	76	68	62	57	49	43
3,0	0,34	0,30	120	103	90	80	72	66	60	52	45
3,5	0,36	0,32	127	109	96	85	77	70	64	55	48
4,0	0,39	0,35	138	118	104	92	83	76	69	59	52

AMAZONE Spray table with dosing disc 4916-32, (dia. 0.8 mm)

Pres-sure	Nozzle output per dosing disc		AUS spray rate (l/ha) / km/h								
	Water	AUS	6	7	8	9	10	11	12	14	16
(bar)	(l/min)										
1,0	0,31	0,27	110	94	82	73	66	60	55	47	41
1,2	0,34	0,30	120	103	90	80	72	66	60	52	45
1,5	0,38	0,34	135	115	101	90	81	74	68	58	51
1,8	0,41	0,36	145	124	109	97	87	79	73	62	55
2,0	0,43	0,38	152	130	114	101	92	83	76	65	57
2,2	0,45	0,40	159	137	119	106	96	87	80	69	60
2,5	0,48	0,42	170	146	127	113	102	93	85	73	64
2,8	0,51	0,45	181	155	135	120	109	98	91	78	68
3,0	0,53	0,47	188	161	141	125	113	103	94	81	71
3,5	0,57	0,50	202	173	151	135	121	110	101	87	76
4,0	0,61	0,54	216	185	162	144	130	118	108	93	81

AMAZONE Spray table for dosing disc 4916-39, (dia. 1.0 mm) (standard)

Pres-sure	Nozzle output per dosing disc		AUS spray rate (l/ha) / km/h								
	Water	AUS	6	7	8	9	10	11	12	14	16
(bar)	(l/min)										
1,0	0,43	0,38	153	131	114	101	92	84	77	66	57
1,2	0,47	0,41	167	143	124	110	100	91	84	72	62
1,5	0,53	0,47	187	160	141	126	112	102	94	80	71
1,8	0,58	0,51	204	175	154	137	122	112	102	88	77
2,0	0,61	0,53	216	185	162	144	130	118	108	93	81
2,2	0,64	0,56	227	194	170	151	136	124	114	97	85
2,5	0,68	0,59	240	206	180	160	142	132	120	103	90
2,8	0,71	0,62	251	215	189	168	151	137	126	108	95
3,0	0,74	0,64	262	224	197	175	158	143	131	112	99
3,5	0,79	0,69	280	236	210	186	168	153	140	118	105
4,0	0,85	0,74	302	259	226	201	181	165	151	130	113

AMAZONE Spray table for dosing disc 4916-45, (dia. 1.2 mm)

Pres-sure	Nozzle output per dosing disc		AUS spray rate (l/ha) / km/h								
	Water	AUS	6	7	8	9	10	11	12	14	16
(bar)	(l/min)										
1,0	0,57	0,50	202	173	151	135	121	110	101	87	76
1,2	0,62	0,55	219	188	165	146	132	120	110	94	83
1,5	0,70	0,62	248	212	186	165	149	135	124	106	93
1,8	0,77	0,68	273	234	204	182	164	148	137	117	102
2,0	0,81	0,72	287	246	215	192	172	157	144	123	108
2,2	0,86	0,76	304	261	228	203	183	166	152	131	114
2,5	0,92	0,81	326	279	244	217	196	178	163	140	122
2,8	0,96	0,85	340	291	255	227	204	186	170	146	128
3,0	1,00	0,89	354	303	266	236	213	193	177	152	133
3,5	1,10	0,97	389	334	292	260	234	213	195	167	146
4,0	1,16	1,03	411	352	308	274	246	224	206	176	154

AMAZONE Spray table for dosing disc 4916-55, (dia. 1.4 mm)

Pres-sure	Nozzle output per dosing disc		AUS spray rate (l/ha) / km/h								
	Water	AUS	6	7	8	9	10	11	12	14	16
(bar)	(l/min)										
1,0	0,86	0,76	304	261	228	203	183	166	152	131	114
1,2	0,93	0,82	329	282	247	219	198	180	165	141	124
1,5	1,05	0,93	372	319	278	248	223	203	186	160	139
1,8	1,15	1,02	407	349	305	271	245	222	204	175	153
2,0	1,22	1,08	432	370	324	288	259	236	216	185	162
2,2	1,27	1,12	450	385	337	300	270	245	225	163	168
2,5	1,35	1,19	478	410	358	319	287	261	239	205	179
2,8	1,43	1,27	506	434	380	337	304	276	253	217	190
3,0	1,47	1,30	520	446	390	347	312	284	260	223	195
3,5	1,59	1,41	563	482	422	375	338	307	282	241	211
4,0	1,69	1,50	598	513	449	399	359	327	299	257	225

15.5 Conversion table for spraying ammonium nitrate / urea solution (AUS) liquid fertiliser

(Density 1.28 kg/l, i.e. approx. 28 kg N for 100 kg of liquid fertiliser or 36 kg N for 100 litres of liquid fertiliser at 5 - 10 °C)

N kg	Sol. N l	Sol. N kg	N kg	Sol. N l	Sol. N kg	N kg	Sol. N l	Sol. N kg	N kg	Sol. N l	Sol. N kg
10	27.8	35.8	52	144.6	186.0	94	261.2	335.8	136	378.0	485.0
12	33.3	42.9	54	150.0	193.0	96	266.7	342.7	138	384.0	493.0
14	38.9	50.0	56	155.7	200.0	98	272.0	350.0	140	389.0	500.0
16	44.5	57.1	58	161.1	207.3	100	278.0	357.4	142	394.0	507.0
18	50.0	64.3	60	166.7	214.2	102	283.7	364.2	144	400.0	515.0
20	55.5	71.5	62	172.3	221.7	104	285.5	371.8	146	406.0	521.0
22	61.6	78.5	64	177.9	228.3	106	294.2	378.3	148	411.0	529.0
24	66.7	85.6	66	183.4	235.9	108	300.0	386.0	150	417.0	535.0
26	75.0	92.9	68	188.9	243.0	110	305.6	393.0	155	431.0	554.0
28	77.8	100.0	70	194.5	250.0	112	311.1	400.0	160	445.0	572.0
30	83.4	107.1	72	200.0	257.2	114	316.5	407.5	165	458.0	589.0
32	89.0	114.2	74	204.9	264.2	116	322.1	414.3	170	472.0	607.0
34	94.5	121.4	76	211.6	271.8	118	328.0	421.0	175	486.0	625.0
36	100.0	128.7	78	216.5	278.3	120	333.0	428.0	180	500.0	643.0
38	105.6	135.9	80	222.1	285.8	122	339.0	436.0	185	514.0	660.0
40	111.0	143.0	82	227.9	292.8	124	344.0	443.0	190	527.0	679.0
42	116.8	150.0	84	233.3	300.0	126	350.0	450.0	195	541.0	696.0
44	122.2	157.1	86	238.6	307.5	128	356.0	457.0	200	556.0	714.0
46	127.9	164.3	88	242.2	314.1	130	361.0	465.0			
48	133.3	171.5	90	250.0	321.7	132	367.0	471.0			
50	139.0	178.6	92	255.7	328.3	134	372.0	478.0			

AMAZONEN-WERKE
H. DREYER GmbH & Co. KG

Postfach 51
D-49202 Hasbergen-Gaste
Germany

Tel.:+ 49 (0) 5405 501-0
e-mail:amazone@amazone.de
http://www.amazone.de