Operating Manual

AMAZONE

Cirrus Activ

6002

MG4020
BAH0052.0 01.11

Please read and follow this operating manual before putting the machine into operation. Keep it in a safe place for future use.

en

Reading the instruction

manual and to adhere to it should not appear to be inconvenient and superfluous as it is not enough to hear from others and to realise that a machine is good, to buy it and to believe that now everything would work by itself. The person concerned would not only harm himself but also make the mistake of blaming the machine for the reason of a possible failure instead of himself. In order to ensure a good success one should go into the mind of a thing or make himself familiar with every part of the machine and to get acquainted with its handling. Only this way, you would be satisfied both with the machine as also with yourself. To achieve this is the purpose of this instruction manual.

Leipzig-Plagwitz 1872. Rud. Sack.

Identification data

Enter the machine identification data here. You will find the identification data on the rating plate.

Machine identification number: (ten-digit)	
Type:	Cirrus Activ
Year of manufacture:	
Basic weight (kg):	
Approved total weight (kg):	
Maximum load (kg):	

Manufacturer's address

AMAZONEN-WERKE

H. DREYER GmbH & Co. KG

Postfach 51

D-49202 Hasbergen, Germany

Tel.: + 49 5405 501-0

Fax: + 49 5405 501-234

E-mail: amazone@amazone.de

Spare part orders

Spare parts lists are freely accessible in the spare parts portal at www.amazone.de.

Please send orders to your AMAZONE dealer.

Formalities of the operating manual

Document number: MG4020

Compilation date: 01.11

© Copyright AMAZONEN-WERKE H. DREYER GmbH & Co. KG, 2011

All rights reserved.

Reprinting, even of sections, only possible with the approval of AMAZONEN-WERKE H. DREYER GmbH & Co. KG.

Foreword

Dear Customer,

You have chosen one of the quality products from the wide product range of AMAZONEN-WERKE, H. DREYER GmbH & Co. KG. We thank you for your confidence in our products.

On receiving the machine, check to see if it was damaged during transport or if parts are missing. Using the delivery note, check that the machine was delivered in full including the ordered special equipment. Damage can only be rectified if problems are signalled immediately!

Before first commissioning, read and understand this operating manual, and particularly the safety information. Only after careful reading will you be able to benefit from the full scope of your newly purchased machine.

Please ensure that all the machine operators have read this operating manual before commissioning the machine.

Should you have problems or queries, please consult this operating manual or give us a call.

Regular maintenance and timely replacement of worn or damaged parts increases the lifespan of your machine.

User evaluation

Dear Reader,

We update our operating manuals regularly. Your suggestions for improvement help us to create ever more user-friendly manuals. Send us your suggestions by fax.

AMAZONEN-WERKE

H. DREYER GmbH & Co. KG

Postfach 51

D-49202 Hasbergen, Germany

Tel.: + 49 5405 501-0

Fax: + 49 5405 501-234

E-mail: amazone@amazone.de

1 User Information 10
1.1 Purpose of the document 10
1.1 Locations in the operating manual 10
1.2 Diagrams used 10

2 General Safety Instructions 11
2.1 Obligations and liability 11
2.2 Representation of safety symbols 13
2.3 Organisational measures 14
2.4 Safety and protection equipment 14
2.5 Informal safety measures 14
2.6 User training 15
2.7 Safety measures in normal operation 16
2.8 Dangers from residual energy 16
2.9 Maintenance and repair work, fault elimination 16
2.10 Structural changes 17
2.10.1 Spare and wear parts and aids 18
2.11 Cleaning and disposal 18
2.12 User workstation 18
2.13 Warning pictograms and other signs on the machine 19
2.13.1 Positioning of warning pictograms and other labels 28
2.14 Dangers if the safety information is not observed 31
2.15 Safety-conscious working 31
2.16 Safety information for users 32
2.16.1 General safety and accident prevention information 32
2.16.2 Hydraulic system 36
2.16.3 Electrical system 37
2.16.4 Attached machines 37
2.16.5 Brake system 38
2.16.6 Tyres 39
2.16.7 PTO shaft operation 40
2.16.8 Operation of the seed drill 41
2.16.9 Cleaning, maintenance and repairs 42

3 Loading and unloading 43
3.1 Loading the Cirrus 44
3.1.1 Lowering the rotary cultivator onto the transport vehicle 45
3.2 Unloading the Cirrus 46

4 Product description 47
4.1 Overview of subassemblies 48
4.2 Safety and protection equipment 52
4.3 Overview – Supply lines between the tractor and the machine 54
4.4 Transportation equipment 55
4.5 Intended use 57
4.6 Danger area and danger points 58
4.7 Rating plate and CE mark 59
4.8 Technical data 60
4.9 Conformity 61
4.10 Necessary tractor equipment 61
4.11 Noise production data 62

5 Structure and function 63
5.1 Electrohydraulic control blocks 64
5.2 Hydraulic hose lines 64

5.2.1 Coupling the hydraulic hose lines 64
5.2.2 Uncoupling the hydraulic hose lines 65
5.3 Dual-circuit pneumatic braking system 66
5.3.1 Coupling the brake and supply lines 67
5.3.2 Uncoupling the supply and brake line 69
5.3.3 Control elements of the dual-circuit pneumatic braking system 70
5.4 Hydraulic operating brake system 72
5.4.1 Coupling the hydraulic service brake system 73
5.4.2 Uncoupling the hydraulic service brake system 74
5.5 AMATRON+ control terminal 75
5.6 PTO shaft 77
5.6.1 Coupling the PTO shaft to the tractor 78
5.6.2 Uncoupling the PTO shaft from the tractor 79
5.7 Function of the rotary cultivator 80
5.8 Working depth of the rotary cultivator 82
5.9 Rotary cultivator drive 84
5.9.1 Tractor universal joint shaft speed / tine speed 85
5.10 Length of the soil tillage tines 86
5.11 Rotary cultivator levelling bar 86
5.12 Rotary cultivator side panels 87
5.13 Roller holder 88
5.14 Seed hopper 88
5.14.1 Digital fill level monitoring (optional) 89
5.15 Seed dosing 90
5.15.1 Table: Dosing rollers 91
5.15.2 Table Seed dosing rollers 92
5.15.3 Seed rate adjustment with full dosing (optional) 93
5.15.4 Increasing sowing rate, coulter pressure and harrow pressure 95
5.16 Blower 96
5.16.1 Distributor head 97
5.17 Radar 97
5.18 Wedge ring tyres 98
5.19 Seed planting 98
5.19.1 RoTeC^{+} coulter 99
5.19.2 Coulter pressure 100
5.20 Exact harrow 101
5.21 Roller harrow (optional) 102
5.22 Markers 103
5.23 Creation of tramlines 104
5.23.1 Examples for creating tramlines 106
5.23.2 Tramline rhythm 4, 6 and 8 108
5.23.3 Tramline rhythm 2 plus and 6 plus 109
5.23.4 Half-sided switching off (part width) 110
5.23.5 Tramline marker (optional) 110

6 Commissioning 111

6.1 Checking the suitability of the tractor 112
6.1.1 Calculating the actual values for the total tractor weight, tractor axle loads and load capacities, as well as the minimum ballast 113
6.1.1.3 Calculation of the actual front axle load of the tractor $T_{V\ tat}$ 115
6.1.1.4 Calculation of the actual total weight of the combined tractor and machine 115
6.1.1.5 Calculation of the actual rear axle load of the tractor $T_{H\ tat}$ 115
6.1.1.6 Tyre load capacity 115
6.1.2 Requirements for tractor operation with attached machines 117
6.2 Securing the tractor / machine against unintentional start-up and rolling 118
6.3 Adjusting the length of the PTO shaft to the tractor 119
6.4 Installation regulations for the hydraulic fan drive connection 121

6.5 Initial installation of the holders for the road safety bar 122
6.6 Initial installation of the AMATRON+ 122

7 Coupling and uncoupling the machine 123

7.1 Coupling the machine 123
7.1.1 Connecting the hydraulic connections 128
7.1.2 Making additional connections 128
7.2 Uncoupling the machine 129

8 Settings 132

8.1 Setting the level sensor 132
8.2 Inserting dosing roller in metering unit 134
8.3 Setting the sowing rate with a calibration test 136
8.4 Adjusting blower fan speed 138
8.4.1 Setting the fan speed via the flow control valve of the tractor 138
8.4.2 Adjust the blower speed on the machine pressure limiting valve 139
8.4.3 Setting the fan speed monitoring on the AMATRON+ 139
8.4.3.1 Triggering of the alarm, if the fan speed differs from the setpoint 139
8.5 Setting the coulter pressure 140
8.5.1 Adjusting the RoTeC+ plastic discs 141
8.6 Adjusting the exact harrow 143
8.6.1 Adjusting the harrow tines 143
8.6.2 Setting the exact harrow pressure 144
8.6.2.1 Setting the exact harrow pressure (hydraulic adjustment) 144
8.7 Roller harrow 145
8.7.1 Setting working depth and angle of harrow tines 145
8.7.2 Adjusting the roller pressure 146
8.8 Adjusting the working depth of the rotary cultivator (on the field) 147
8.9 Presetting the hydraulic working depth adjustment of the rotary cultivator (optional) 148
8.10 Adjusting the side panels 149
8.11 Adjusting the levelling bar 150
8.12 Adjusting the speed of the soil tillage tines 150
8.13 Adjusting the track marker length and working intensity 151
8.13.1 Adjusting the tramline rhythm/counter in the AMATRON+ 152
8.14 Half-sided switching off 152
8.15 Moving the track disc carrier of the tramline marker to the operational/transport position 153
8.15.1 Moving the track disc carrier to the working/transport position 153
8.15.2 Adjusting the track discs 154

9 Transportation 155

10 Use of the machine 161

10.1 Removing the transport safety bar 163
10.2 Folding the machine extension arm out and in 164
10.2.1 Folding out the machine extension arms 164
10.2.2 Folding in the machine extension arms 167
10.3 Filling the seed hopper 169
10.3.1 Load the seed hopper with sacked merchandise from a supply vehicle 171
10.3.2 Loading the seed hopper with a filling auger 171
10.3.3 Loading the seed hopper from bulk bags 172
10.3.4 Entering the filling volume in the AMATRON+ 172
10.4 Starting work on the field 173
10.5 Checks 174
10.5.1 Checking the seed planting depth 174
10.6 During work 175
10.7 Turning at end of the field 176
10.7.1 Turning on the axle 177

10.7.2 Turning on the roller ... 177
10.8 End of work on the field ... 178
10.9 Emptying the seed hopper and/or seed dosing unit ... 179
10.9.1 Emptying the seed hopper ... 179
10.9.2 Emptying the dosing unit ... 179

11 Faults ... 182

11.1 No motion of soil tillage tines when work is in progress ... 182
11.2 Wear of the soil tillage tines ... 182
11.3 Residual seed volume indicator ... 183
11.4 Deviations between the preset and actual sowing rates ... 183
11.5 Failure of the AMATRON+ during work ... 184
11.5.1 Transporting the machine to the workshop after failure of the AMATRON+ ... 184
11.6 Fault table ... 186

12 Cleaning, maintenance and repairs ... 187

12.1 Securing the machine coupled to the tractor ... 187
12.2 Securing the lifted machine ... 188
12.3 Cleaning the machine ... 189
12.3.1 Cleaning the distributor head (specialist workshop) ... 190
12.3.2 Shutdown of the machine over a long period of time ... 190
12.4 Lubrication regulations ... 191
12.4.1 Lubricants ... 191
12.4.2 Lubrication point overview ... 192
12.5 Service plan – overview ... 196
12.6 Three-gear transmission ... 199
12.7 Angular gearbox ... 201
12.8 Spur gear trough ... 203
12.8.1 Checking the vent pipes ... 204
12.9 Checking the tyre inflation pressure of the wedge ring tyres (specialist workshop) ... 205
12.10 Checking the tyre inflation pressure of the leading rollers ... 205
12.11 Retighten wheel and hub screws (specialist workshop) ... 206
12.12 Servicing roller chains and chain wheels ... 206
12.13 Servicing the sowing shaft bearing ... 206
12.14 Checking/cleaning/lubricating the ratchet clutch (specialist workshop) ... 207
12.14.1 Installation instructions for ratchet clutch ... 207
12.15 Visual inspection of the lower link pins ... 207
12.16 Hydraulic system ... 208
12.16.1 Labelling hydraulic hose lines ... 209
12.16.2 Maintenance intervals ... 209
12.16.3 Inspection criteria for hydraulic hose lines ... 209
12.16.4 Installation and removal of hydraulic hose lines ... 210
12.17 Dual-circuit pneumatic braking system ... 211
12.17.1 Visual inspection of the dual-circuit pneumatic braking system ... 211
12.17.2 Brake inspection in the specialist workshop ... 212
12.17.3 Exterior inspection of the compressed air tank (dual-circuit pneumatic braking system) ... 213
12.17.4 Checking the pressure in the compressed air tank of the dual-circuit pneumatic braking system (specialist workshop) ... 213
12.17.5 Leak test of the dual-circuit pneumatic braking system (specialist workshop) ... 213
12.17.6 Cleaning the line filters of the dual-circuit pneumatic braking system ... 214
12.18 Workshop settings and repair work ... 215
12.18.1 Adjusting the tramline to the track width/wheelmark spacing (specialist workshop) ... 215
12.18.1.1 Adjusting the tramline to the track width of the cultivating tractor (specialist workshop) ... 215
12.18.2 Setting the track marker for correct fitting in the transport bracket (workshop) ... 218
12.18.3 Replacing the soil tillage tines (specialist workshop) ... 219

12.18.4 Adjusting the unfolding speed of the rotary cultivator (specialist workshop) 220
12.18.5 Repairs to the pressure tank (workshop) 221
12.18.6 Replacing the RoTeC coulter wear tip (workshop) 222
12.19 Lower link pin 222
12.20 Screw tightening torques 223
13 Hydraulic diagrams 224
13.1 Hydraulic diagram (972610) – Cirrus 6002 Activ 224

1 User Information

The User Information section supplies information on use of the operating manual.

1.1 Purpose of the document

This operating manual

- Describes the operation and maintenance of the machine.
- Provides important information on safe and efficient handling of the machine.
- Is a component part of the machine and should always be kept with the machine or the traction vehicle.
- Keep it in a safe place for future use.

1.1 Locations in the operating manual

All the directions specified in the operating manual are always seen from the direction of travel.

1.2 Diagrams used

Handling instructions and reactions

Activities to be carried out by the user are given as numbered instructions. Always keep to the order of the handling instructions. The reaction to the handling instructions is given by an arrow. Example:

1. Handling instruction 1

→ Reaction of the machine to handling instruction 1

2. Handling instruction 2

Lists

Lists without an essential order are shown as a list with bullets. Example:

- Point 1
- Point 2

Number items in diagrams

Numbers in round brackets refer to the item numbers in the diagrams. The first number refers to the diagram and the second number to the item in the figure.

Example: (Fig. 3/6):

- Figure 3
- Item 6

2 General Safety Instructions

This section contains important information on safe operation of the machine.

2.1 Obligations and liability

Comply with the instructions in the operating manual

Knowledge of the basic safety information and safety regulations is a basic requirement for safe handling and fault-free machine operation.

Obligations of the operator

The operator is obliged only to let those people work with/on the machine who

- Are aware of the basic workplace safety information and accident prevention regulations.
- Have been trained in working with/on the machine.
- Have read and understood this operating manual.

The operator is obliged

- To keep all the warning pictograms on the machine in a legible state.
- To replace damaged warning pictograms.

If you still have queries, please contact the manufacturer.

Duties of the operator

Before starting work, anyone charged with working with/on the machine is obliged

- To comply with the basic workplace safety instructions and accident prevention regulations.
- To read and understand the section "General safety information" of this operating manual.
- To read the section " Warning pictograms and other signs on the machine", of this operating manual and to follow the safety instructions of the warning symbols when operating the machine.
- To get to know the machine.
- To read the sections of this operating manual, important for carrying out your work.

If the user discovers that a function is not working properly, then they must eliminate this fault immediately. If this is not the task of the user or if the user does not possess the appropriate technical knowledge, then they should report this fault to their superior (operator).

Risks in handling the machine

The machine has been constructed to the state-of-the art and the recognised rules of safety. However, there may be risks and restrictions which occur when operating the machine

- For the health and safety of the user or third persons,
- For the machine,
- For other goods.

Only use the machine

- For the purpose for which it was intended.
- In a perfect state of repair.

Eliminate any faults that could impair safety immediately.

Guarantee and liability

Our "General conditions of sales and business" are always applicable. These shall be available to the operator, at the latest on the completion of the contract. Guarantee and liability claims for damage to people or goods will be excluded if they can be traced back to one or more of the following causes:

- Improper use of the machine.
- Improper installation, commissioning, operation and maintenance of the machine.
- Operation of the machine with defective safety equipment or improperly attached or non-functioning safety equipment.
- Non-compliance with the instructions in the operating manual regarding commissioning, operation and maintenance.
- Independently-executed construction changes to the machine.
- Insufficient monitoring of machine parts that are subject to wear.
- Improperly executed repairs.
- Disasters through the impact of foreign bodies and acts of God.

2.2 Representation of safety symbols

Safety instructions are indicated by the triangular safety symbol and the highlighted signal word. The signal word (DANGER, WARNING, CAUTION) describes the gravity of the risk and has the following significance:

DANGER

Indicates an immediate high risk, which will result in death or serious physical injury (loss of body parts or long-term damage) if not avoided.

If the instructions are not followed, then this will result in immediate death or serious physical injury.

WARNING

Indicates a medium risk, which could result in death or (serious) physical injury if not avoided.

If the instructions are not followed, then this may result in death or serious physical injury.

CAUTION

Indicates a low risk, which could incur minor or medium-level physical injury or damage to property if not avoided.

IMPORTANT

Indicates an obligation to special behaviour or an activity required for proper machine handling.

Non-compliance with these instructions can cause faults on the machine or in the environment.

NOTE

Indicates handling tips and particularly useful information.

These instructions will help you to use all the functions of your machine to the optimum.

2.3 Organisational measures

The operator must provide the necessary personal protective equipment, such as:

- Protective glasses
- Protective shoes
- Protective suit
- Skin protection agents etc.

The operation manual

- Must always be kept at the place at which the machine is operated.
- Must always be easily accessible for the user and maintenance personnel.

Check all the available safety equipment regularly.

2.4 Safety and protection equipment

Before each commissioning of the machine, all the safety and protection equipment must be properly attached and fully functional. Check all the safety and protection equipment regularly.

Faulty safety equipment

Faulty or disassembled safety and protection equipment can lead to dangerous situations.

2.5 Informal safety measures

As well as all the safety information in this operating manual, comply with the general, national regulations pertaining to accident prevention and environmental protection.

When driving on public roads and routes, then you should comply with the statutory road traffic regulations.

2.6 User training

Only those people who have been trained and instructed may work with/on the machine. The operator must clearly specify the responsibilities of the people charged with operation, maintenance and repair work.

People being trained may only work with/on the machine under the supervision of an experienced person.

People / Activity	Person specially trained for the activity [1]	Trained person [2]	Person with specialist training (specialist workshop) [3]
Loading/Transport	X	X	X
Commissioning	—	X	—
Set-up, tool installation	—	—	X
Operation	—	X	—
Maintenance	—	—	X
Troubleshooting and fault elimination	—	X	X
Disposal	X	—	—

Legend: X..permitted —..not permitted

[1] A person who can assume a specific task and who can carry out this task for an appropriately qualified company.

[2] A person shall be considered as having been instructed, if they have been instructed in the tasks they have to carry out and in the possible risks in the case of improper behaviour and also have been informed about the necessary protective equipment and measures.

[3] People with specialist technical training shall be considered as a specialist. Due to their specialist training and their knowledge of the appropriate regulations, they can evaluate the work with which they have been charged and detect possible dangers.

Comment:

A qualification equivalent to specialist training can be obtained through long term activity in the appropriate field of work.

Only a specialist workshop may carry out maintenance and repair work on the machine, if such work is additionally marked "Workshop". The personnel of a specialist workshop shall possess the appropriate knowledge and suitable aids (tools, lifting and support equipment) for carrying out the maintenance and repair work on the machine in a way which is both appropriate and safe.

2.7 Safety measures in normal operation

Only operate the machine if all the safety and protection equipment is fully functional.

Check the machine at least once a day for visible damage and check the function of the safety and protection equipment.

2.8 Dangers from residual energy

Note that there may be residual mechanical, hydraulic, pneumatic and electrical/electronic energy on the machine.

Use appropriate measures to inform the operating personnel. You can find detailed information in the relevant sections of this operating manual.

2.9 Maintenance and repair work, fault elimination

Carry out prescribed setting, maintenance and inspection work in good time.

Secure all media such as compressed air and the hydraulic system against unintentional start-up.

Carefully fix and secure larger subassemblies to lifting gear when carrying out replacement work.

Check all the screw connections for a firm seat. On completing maintenance work, check the function of safety and protection equipment.

2.10 Structural changes

You may make no changes, expansions or modifications to the machine without the authorisation of AMAZONEN-WERKE. This is also valid when welding support parts.

Any expansion or modification work shall require the written approval of AMAZONEN-WERKE. Only use the modification and accessory parts released by AMAZONEN-WERKE so that the operating permit, for example, remains valid in accordance with national and international regulations.

Vehicles with an official type approval or with equipment connected to a vehicle with a valid type approval or approval for road transport according to the German road traffic regulations must be in the state specified by the approval.

WARNING

Risk of contusions, cuts, dragging, catching or knocks from support parts.

It is forbidden to:

- Drill holes in the frame or on the running gear.
- Increasing the size of existing holes on the frame or the running gear.
- Welding support parts.

2.10.1 Spare and wear parts and aids

Immediately replace any machine parts which are not in a perfect state.

Use only genuine AMAZONE spare and wear parts or the parts cleared by AMAZONEN-WERKE so that the operating permit retains its validity in accordance with national and international regulations. The use of wear and spare parts from third parties does not guarantee that they have been constructed in a way as to meet the requirements placed on them.

AMAZONEN-WERKE accepts no liability for damage arising from the use of non-released spare parts, wear parts or auxiliary materials.

2.11 Cleaning and disposal

Handle and dispose of any materials used carefully, in particular

- When carrying out work on lubrication systems and equipment and
- When cleaning using solvents.

2.12 User workstation

The machine may be operated by only one person sitting in the driver's seat of the tractor.

2.13 Warning pictograms and other signs on the machine

Always keep all the warning pictograms of the machine clean and in a legible state. Replace illegible warning pictograms. You can obtain the warning pictograms from your dealer using the order number (e.g. MD 075).

Warning pictograms - structure

Warning pictograms indicate dangers on the machine and warn against residual dangers. At these points, there are permanent or unexpected dangers.

A warning pictogram consists of two fields:

Field 1

is a pictogram describing the danger, surrounded by triangular safety symbol.

Field 2

is a pictogram showing how to avoid the danger.

Warning pictograms - explanation

The column **Order number and explanation** provides an explanation of the neighbouring warning pictogram. The description of the warning pictograms is always the same and specifies, in the following order:

1. A description of the danger.

   For example: danger of cutting!

2. The consequence of nonobservance of the danger protection instructions.

   For example: causes serious injuries to fingers or hands.

3. Instructions for avoiding the danger.

   For example: only touch machine parts when they have come to a complete standstill.

Order number and explanation	Warning pictograms
MD 075 **Risk of cutting or severing of fingers/hand through direct contact with moving parts involved in the working process!** This danger can cause extremely serious injuries resulting in the loss of limbs. • Never reach into the danger area when the tractor engine is running with the PTO shaft or hydraulic/electrical system connected. • Wait until all moving parts of the machine are at a standstill before reaching into the danger area.	
MD 078 **Risk of crushing of fingers/hand by accessible, moving parts of the machine!** This danger can cause extremely serious injuries resulting in the loss of limbs. Never reach into the danger area when the tractor engine is running with the PTO shaft or hydraulic/electrical system connected.	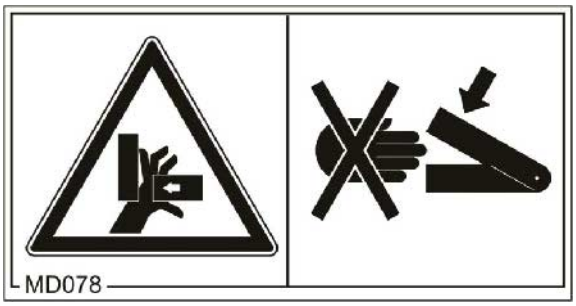
MD 079 **Risk of materials or foreign objects being flung away from or out of the machine when entering or remaining in the danger area of the machine!** These dangers can inflict severe injuries on all parts of the body. • Stay well clear of the danger area of the machine. • Ensure that all persons maintain a sufficient safety distance from the danger area of the machine as long as the tractor engine is running.	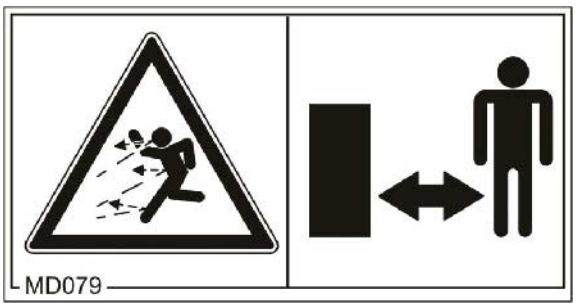

MD 080

Risk of crushing of the entire body due to standing in the swivel range of the drawbar between the tractor and the attached machine!

This danger can cause extremely serious and potentially fatal injuries.

- Standing or walking in the danger area between the tractor and machine is prohibited whenever the tractor engine is running and the tractor is not secured against unintentional rolling.
- Instruct people to leave the danger area between the tractor and the machine whenever the engine of the tractor is running and the tractor is not secured against unintentional rolling.

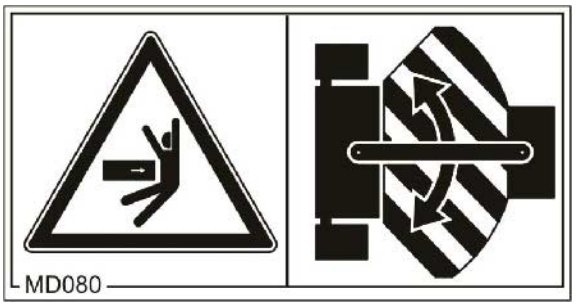

MD 082

Risk of falling when riding the machine on treads or platforms!

This danger can cause extremely serious and potentially fatal injuries.

It is forbidden to ride on the machine or climb the machine when it is running. This ban also applies to machines with treads or platforms.

Ensure that no-one rides with the machine.

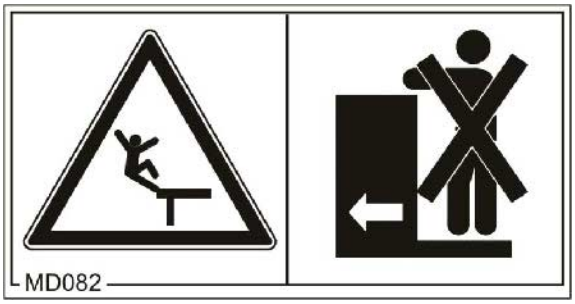

MD 083

Danger of arms being drawn in and/or caught by moving parts involved in the working process!

This danger can cause extremely serious injuries resulting in the loss of limbs.

Never open or remove safety devices when the tractor's engine is running with the cardan shaft connected / hydraulic and electrical system connected.

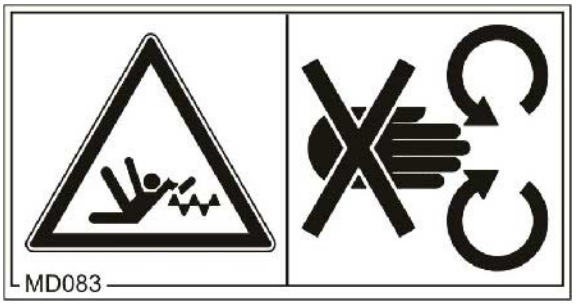

MD 084

Risk of crushing the entire body due to standing in the swivel range when machine parts are being lowered.

This danger can cause extremely serious and potentially fatal injuries.

- It is forbidden to stand in the swivel range of the machine when machine parts are being lowered.
- Instruct personnel to leave the swivel range of any machine parts which can be lowered before you lower the parts.

MD 086

Risk of crushing the entire body due to necessary periods spent under raised, unsecured machine parts.

This danger can cause extremely serious and potentially fatal injuries.

Before spending time in the danger area underneath raised machine parts, secure the raised parts to prevent them from being accidentally lowered.

To do this, use the mechanical support device or the hydraulic locking device.

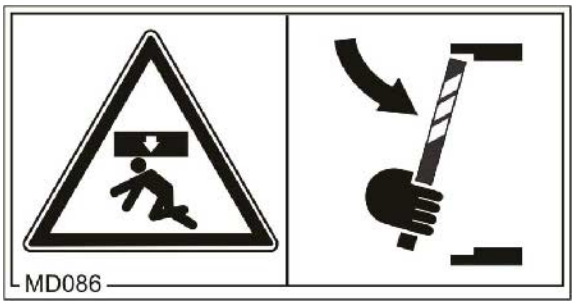

MD 087

Risk of cutting or severing of fingers/hand through direct contact with moving parts involved in the working process!

This danger can cause extremely serious injuries resulting in the loss of limbs.

Stay well clear of the danger area when the tractor engine is running with the PTO shaft or hydraulic/electrical system connected.

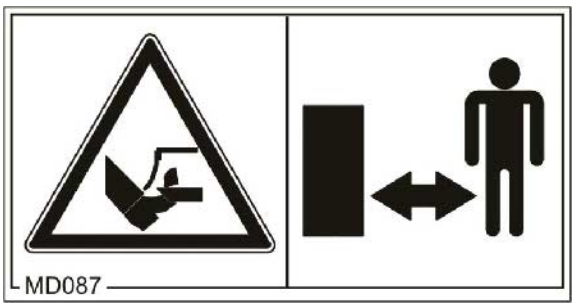

MD 089

Risk of crushing the entire body due to standing under suspended loads or raised machine parts.

This danger can cause extremely serious and potentially fatal injuries.

- It is forbidden to stand under suspended loads or raised machine parts.
- Maintain an adequate safety distance from any suspended loads or raised machine parts.
- Ensure that all personnel maintain an adequate safety distance from suspended loads or raised machine parts.

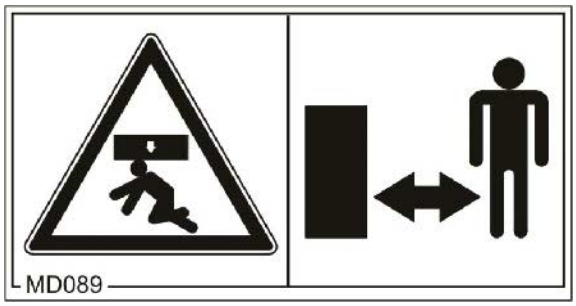

MD 090

Danger of the entire body being rolled over caused by unintended rolling of the parked, unsecured machine!

This can cause extremely serious and potentially fatal injuries.

Secure the machine against unintentional rolling before uncoupling the machine from the tractor or parking it. For this, use the parking brake and/or the wheel chock(s).

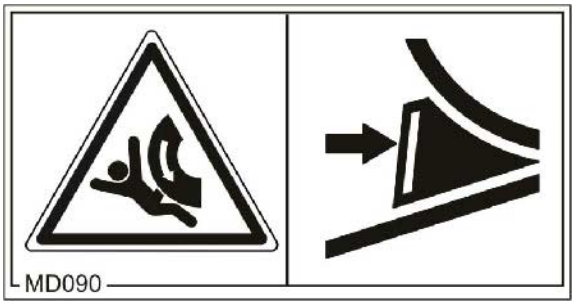

MD 094

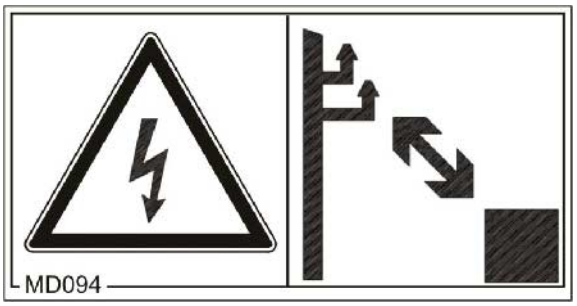

Danger from electric shock or burns due to unintentional contact with electric transmission lines or from approaching high-voltage transmission lines without authorisation.

These dangers can cause extremely serious and potentially fatal injuries.

Maintain an adequate safety distance from transmission lines carrying high voltage.

Nominal voltage	Safety distance from transmission lines
up to 1 kV	1 m
over 1 up to 110 kV	2 m
over 110 up to 220 kV	3 m
over 220 up to 380 kV	4 m

MD 095

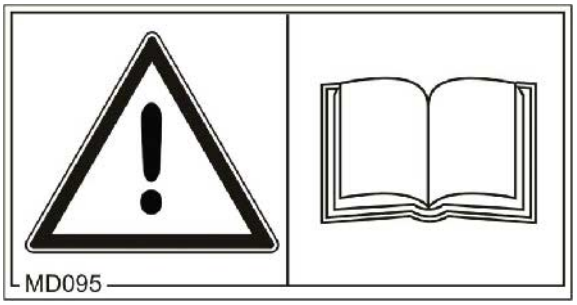

Read and understand the operating manual safety information before starting up the machine!

MD 096

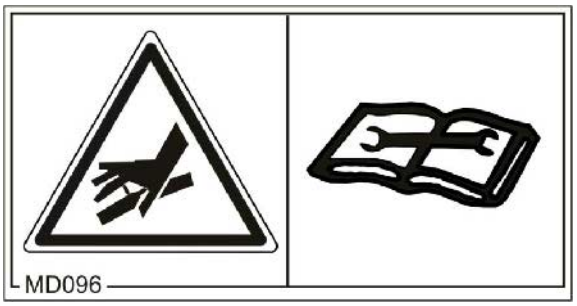

Danger from escaping high-pressure hydraulic fluid due to leaking hydraulic hose lines.

This can inflict serious injuries with potentially fatal consequences if hydraulic fluid escaping at high pressure passes through the skin and into the body.

- Never attempt to plug leaks in hydraulic hose lines using your hand or fingers.
- Read and observe the information in the operating manual before carrying out maintenance work on the hydraulic hose lines.
- If you are injured by hydraulic fluid, contact a doctor immediately.

MD 097

Risk of crushing the entire body due to standing in the stroke area of the three-point suspension when the three-point hydraulic system is actuated.

This danger can cause extremely serious and potentially fatal injuries.

- Personnel are prohibited from entering the stroke area of the three-point suspension when the three-point hydraulic system is actuated.
- Only actuate the operator controls for the tractor's three-point hydraulic system:
  - From the intended workstation.
  - Under no circumstances if you are in the stroke area between the tractor and machine.

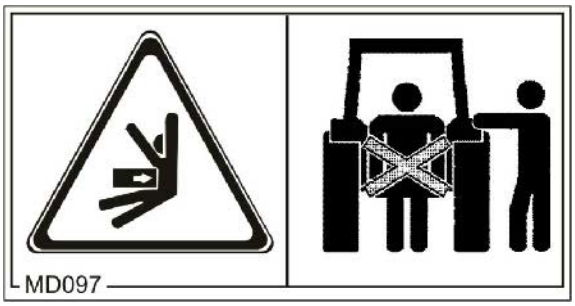

MD 102

Danger during intervention in the machine, e.g. installation, adjusting, troubleshooting, cleaning, maintaining and repairing, due to the tractor and the machine being started unintentionally and rolling.

These dangers can cause extremely serious and potentially fatal injuries.

- Secure the tractor and the machine against unintentional start-up and rolling before any intervention in the machine.
- Depending on the type of intervention, read and understand the information in the relevant sections of the operating manual.

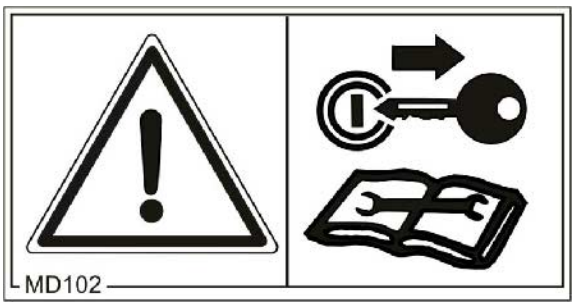

MD 104

Risk of crushing the entire body or impacts due to standing in the swivel range of laterally moving machine parts.

These dangers can cause extremely serious and potentially fatal injuries.

- Maintain an adequate safety distance from moving machine parts while the tractor engine is running.
- Ensure that all personnel maintain an adequate safety distance from moving machine parts.

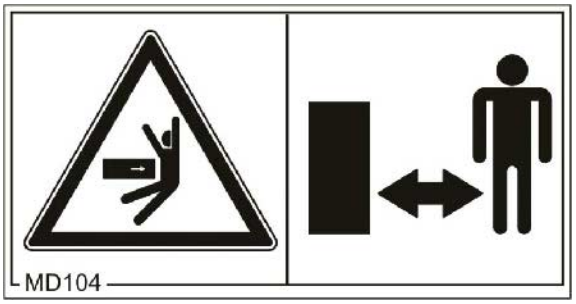

MD 108

Danger from explosion or hydraulic fluid escaping at high pressure caused by the pressure reservoir under gas and oil pressure!

These can inflict serious injuries with potentially fatal consequences if hydraulic fluid escaping at high pressure passes through the skin and into the body.

- Read and understand the information in the operating manual before carrying out maintenance and repair work.
- If you are injured by hydraulic fluid, contact a doctor immediately.

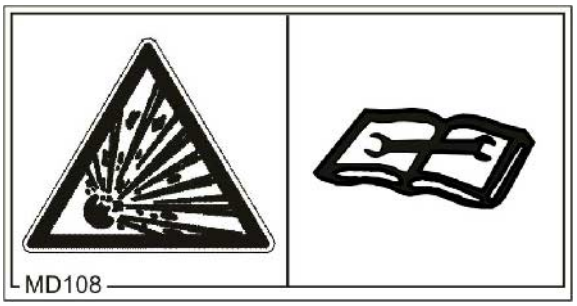

MD 110

This pictogram identifies parts of the machine that serve as a handle.

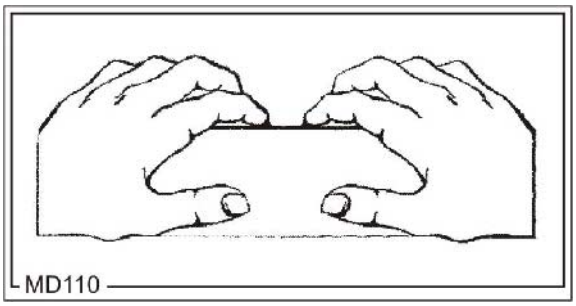

MD 115

The maximum operating pressure of the hydraulic system is 200 bar.

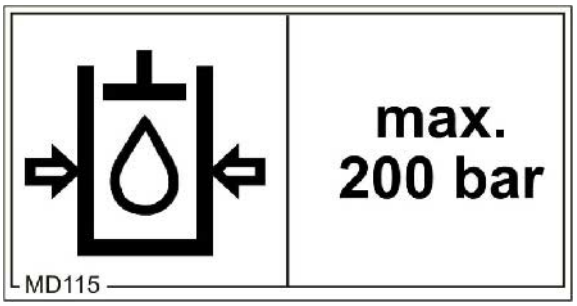

MD 119

This symbol indicates the maximum drive speed (1000 rpm) and direction of rotation of the drive shaft on the machine side.

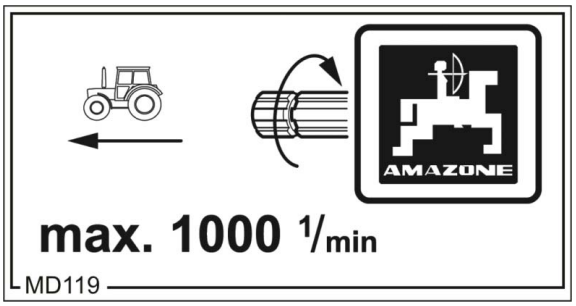

MD 154

Danger of cutting or penetration for other road users caused by transport with unguarded, sharp harrow tines of the seed harrow!

This danger can cause extremely serious and potentially fatal injuries.

Transportation without a correctly fitted transport guard rail is forbidden.

Install the road safety bar provided before starting transportation.

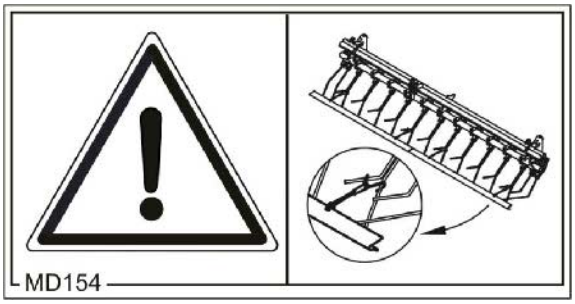

MD 163

Danger of falling caused by unintended twisting of individual roller segments when standing or walking on the support or packer rollers!

This danger can cause extremely serious and potentially fatal injuries.

Never climb onto the roller segments.

2.13.1 Positioning of warning pictograms and other labels

Warning pictograms

The following diagrams show the arrangement of the warning pictograms on the machine.

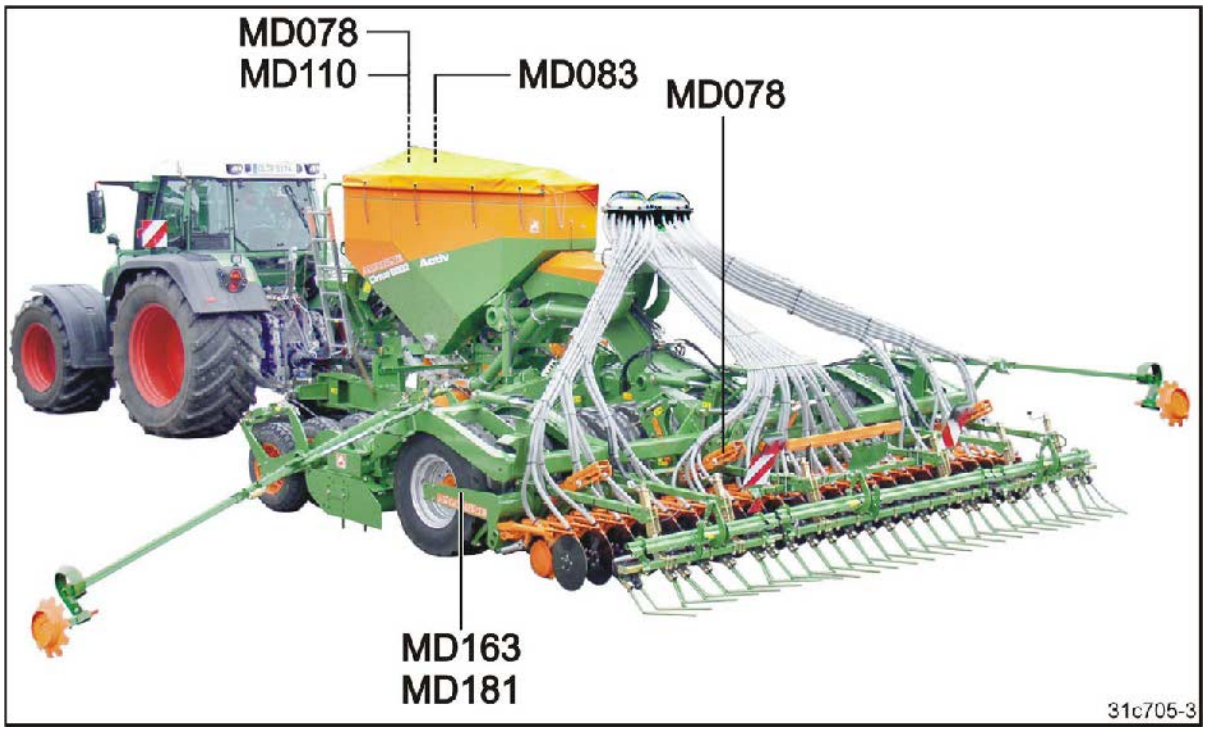

Fig. 1

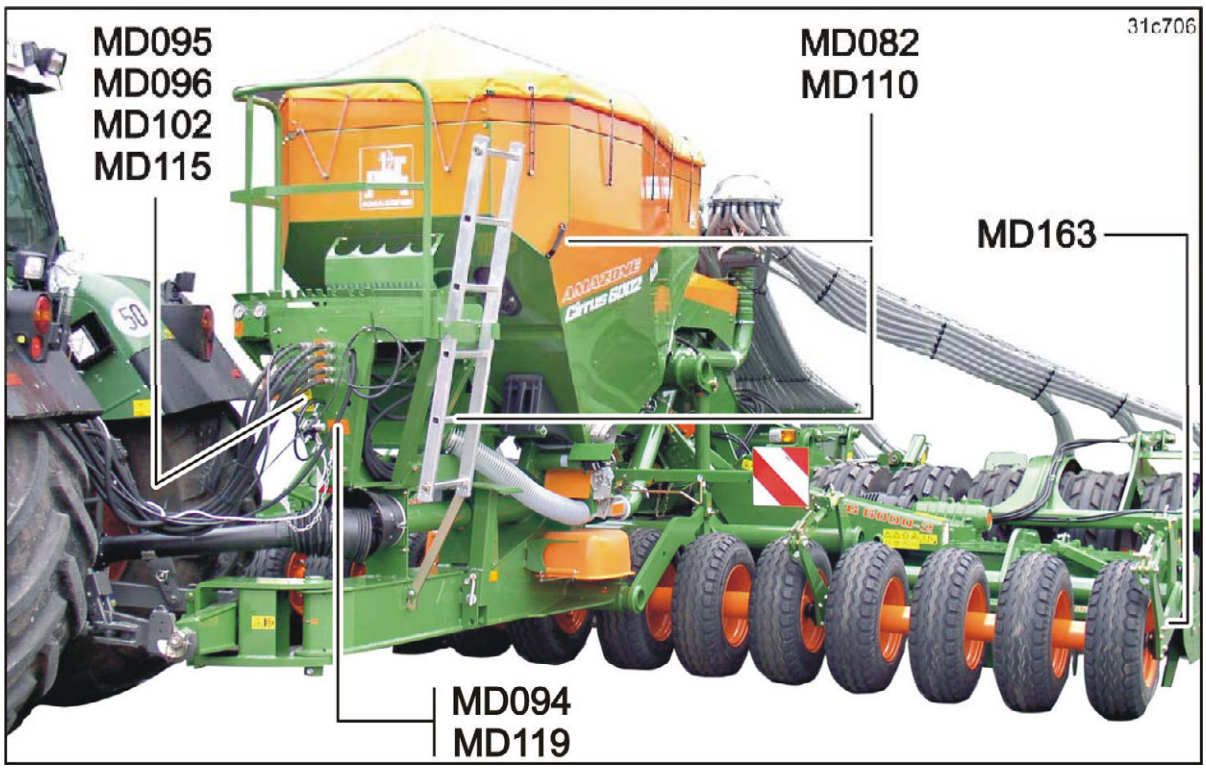

Fig. 2

Fig. 3

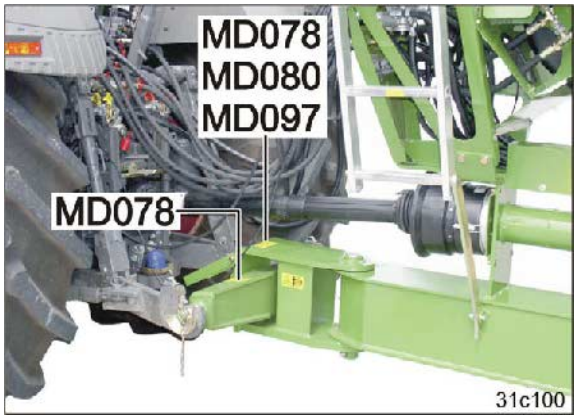

Fig. 4

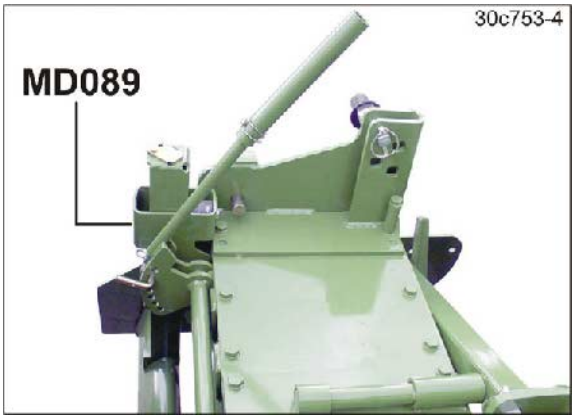

Fig. 5

Fig. 6

Fig. 7

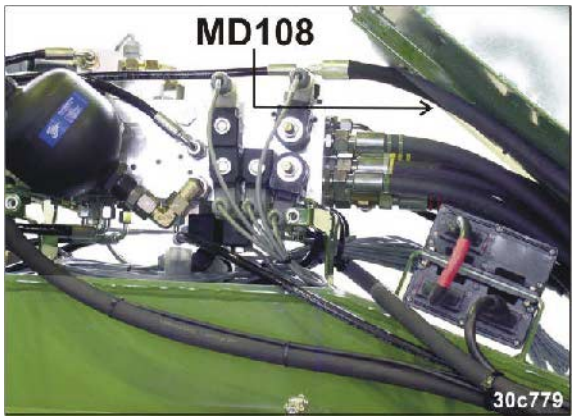

Fig. 8

Fig. 9

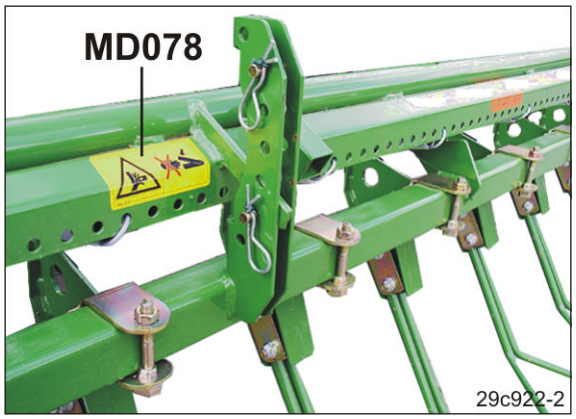

Fig. 10

Fig. 11

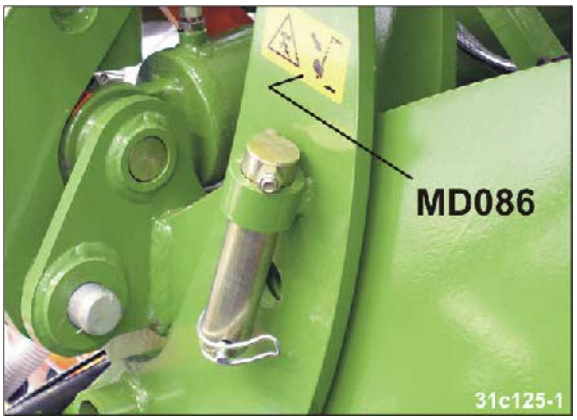

Fig. 12

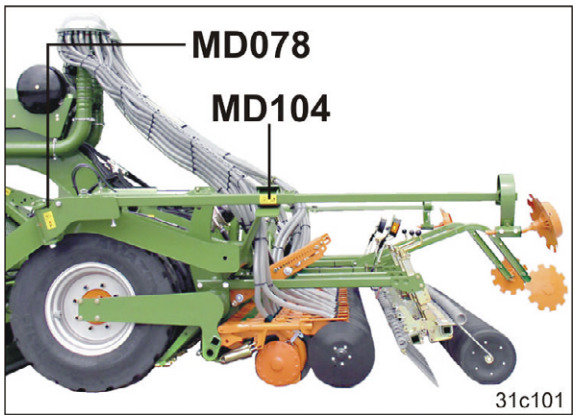

Fig. 13

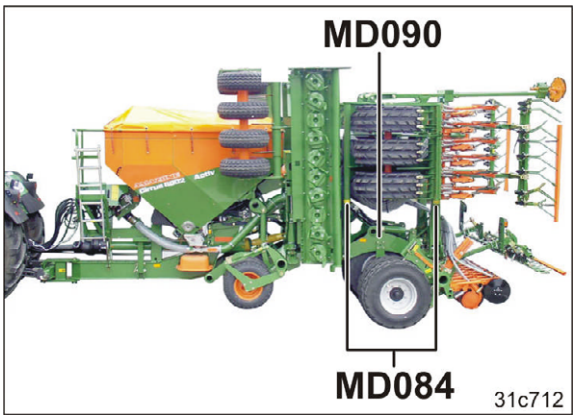

Fig. 14

2.14 Dangers if the safety information is not observed

Nonobservance of the safety information

- Can pose both a danger to people and also to the environment and machine.
- Can lead to the loss of all warranty claims.

Seen individually, non-compliance with the safety information could pose the following risks:

- Danger to people through non-secured working areas.
- Failure of important machine functions.
- Failure of prescribed methods of maintenance and repair.
- Danger to people through mechanical and chemical impacts.
- Risk to environment through leakage of hydraulic fluid.

2.15 Safety-conscious working

Besides the safety information in this operating manual, the national general workplace safety and accident prevention regulations are binding.

Comply with the accident prevention instructions on the warning pictograms.

When driving on public roads and routes, comply with the appropriate statutory road traffic regulations.

2.16 Safety information for users

WARNING

Risk of contusions, cuts, dragging, catching or knocks from insufficient traffic and operational safety.

Before starting up the machine and the tractor, always check their traffic and operational safety.

2.16.1 General safety and accident prevention information

- Beside these instructions, comply with the general valid national safety and accident prevention regulations.
- The warning pictograms and labels attached to the machine provide important information on safe machine operation. Compliance with this information guarantees your safety!
- Before moving off and starting up the machine, check the immediate area of the machine (children)! Ensure that you can see clearly!
- It is forbidden to ride on the machine or use it as a means of transport!
- Drive in such a way that you always have full control over the tractor with the attached machine.

  In so doing, take your personal abilities into account, as well as the road, traffic, visibility and weather conditions, the driving characteristics of the tractor and the connected or coupled machine.

Coupling and uncoupling the machine

- Only connect and transport the machine with tractors suitable for the task.
- When connecting machines to the tractor's three-point hydraulic system, the attachment categories of the tractor and the machine must always be the same!
- Connect the machine to the prescribed equipment in accordance with the specifications.
- When coupling machines to the front or the rear of the tractor, the following may not be exceeded:
  - The approved total tractor weight
  - The approved tractor axle loads
  - The approved load capacities of the tractor tyres
- Secure the tractor and the machine against unintentional rolling, before coupling or uncoupling the machine.
- It is forbidden for people to stand between the machine to be coupled and the tractor, whilst the tractor is moving towards the machine!

  Any helpers may only act as guides standing next to the vehicles, and may only move between the vehicles when both are at a standstill.
- Secure the operating lever of the tractor hydraulic system so that unintentional raising or lowering is impossible, before connecting

the machine to or disconnecting the machine from the tractor's three-point hydraulic system.

- When coupling and uncoupling machines, move the support equipment (if available) to the appropriate position (stability).
- When actuating the support equipment, there is a danger of injury from contusion and cutting points!
- Be particularly careful when coupling the machine to the tractor or uncoupling it from the tractor! There are contusion and cutting points in the area of the coupling point between the tractor and the machine.
- It is forbidden to stand between the tractor and the machine when actuating the three-point hydraulic system.
- Coupled supply lines:
  - Must give without tension, bending or rubbing on all movements when travelling round corners.
  - Must not chafe against other parts.
- The release ropes for quick action couplings must hang loosely and may not release themselves when lowered.
- Also ensure that uncoupled machines are stable!

Use of the machine

- Before starting work, ensure that you understand all the equipment and actuation elements of the machine and their function. There is no time for this when the machine is already in operation!
- Do not wear loose-fitting clothing! Loose clothing increases the risk over being caught by drive shafts!
- Only start-up the machine, when all the safety equipment has been attached and is in the safety position!
- Comply with the maximum load of the connected machine and the approved axle and support loads of the tractor. If necessary, drive only with a partially-filled hopper.
- It is forbidden to stand in the working area of the machine.
- It is forbidden to stand in the turning and rotation area of the machine.
- There are contusion and cutting points at externally-actuated (e.g. hydraulic) machine points.
- Only actuate externally-actuated machine parts when you are sure that there is no-one within a sufficient distance from the machine!
- Secure the tractor against unintentional start-up and rolling, before you leave the tractor.

  For this:
  - Lower the machine onto the ground
  - Apply the tractor parking brake
  - Switch off the tractor engine
  - Remove the ignition key.

Machine transportation

- When using public highways, national road traffic regulations must be observed.
- Before moving off, check:
  - The correct connection of the supply lines
  - The lighting system for damage, function and cleanliness
  - The brake and hydraulic system for visible damage
  - That the tractor parking brake is released completely
  - The function of the brake system.
- Ensure that the tractor has sufficient steering and braking power.

  Any machines and front/rear weights connected to the tractor influence the driving behaviour and the steering and braking power of the tractor.
- If necessary, use front weights.

  The front tractor axle must always be loaded with at least 20% of the empty tractor weight, in order to ensure sufficient steering power.
- Always fix the front or rear weights to the intended fixing points according to regulations.
- Comply with the maximum load of the connected machine and

the approved axle and support loads of the tractor.

- The tractor must guarantee the prescribed brake delay for the loaded vehicle combination (tractor plus connected machine).
- Check the brake power before moving off.
- When turning corners with the machine connected, take the broad load and balance weight of the machine into account.
- Before moving off, ensure sufficient side locking of the tractor lower links, when the machine is fixed to the three-point hydraulic system or lower links of the tractor.
- Before moving off, move all the swivel machine parts to the transport position.
- Before moving off, secure all the swivel machine parts in the transport position against risky position changes. Use the transport locks intended for this.
- Before transporting, secure the operating lever of the three-point hydraulic system against the unintentional raising or lowering of the connected/hitched machine.
- Check that the transport equipment, e.g. lighting, warning equipment and protective equipment, is correctly mounted on the machine.
- Before transportation, carry out a visual check that the upper and lower link bolts are firmly fixed with the lynch pin against unintentional release.
- Adjust your travel speed to the prevailing conditions.
- Before driving downhill, switch to a low gear.
- Before moving off, always switch off the independent wheel braking (lock the pedals).

2.16.2 Hydraulic system

- The hydraulic system is under a high pressure.
- Ensure that the hydraulic hose lines are connected correctly.
- When connecting the hydraulic hose lines, ensure that the hydraulic system is depressurised on both the machine and tractor sides.
- It is forbidden to block the operator controls on the tractor which are used for hydraulic and electrical movements of components, e.g. folding, swivelling and pushing movements. The movement must stop automatically when you release the appropriate control. This does not apply to equipment movements that:
  - are continuous or
  - are automatically locked or
  - require a float position or pressure position due to their function.
- Before working on the hydraulic system
  - Lower the machine
  - Depressurise the hydraulic system
  - Switch off the tractor engine
  - Apply the tractor parking brake
  - Take out the ignition key.
- Have the hydraulic hose line checked at least once a year by a specialist for proper functioning.
- Replace the hydraulic hose line if it is damaged or worn. Only use original AMAZONE hydraulic hose lines.
- The hydraulic hose lines should not be used for longer than six years, including any storage time of maximum two years. Even with proper storage and approved use, hoses and hose connections are subject to natural ageing, thus limiting the length of use. However, it may be possible to specify the length of use from experience values, in particular when taking the risk potential into account. In the case of hoses and hose connections made from thermoplastics, other guide values may be decisive.
- Never attempt to plug leaks in hydraulic lines using your hand or fingers.

  Escaping high pressure fluid (hydraulic fluid) may pass through the skin and ingress into the body, causing serious injuries!

  If you are injured by hydraulic fluid, contact a doctor immediately. Danger of infection.
- When searching for leakage points, use suitable aids, to avoid the serious risk of infection.

2.16.3 Electrical system

- When working on the electrical system, always disconnect the battery (negative terminal).
- Only use the prescribed fuses. If fuses are used that are too highly rated, the electrical system will be destroyed – danger of fire!
- Ensure that the battery is connected correctly - firstly connect the positive terminal and then connect the negative terminal. When disconnecting the battery, disconnect the negative terminal first, followed by the positive terminal.
- Always place the appropriate cover over the positive battery terminal. If there is accidental earth contact, there is a danger of explosion!
- Danger of explosion! Avoid the production of sparks and naked flames in the vicinity of the battery!
- The machine can be equipped with electronic components, the function of which may be influenced by electromagnetic interference from other units. Such interference can pose risks to people, if the following safety information is not followed.
  - In the case of retrofitting of electrical units and/or components on the machine, with a connection to the on-board power supply, the user must check whether the installation might cause faults on the vehicle electronics or other components.
  - Ensure that the retrofitted electrical and electronic components comply with the EMC directive 89/336/EEC in the appropriate version and carry the CE mark.

2.16.4 Attached machines

- Comply with the approved combination options for the attachment equipment on the tractor and the machine drawbar.

  Only couple approved combinations of vehicles (tractor and attached machine).
- In the case of single axle machines, observe the maximum permitted drawbar load of the tractor on the attachment equipment.
- Ensure that the tractor has sufficient steering and braking power.

  Machines connected to a tractor can influence your driving behaviour, as well as the steering and braking power of the tractor, in particular in the case of single axle machines with the drawbar load on the tractor.
- Only a specialist workshop may adjust the height of the drawbar on yoke bars with a drawbar load.

2.16.5 Brake system

- Only specialist workshops or recognised brake service may carry out adjustment and repair work on the brake system.
- Have the brake system checked regularly.
- If there are any functional faults in the brake system, stop the tractor immediately. Have any malfunctions rectified immediately.
- Before performing any work on the braking system, park the machine safely and secure the machine against unintentional lowering and rolling away (wheel chocks)!
- Be particularly careful when carrying out any welding, torch cutting or drilling work in the area of the brake lines.
- After carrying out any adjusting and repair work on the brake system, always carry out a brake test.

Compressed air brake system

- Before coupling the machine, clean any dirt on the sealing rings on the hose couplings of the supply and brake lines.
- Before driving without the machine, lock the hose couplings on the tractor.
- Hang the hose couplings of the machine supply and brake lines in the appropriate empty couplings.
- When filling up or replacing the brake fluid, use the prescribed fluid. When replacing the brake fluid, comply with the appropriate regulations.
- Do not make any changes to the specified settings on the brake valves!
- Replace the air reservoir if:
  - The air reservoir can be moved in the tensioning belts
  - The air reservoir is damaged
  - The rating plate on the air reservoir is rusty, loose or missing.

Hydraulic braking system for export machines

- Hydraulic brake systems are not approved in Germany.
- When filling up or replacing the brake fluid, use the prescribed hydraulic fluids. When replacing the hydraulic fluids, comply with the appropriate regulations.

2.16.6 Tyres

- Repair work on tyres and wheels may only be carried out by specialists with suitable installation tools.
- Check the air pressure at regular intervals.
- Inflate tyres to the specified air pressure! If the air pressure in the tyres is too high, then there is a risk of explosions!
- Park the machine in a safe place and lock the machine against unintentional falling and rolling (parking brake, wheel chocks), before carrying out work on the tyres.
- Tighten or retighten all the fixing screws and nuts in accordance with the specifications of AMAZONEN-WERKE!

2.16.7 PTO shaft operation

- Use only the PTO shafts prescribed by the AMAZONEN-WERKE factories, equipped with the proper safety devices.
- Also read and follow the operating manual from the PTO shaft manufacturer.
- The protective tube and PTO shaft guard must be undamaged, and the shield of the tractor and machine universal joint shaft must be attached and be in proper working condition.
- Work is prohibited while the safety devices are damaged.
- You may install or remove the PTO shaft only after you have done all of the following:
  - Switched off the universal joint shaft
  - Switched off the tractor engine
  - The ignition key has been removed
- Always ensure that the PTO shaft is installed and secured correctly.
- When using wide-angle universal joint shafts, always install the wide angle joint on the machine side!
- Secure the PTO shaft guard by attaching the chain(s) to prevent movement.
- Observe the prescribed pipe overlaps for PTO shafts in transport and working positions. (Read and follow the operating manual from the PTO shaft manufacturer.)
- When turning corners, observe the permitted bending and displacement of the PTO shaft.
- Before switching on the universal joint shaft, check the following:
  - Whether anyone is standing in the machine danger area
  - Whether the selected universal joint shaft speed of the tractor matches the permitted drive speed of the machine
- While work is being done with the universal joint shaft, no one may do the following:
  - Stand in the area of the rotating universal drive or PTO shaft.
  - Stand in the danger area of the machine
- Never switch on the universal joint shaft while the tractor engine is shut off.
- Always switch off the universal joint shaft whenever excessive bending occurs or it is not needed.
- Caution! After the universal joint shaft is switched off, there is a danger of injury from the continued rotation of freewheeling machine parts.

  Do not approach the machine too closely during this time. You may work on the machine only after all machine parts have come to a complete stop.
- You may clean, lubricate or adjust universal joint shaft-driven machines or PTO shafts only if you have done the following:
  - Disengaged the universal joint shaft

  - Switched off the tractor engine
  - The ignition key has been removed
- After uncoupling the PTO shaft, place it on the holder provided.
- After removing the PTO shaft, attach the protective sleeve to the universal joint shaft stub.
- When using the travel-dependent universal joint shaft, note that the universal joint shaft speed depends on the drive speed, and that the direction of rotation reverses when you drive in reverse.

2.16.8 Operation of the seed drill

- Comply with the permitted filling volumes of the seed hopper (seed hopper content).
- When filling the seed hopper, only use the ladder and the loading board.

  It is forbidden to ride on the machine during operation!
- During the calibration test, note the danger points from rotating and oscillating machine parts.
- Do not place any parts in the seed hopper.
- Before transportation, lock the track marker (construction-dependent) in the transport position.

2.16.9 Cleaning, maintenance and repairs

- Only carry out cleaning, maintenance and repair work on the machine when:
  - The drive is switched off
  - The tractor engine is at a standstill
  - The ignition key has been removed
  - The machine's connector has been disconnected from the on-board computer!
- Regularly check the nuts and bolts for a firm seat and retighten them as necessary.
- Secure the raised machine and/or raised machine parts against unintentional lowering before performing any cleaning, maintenance or repair work on the machine!
- When replacing work tools with blades, use suitable tools and gloves.
- Dispose of oils, greases and filters in the appropriate way.
- Disconnect the cable to the tractor generator and battery, before carrying out electrical welding work on the tractor and on attached machines.
- Spare parts must meet at least the specified technical requirements of AMAZONEN-WERKE! This is ensured through the use of original AMAZONE spare parts.

3 Loading and unloading

Loading and unloading with a tractor

WARNING

There is a risk of an accident when the tractor is unsuitable and the machine brake system is not connected to the tractor or is filled.

- Correctly couple the machine to the tractor, before loading the machine onto a transport vehicle or unloading it from a transport vehicle.
- You may only couple and transport the machine with a tractor for loading and unloading, as long as the tractor fulfils the power requirements.

Connect the Cirrus to a suitable tractor for loading onto or unloading off a transport vehicle.

Make the following connections on the tractor

- all service brake connections
- all hydraulic connections
- the free return line of the hydraulic fan connection.

Connection of the AMATRON+ control terminal is not required.

Fig. 15

WARNING

A marshalling person is required for the loading and unloading.

3.1 Loading the Cirrus

1. Put the Cirrus in its transport position.
2. Raise the Cirrus via the integrated running gear up to a middle position.
3. Push the Cirrus carefully backwards onto the transport vehicle.
   A marshalling person is required for loading.

Fig. 16

4. Lower the machine fully as soon as the machine has reached its transport position on the transport vehicle.
5. Apply the machine's parking brake (if fitted).
6. Secure the machine in compliance with regulations.

   Bear in mind that the machine may not be equipped with a parking brake.
7. Disconnect the tractor from the machine.

Fig. 17

In Germany, the permitted total height of the loaded lorry is 4.0 m.

After reaching the transport position on the transport vehicle, the machine can be brought to the permitted transport height by lowering the rotary cultivator.

To lower the rotary cultivator, you have to connect the pressureless return flow to the tractor.

3.1.1 Lowering the rotary cultivator onto the transport vehicle

After reaching the transport position on the transport vehicle, the machine can be brought to the permitted transport height by lowering the rotary cultivator.

To lower the rotary cultivator, you have to connect the pressureless return flow to the tractor.

Fig. 18

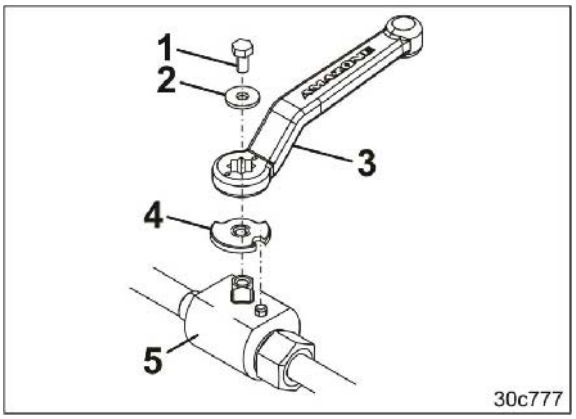

Fig. 19

1. Load the machine onto the transport vehicle.
2. Remove the guard plate (Fig. 19/4) that holds the valve handle (Fig. 18/1) in place.
   - 2.1 Unscrew the screw (Fig. 19/1).
   - 2.2 Remove the disc (Fig. 19/2).
   - 2.3 Pull off the handle (Fig. 19/3).
   - 2.4 Remove the guard plate (Fig. 19/4).
   - 2.5 Fasten the valve handle (Fig. 19/3) in reverse sequence without guard plate (Fig. 19/4) on the valve (Fig. 19/5).

DANGER

Direct people out of the danger area.

3. Direct people out of the danger area.
4. Turn the valve handle (Fig. 20/1) slowly in the direction of the arrow.

→ The valve (Fig. 20/2) opens.

→ The rotary cultivator is lowered.

5. Turn the valve handle into closing position, opposite to the direction of the arrow.

→ The valve is closed.

→ Figure (Fig. 18) shows the position of the valve handle when the valve is closed.

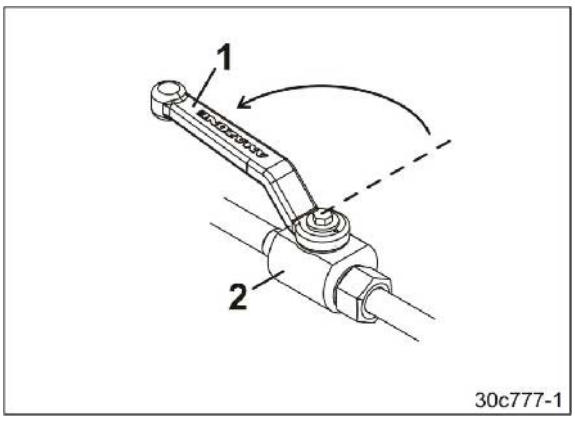

Fig. 20

6. Install the guard plate (Fig. 21/1).

Plug the round recess of the circlip (Fig. 21/1) onto the pin (see arrow).

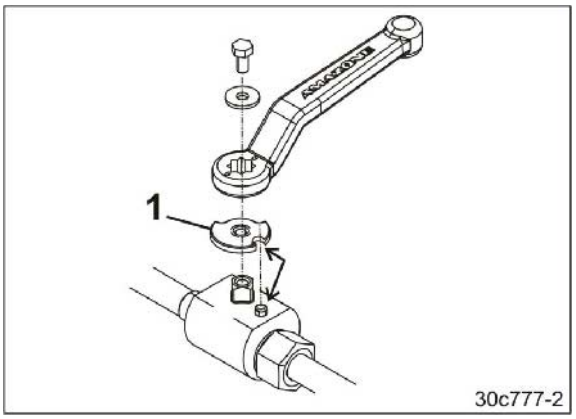

Fig. 21

3.2 Unloading the Cirrus

1. Couple the Cirrus to the tractor.
2. Remove the transport securing device.
3. Release the machine's parking brake (if fitted).
4. Raise the Cirrus via the integrated running gear up to a middle position and pull it carefully off the transport vehicle.
   A marshalling person is required for unloading.
5. After unloading uncouple the machine from the tractor.

4 Product description

This section:

- Provides a comprehensive overview of the machine structure.
- Provides the names of the individual modules and controls.

Read this section when actually at the machine. This helps you to understand the machine better.

Main assemblies of the machine

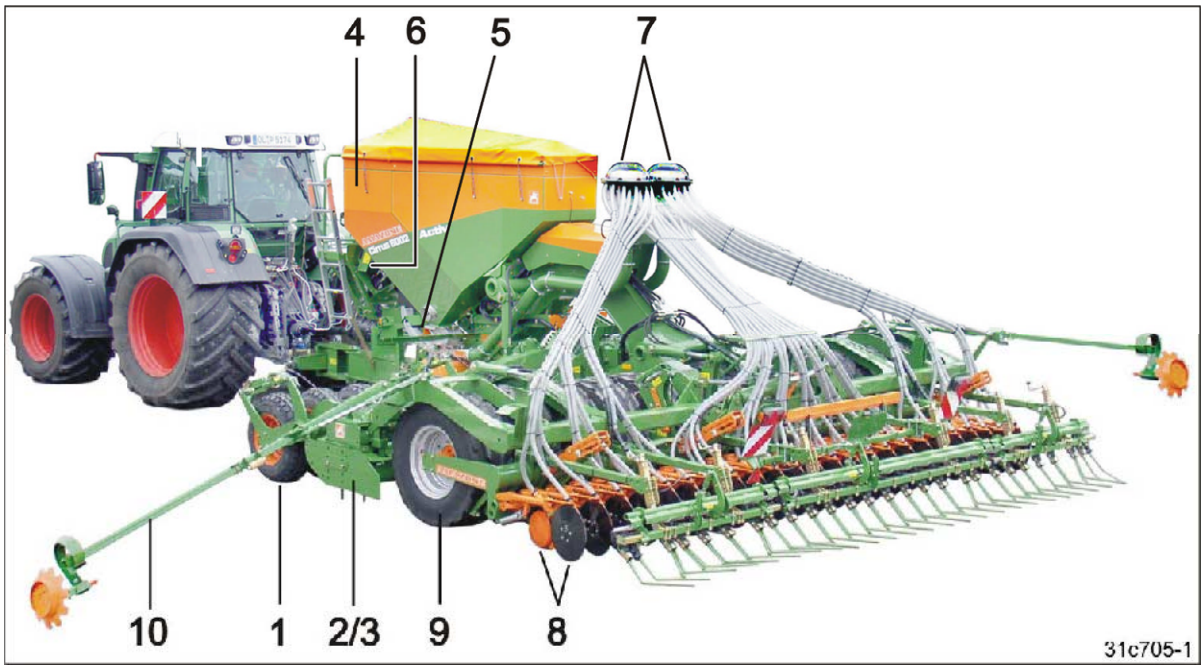

Fig. 22

Fig. 22/…

(1) Leading roller

(2) Rotary cultivator

(3) Side panel

(4) Seed hopper

(5) Seed dosing unit

(6) Blower fan

(7) Seed distributor head

(8) RoTeC+ coulter

(9) Wedge ring tyres with integrated running gear

(10) Track marker

4.1 Overview of subassemblies

Fig. 23/...

AMATRON+ control terminal

Fig. 23

Fig. 24/...

(1) Draw rail

(2) Stand, foldable

(3) PTO shaft

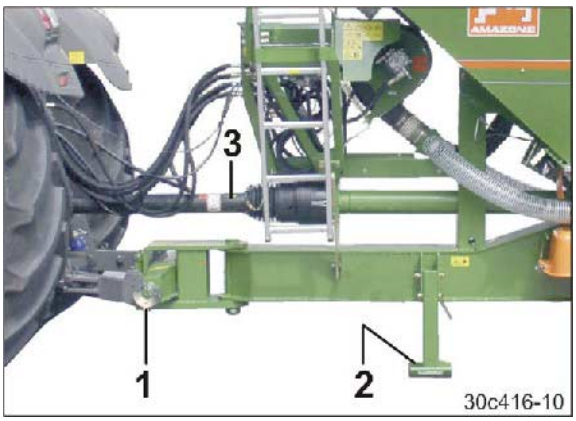

Fig. 24

Fig. 25/...

(1) Mounting for supply lines

(2) Roller holder for stowing

- of the operating manual
- of the dosing rollers
- of the digital scales.

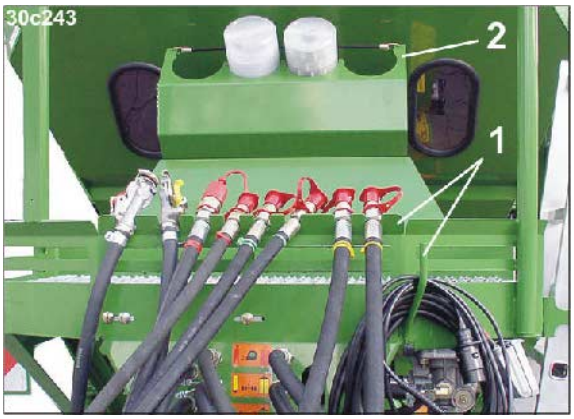

Fig. 25

Fig. 26/…

(1) Soil tillage tines

(2) Levelling bar, height-adjustable

Fig. 26

Fig. 27/…

(1) Three-gear transmission

(2) Angular gearbox

(3) PTO shaft with overload safety

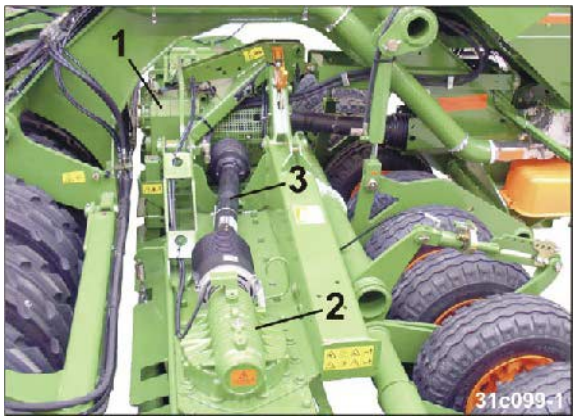

Fig. 27

Fig. 28/...

Segment

- To adjust the normal working depth
- To preset the hydraulic adjustable working depth during work

Fig. 28

Fig. 29/...

(1) Wheel chocks in transport bracket

(2) Loading board with ladder

(3) Holding point

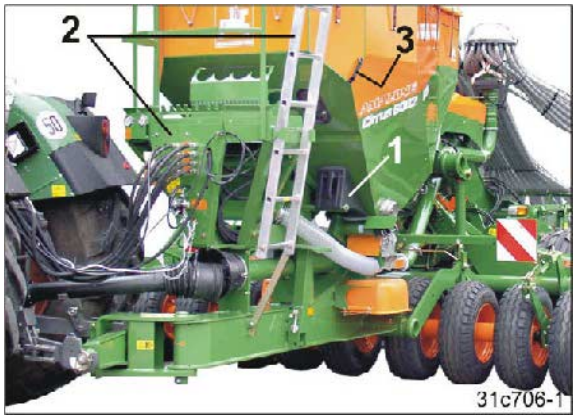

Fig. 29

Fig. 30/...

(1) Swivel cover

(2) Cover hook

Fig. 30

Fig. 31/...

(1) Seed dosing unit

(2) Injector housing

(3) Calibration trough
(in mounting for calibration test)

(4) Shutter for closing the emptying opening of the seed hopper

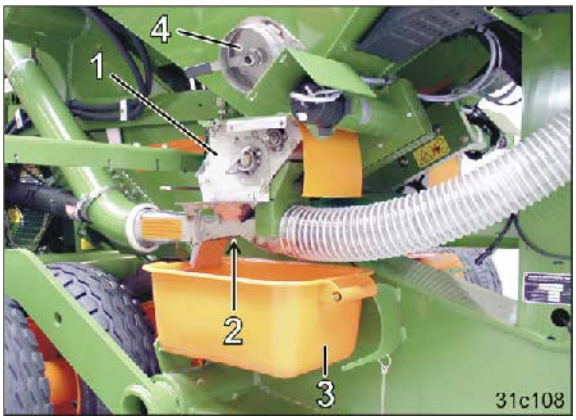

Fig. 31

Fig. 32/...

(1) Electric motor
(with the "Full dosing" equipment, one electric motor powers each seed dosing unit)

Fig. 32

Fig. 33/...

(1) Sieve grate

(2) Level sensor

Fig. 33

Fig. 34/...

Tramline marker

Fig. 34

Fig. 35/...

RoTeC+ coulter

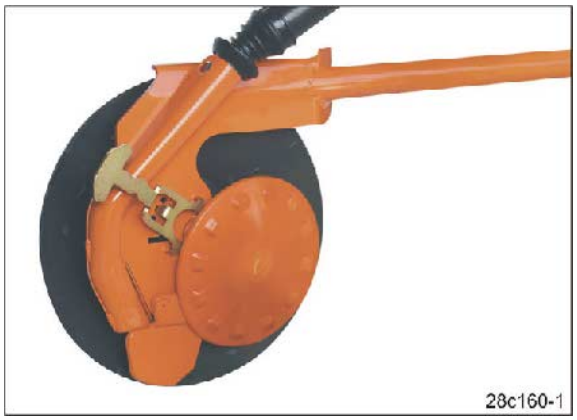

Fig. 35

Fig. 36/...

(1) Electrohydraulic control block

(2) Hydraulic accumulator with nitrogen filling for pretensioning the outswung machine extension arms

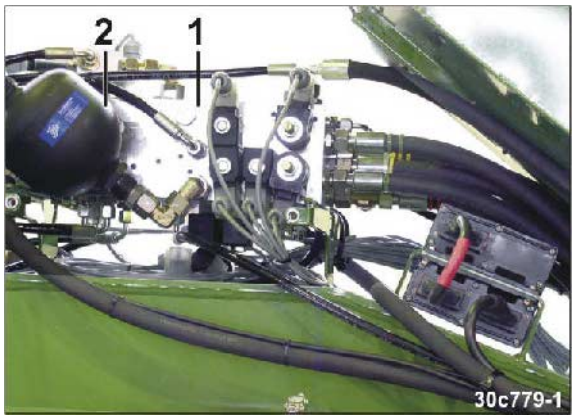

Fig. 36

Fig. 36/...

(1) Radar

Fig. 37

4.2 Safety and protection equipment

Fig. 38/…

(1) PTO shaft guard

Fig. 38

Fig. 39/…

(1) Side panel

(2) Levelling bar

(3) Tool guard plate, front and rear

(4) Leading roller

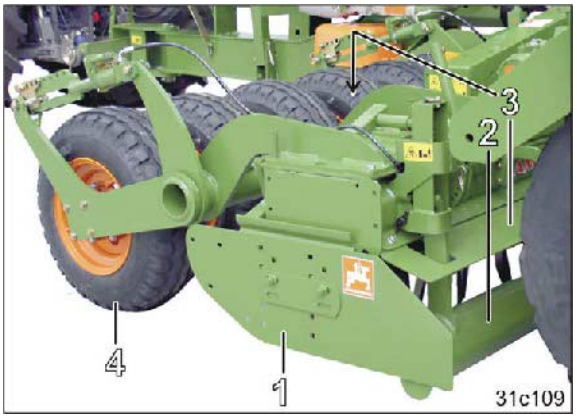

Fig. 39

Fig. 40/...

(1) Fan guard

Fig. 40

Fig. 41/...

(1) Sieve grate lock
(for full dosing)

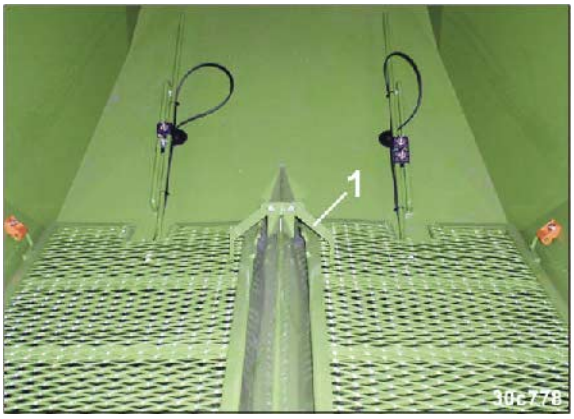

Fig. 41

Fig. 42/...

(1) Dosing window lock
(for full dosing).
The roller drive cuts out when the dosing window (Fig. 42/2) opens.

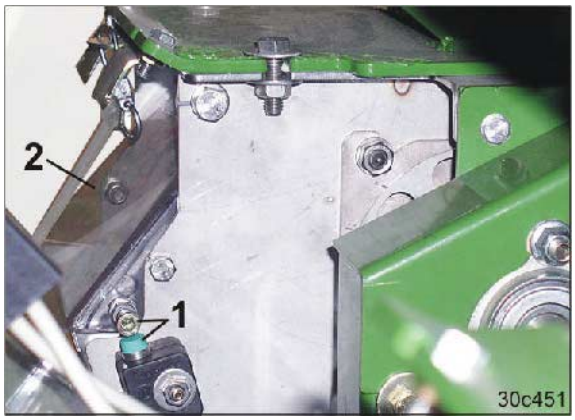

Fig. 42

Fig. 43/...

(1) Pin with tube clip.
Mechanical lock of the raised, folded-out machine during maintenance work.

Fig. 43

Fig. 44/...

(1) Hydro reservoir with nitrogen filling brakes the machine if it is separated from the tractor due to an accident (machines with hydraulic service brake only)

Fig. 44

4.3 Overview – Supply lines between the tractor and the machine

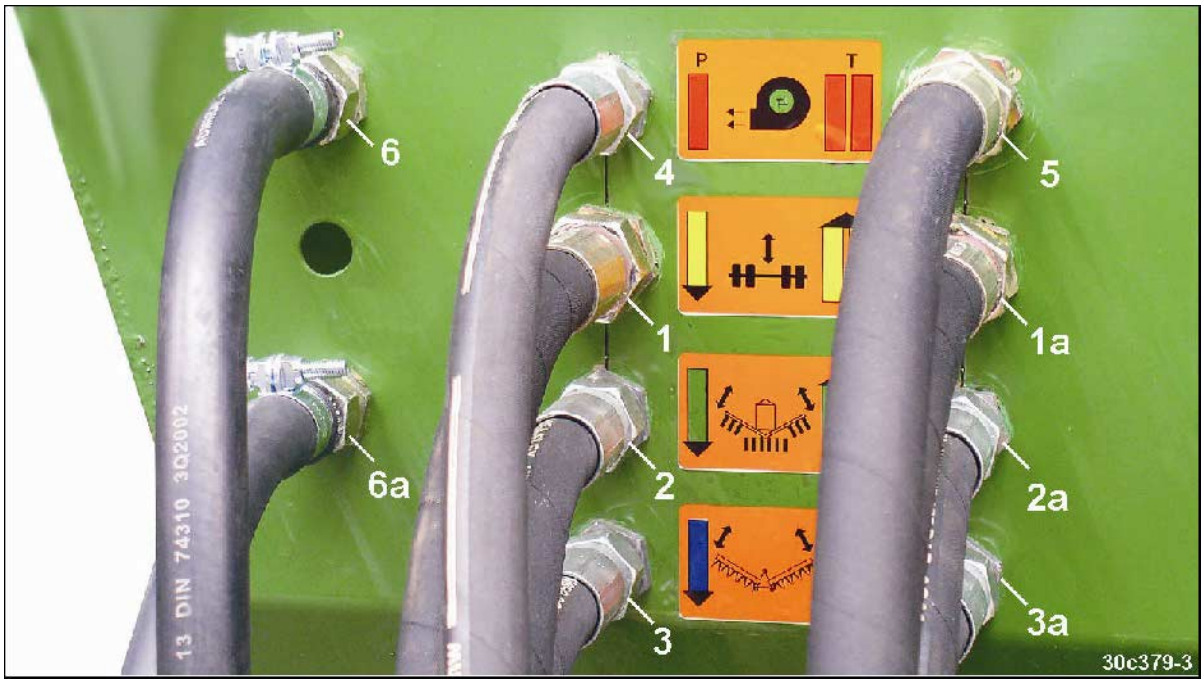

Fig. 45

Tractor-side			Machine-side (Cirrus Activ)						
			Fig. 45/…		Running direction	Marking			Function
Tractor control unit	1	Double-acting	Hydraulic line	(1)	Feed line	Cable tie	1	Yellow	o Lifting/lowering the rotary cultivator o Lifting/lowering the integrated running gear o Actuating the track marker o Actuating the pre-emergence marker
				(1a)	Return line		2		
	2	Double-acting		(2)	Feed line		1	green	o Folding the machine extension arms o Adjusting the exact harrow / coulter pressure
				(2a)	Return line		2		
	3	Double-acting		(3)	Feed line		1	Blue	o Folding the rotary cultivator o Hydr. working depth adjustment of rotary cultivator
				(3a)	Return line		2		
	4	Single-acting or double-acting		(4)	Feed line [1]		1	Red	Hydraulic fan motor
Pressureless line				(5)	Return line [2]		2		

[1] Pressure line with priority

[2] Pressureless line.

Fig. 45/…	Designation	Marking	Function
(6)	Brake line	Yellow	Dual-circuit pneumatic braking system
(6a)	Supply line	Red	
No Fig.	Machine connector		AMATRON+ on-board computer
No Fig.	Plug (7-pin)		Road traffic lighting system
No Fig.	Hydraulic brake line		Hydraulic braking system [1]

[1] not permitted in Germany and some other EU countries

4.4 Transportation equipment

Fig. 46/...

(1) 2 rear-facing warning signs

(2) 1 speed sign

(3) 1 road safety bar, 2-part
(required for machines with exact harrow)

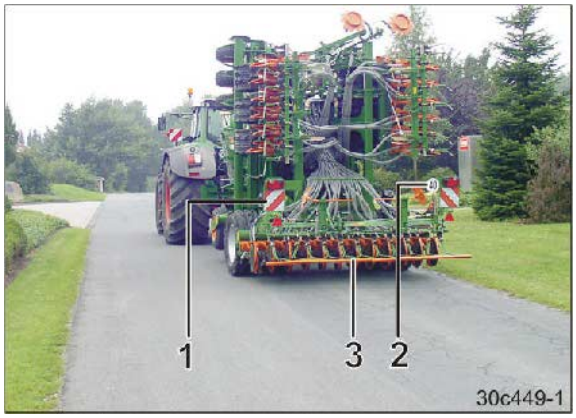

Fig. 46

Fig. 47/...

(1) 2 rear-facing
turn signals

(2) 2 reflectors, yellow.

(3) 2 brake and tail lamps

(4) 2 red reflectors

(5) 2 Reflectors, triangular

(6) 1 licence plate holder

(7) 1 light for licence plate

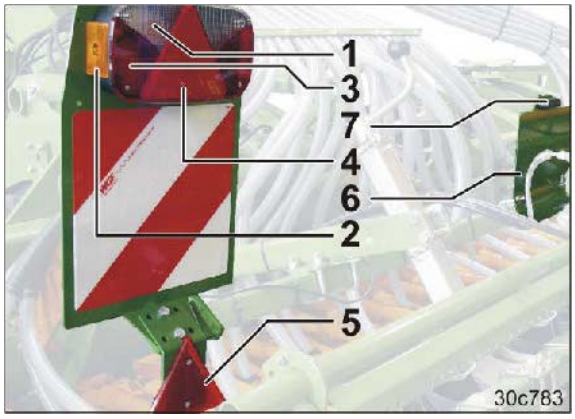

Fig. 47

Fig. 48/...

(1) 2 forwards-facing warning signs

Fig. 48

Fig. 49/...

(1) 2 side lights pointing forwards

(2) 2 forwards-facing turn signals

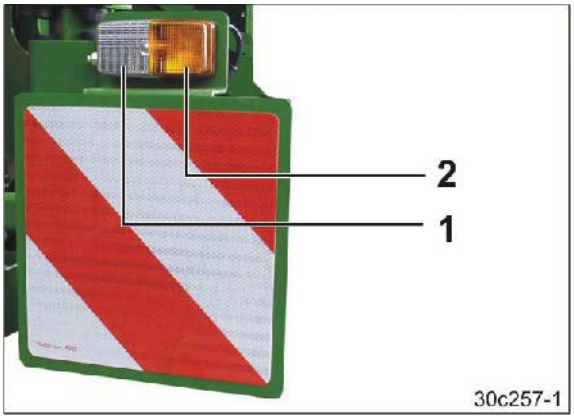

Fig. 49

Fig. 50/...

(1) 2 x 3 reflectors, yellow,
(laterally with a max. spacing of 3 m)

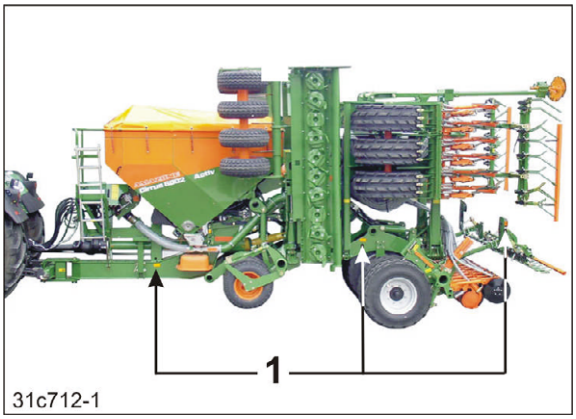

Fig. 50

4.5 Intended use

The machine

- is constructed for the seedbed preparation of agriculturally used arable land and for the dosing and output of commonly available seeds.
- This is coupled to the tractor using the lower tractor line and is operated by an additional person.
- May be used only with leading roller, installed side panels and with installed levelling bar.

Slopes can be travelled

- Along the contours

Direction of travel to left	10 %
Direction of travel to right	10 %

- Along the gradient

Up the slope	10 %
Down the slope	10 %

The intended use also includes:

- Compliance with all the instructions in this operating manual.
- Execution of inspection and maintenance work.
- Exclusive use of original AMAZONE spare parts.

Other uses to those specified above are forbidden and shall be considered as improper.

For any damage resulting from improper use:

- the operator bears the sole responsibility,
- AMAZONEN-WERKE assumes no liability whatsoever.

4.6 Danger area and danger points

The danger area is the area around the machine in which people can be caught:

- By work movements made by the machine and its tools
- By materials or foreign bodies thrown out of the machine
- By tools rising or falling unintentionally
- By unintentional rolling of the tractor and the machine

Within the machine danger area, there are danger points with permanent or unexpected risks. Warning pictograms indicate these danger points and warn against residual dangers, which cannot be eliminated for construction reasons. Here, the special safety regulations of the appropriate section shall be valid.

No-one may stand in the machine danger area:

- as long as the tractor engine is running with a connected PTO shaft / hydraulic system.
- as long as the tractor and machine are not protected against unintentional start-up and running.

The operating person may only move the machine or switch or drive the tools from the transport position to the working position or vice-versa when there is no-one in the machine danger area.

Danger points exist:

- Between the tractor and the machine, particularly during coupling and uncoupling operations.
- In the area of moving parts.
  - In the area of the swivelling machine extension arm.
  - In the area of the swivelling rotary cultivator.
  - In the area of the swivelling wedge ring tyres.
  - In the area of the swivelling track markers.
- Underneath raised, unsecured machines or parts of machines.
- By climbing onto the machine.

4.7 Rating plate and CE mark

The following illustrations show the arrangement of the rating plate (Fig. 51/1) and of the CE mark (Fig. 51/2).

The rating plate shows:

- Vehicle ID No.
  (machine ID No.)
- Type
- Year of manufacture
- Basic weight, kg
- Perm. laden weight, kg
- Perm. axle load, front / support load, kg.
- Perm. axle load, kg
- Permissible system pressure, bar
- Factory

The CE mark on the machine indicates compliance with the stipulations of the valid EU directives.

Fig. 51

Fig. 52

4.8 Technical data

			Cirrus 6002 Activ
Working width		[m]	6.0
Total length [1]		[m]	8.35
Filling height	without extension	[mm]	2650
	with extension		2840
Hopper volume	without extension	[l]	3000
	with extension		3600
Payload (on the field)	without extension	[kg]	2400
	with extension		2900
Number of sowing units			48
Row spacing		[cm]	12.5
Continuous acoustic pressure level		[dB(A)]	71
Working speed		[km/h]	10 to 14
Ground coverage		[ha/h]	approx. 4.8
Power requirement (from)		[kW/bhp]	206/280
Oil flow rate (minimum)		[l/min]	80
Hydraulics, maximum working pressure		[bar]	200
Electrical system		[V]	12 (7-pin)
Transmission/hydraulic fluid			Transmission/hydraulic fluid Utto SAE 80W API GL4
Tractor mount category (as required)			Cat. III, Cat. IV
Transport running gear			Integrated with 4 running wheels
Number of wedge ring tyres			12
Maximum drawbar load with full seed hopper (on the field)	without extension	[kg]	3300
	with extension		3600
Service brake system (connection to tractor)			Dual-circuit pneumatic braking system Or: Hydraulic braking system [2]

Rotary cultivator	Number of rotors	[number]	20
	Tines		Griff Super
	Length of the soil tillage tines	[cm]	30
	Max. working depth	[cm]	20

[1] with exact harrow, without tramline marker
[2] Not allowed in Germany and in several other countries.

Road transport data (only with an empty seed hopper)

		Cirrus 6002 Activ
Transport width	[m]	3.0
Total height in transport position	[mm]	3980
Empty weight (basic weight)	[kg]	11600
Permissible total weight	[kg]	12000
Permissible rear axle load	[kg]	10000
Perm. drawbar load (F_H) when driving on the road (see rating plate)	[kg]	2300
Maximum payload for transport journeys	[kg]	220
Perm. maximum speed on all non-public roads, public roads and public ways.	[km/h]	40

4.9 Conformity

The machine fulfils the

Directives / standards

- Machines directive 06/42/EG
- EMC directive 04/108/EG

4.10 Necessary tractor equipment

For operation of the machine in compliance with the intended use the tractor must fulfil the following requirements.

Tractor engine power

Cirrus 6002 Activ — from 206 kW (280 bhp) upwards

Electrical system

Battery voltage: 12 V (volts)

Lighting socket: 7-pin

Hydraulic system

Maximum operating pressure:	200 bar
Tractor pump power:	At least 80 l/min at 150 bar
Machine hydraulic fluid:	Transmission/hydraulic fluid Utto SAE 80W API GL4
	The machine hydraulic/transmission fluid is suitable for the combined hydraulic/transmission fluid circuits of all standard makes of tractor.
Control unit 1:	Double-acting control unit
Control unit 2:	Double-acting control unit
Control unit 3:	Double-acting control unit
Control unit 4:	1 single-acting or double-acting control unit with priority control for the feed line

1 unpressurised return line with a large push-fit coupling (ND 16) for the pressure-free oil return flow. In the return line the banking-up pressure must be 10 bar at the maximum.

Operational brake system

Dual-circuit service braking system:

- 1 hose coupling (red) for the supply line
- 1 hose coupling (yellow) for the brake line

Hydraulic braking system: 1 hydraulic coupling in accordance with ISO 5676

The hydraulic braking system is not allowed in Germany and several other EU countries!

4.11 Noise production data

The workplace-related emission value (acoustic pressure level) is 76 dB(A), measured in operating condition at the ear of the tractor driver with the cabin closed.

Measuring unit: OPTAC SLM 5.

The noise level is primarily dependent on the vehicle used.

5 Structure and function

The following section provides information on the machine structure and the functions of the individual components.

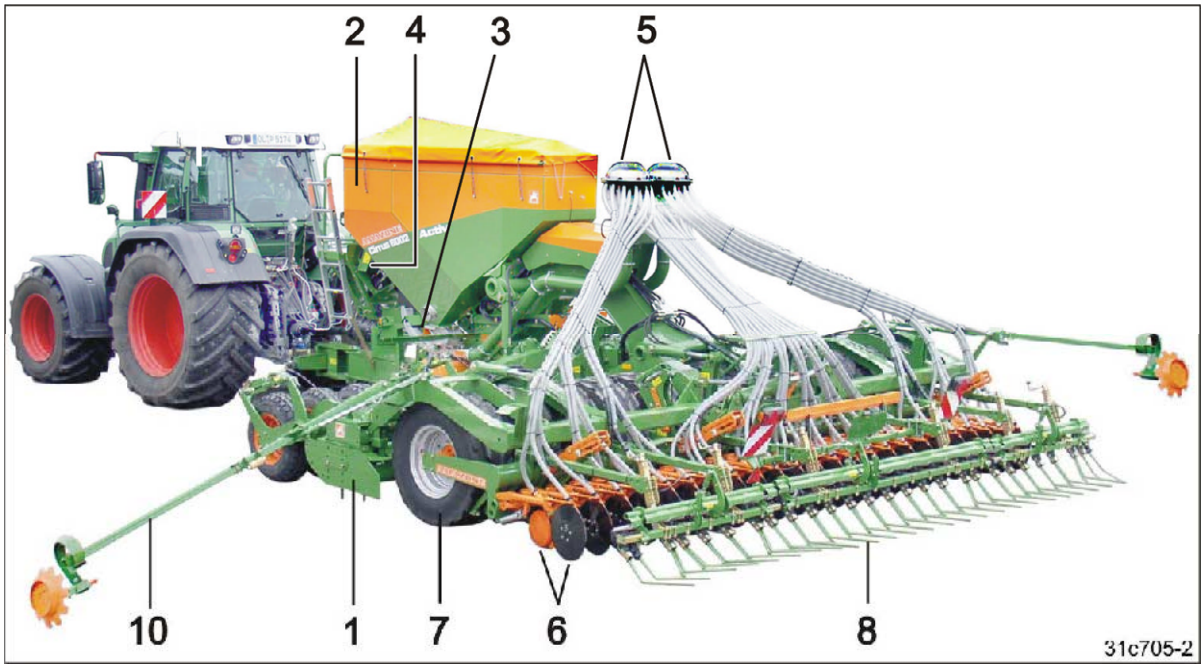

Fig. 53

With the **Cirrus Activ**, mulch sowing and conventional plough seeding are possible.

The rotary cultivator (Fig. 53/1) prepares the field for sowing:

- Following a plough, chisel cultivator or deep ripper or
- Without pre-tilling

The seed is carried in the seed hopper (Fig. 53/2).

From the seed dosing unit (Fig. 53/3), the configured seed volume in the injector sluice reaches the air current generated by the blower fan (Fig. 53/4).

The air stream conveys the seed to the distributor head (Fig. 53/5), which distributes the seed uniformly onto all the coulters (Fig. 53/6) of a machine half.

One seed dosing unit and one distributor head always supply one machine half with seed.

The seed dosing units are driven by electric motors. The rotational drive speed of the dosing rollers is determined by the working speed and the preset sowing rate. The AMATRON+ on-board computer measures the working speed and the distance from the impulses of the radar.

The seed is embedded into the strips in the soil, compacted in strips by the wedge ring tyres (Fig. 53/7) and covered with loose soil by the exact harrow (Fig. 53/8). If required, the seed pressure roller beam with the adjustable drag tines can be used.

The track markers (Fig. 53/10) mark the field connection run in the centre of the tractor.

For road transport, the Cirrus folds together to a transport width of 3 m.

5.1 Electrohydraulic control blocks

The hydraulic functions of the machine are actuated via the electrohydraulic control blocks.

Initially, the desired hydraulic function has to be selected on the AMATRON+ before the hydraulic function can be executed via the appropriate control unit.

This switching clear of the hydraulic functions in the AMATRON+ allows operation of all hydraulic functions with only:

- 3 tractor control units for the machine functions
- 1 tractor control unit for the blower fan.

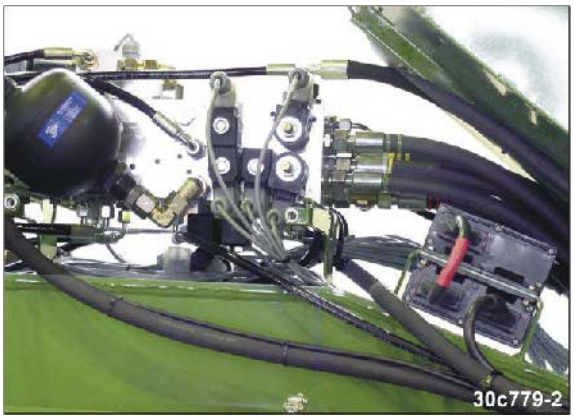

Fig. 54

5.2 Hydraulic hose lines

WARNING

Danger of infection from escaping hydraulic fluid at high pressure!

When coupling and uncoupling the hydraulic hose lines, ensure that the hydraulic system is depressurised on both the machine and tractor sides.

If you are injured by hydraulic fluid, contact a doctor immediately.

5.2.1 Coupling the hydraulic hose lines

WARNING

Risk of contusions, cutting, catching, drawing in and knocks from faulty hydraulic functions when the hydraulic hose lines are connected incorrectly!

When coupling the hydraulic hose lines, observe the coloured markings on the hydraulic plugs.

- Check the compatibility of the hydraulic fluids before connecting the machine to the hydraulic system of the tractor.
  Do not mix any mineral oils with biological oils.
- Observe the maximum approved hydraulic fluid pressure of 200 bar.
- Only couple clean hydraulic connectors.
- Push the hydraulic push-fit connector(s) into the hydraulic sockets until the hydraulic connector(s) perceivably lock(s).
- Check the coupling points of the hydraulic hose lines for a correct, tight seat.

1. Swivel the actuation lever on the control valve on the tractor to float position (neutral position).
2. Clean the hydraulic connectors of the hydraulic hose lines before you couple the hydraulic hose lines to the tractor.
3. Connect the hydraulic hose line(s) to the tractor control unit(s).

Fig. 55

5.2.2 Uncoupling the hydraulic hose lines

1. Swivel the actuation lever on the control valve on the tractor to float position (neutral position).
2. Unlock the hydraulic connectors from the hydraulic sockets.
3. Safeguard the hydraulic connectors and hydraulic connector sockets against soiling with the dust protection caps.
4. Place the hydraulic hose lines in the hose cabinet.

Fig. 56

5.3 Dual-circuit pneumatic braking system

In Germany, the Cirrus is equipped with a dual-circuit pneumatic braking system.

The dual-circuit pneumatic braking system controls two brake cylinders, which actuate the brake shoes in the brake drums.

The tractor also has to be equipped with a dual-circuit pneumatic braking system.

The dual-circuit pneumatic braking system has:

- A supply line (Fig. 57/1) with coupling head (red)
- A brake line (Fig. 57/2) with coupling head (yellow)

Fig. 57

When the tractor brake pedal and the tractor parking brake are actuated, the service brake system of the machine is activated.

If the supply line (red) is disconnected from the tractor, the service brake system automatically controls the machine (emergency brake).

When the supply line (red) is coupled to the tractor, the emergency brake is released automatically as soon as the operating pressure has built up and the parking brake of the tractor is released.

Compliance with the maintenance intervals is essential for the correct function of the brake system.

5.3.1 Coupling the brake and supply lines

WARNING

Risk of contusions, cuts, dragging, catching or knocks from incorrectly functioning brake system.

- When coupling the brake and supply line, ensure that:
  - the sealing rings of the hose couplings are clean
  - the sealing rings of the hose couplings form a proper seal.
- Always replace damaged seals immediately.

WARNING

Risk of contusions, cuts, dragging, catching or knocks from unintentionally rolling machine with the operating brake released!

Always couple the hose coupling of the brake line (yellow) first, followed by the hose coupling of the supply line (red).

The operating brake of the machine moves out of the brake position immediately the red hose coupling has been coupled.

1. Apply the tractor parking brake, switch off the tractor engine and remove the ignition key.
2. Open the covers (Fig. 58/1) of the hose couplings on the tractor.
3. Check the sealing rings on the hose coupling for damage and cleanliness.
4. Clean the dirty sealing rings and replace any damaged sealing rings.
5. Fasten the hose coupling of the brake line (yellow) in compliance with regulations in the coupling marked yellow (Fig. 58/2) on the tractor.

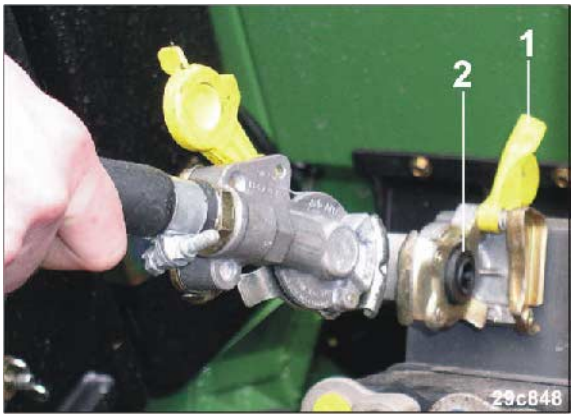

Fig. 58

6. Remove the hose coupling of the supply line (red) from the empty coupling.
7. Check the sealing rings on the hose coupling for damage and cleanliness.
8. Clean the dirty sealing rings and replace any damaged sealing rings.
9. Fasten the hose coupling of the supply line (red) in the coupling marked red on the tractor in accordance with regulations.

→ The black button (Fig. 59/1) is pushed out automatically when the supply line (red) is coupled.

If the tractor parking brake is:

- Engaged, the service brake of the machine is also engaged.
- Released, the service brake of the machine is also released.

DANGER

In an emergency, pull the red button (Fig. 59/2) to brake the Cirrus.

The Cirrus does not have any braking effect if the tractor parking brake is released when the supply line (red) is connected.

Fig. 59

5.3.2 Uncoupling the supply and brake line

DANGER

Always secure the machine with the wheel chocks before you uncouple the machine from the tractor!

WARNING

Risk of contusions, cuts, dragging, catching or knocks from unintentionally rolling machine with the operating brake released!

Always uncouple the hose coupling of the supply line (red) first followed by the hose coupling of the brake line (yellow).

When the supply line (red) is uncoupled from the tractor, the service brake of the machine moves to braking position.

Always keep to this order, as otherwise the operating brake system will trip and may set the unbraked machine moving.

1. Secure the machine against unintentionally rolling away. To do so, use the tractor parking brake and the wheel chocks.
2. Release the hose coupling (Fig. 60) of the supply line (red).
3. Release the hose coupling of the brake line (yellow).
4. Fasten the hose couplings in the empty coupling points.
5. Close the covers of the coupling heads on the tractor.

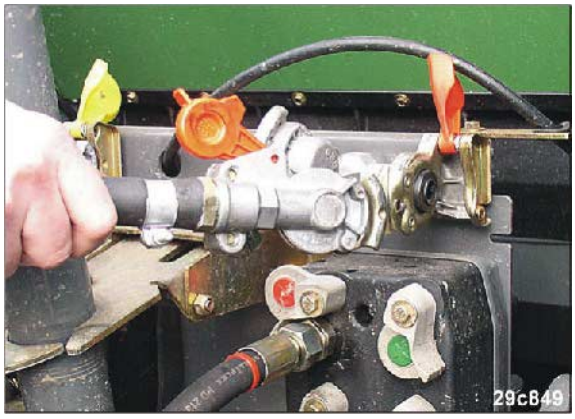

Fig. 60

5.3.3 Control elements of the dual-circuit pneumatic braking system

DANGER

Never release the parking brake of the uncoupled machine on sloping ground.

After the supply line (red) is detached from the tractor, the Cirrus is braked automatically.

If it is necessary to manoeuvre the machine while it is uncoupled from the machine (on a level surface only), e.g. while it is in the workshop, you can actuate the dual-circuit pneumatic braking system using the control elements (Fig. 61).

For this purpose, the compressed air tank must be filled. If the compressed air tank is empty, the parking brake cannot be disengaged using the control elements (for more information, refer to Figure [Fig. 62]).

Releasing the parking brake:
Push in the black button (Fig. 61/1),
e.g. to manoeuvre the uncoupled machine on level ground.

Engaging the parking brake:
Pull out the black button (Fig. 61/1).

Do not press the red button (Fig. 61/2).
It is always pulled out.

Fig. 61

If the machine is uncoupled from the tractor, the compressed air tank must be filled so that the parking brake can be released using the control elements (Fig. 61).

If the compressed air tank is empty, the parking brake can also be disengaged using the threaded rod (Fig. 62/1).

If it is necessary to manoeuvre the machine while it is uncoupled from the machine with the pressure tank empty (on a level surface only), e.g. while it is in the workshop, insert the threaded rod into the tri-stop cylinder. Pull the piston upwards by rotating the nut (Fig. 62/1).

The illustration (Fig. 62) shows the released parking brake.

Fig. 62

Before connecting the machine to the tractor, park the threaded rod (Fig. 63/1) in the holder (Fig. 63/2).

Fig. 63

5.4 Hydraulic operating brake system

The Cirrus can be equipped with a hydraulic service brake system. The hydraulic service brake system is not allowed in Germany and a few other EU countries.

The hydraulic service brake system controls two brake cylinders, which actuate the brake shoes in the brake drums.

The tractor also has to be equipped with a hydraulic braking system.

Actuate the parking brake using the crank.

Engaging the parking brake:

Turn the crank towards the right

Releasing the parking brake:

Turn the crank towards the left

Fig. 64

After using the crank (Fig. 65/1), fasten it in the transport bracket.

Secure the crank using a lynch pin (Fig. 65/2)

Fig. 65

CAUTION

Engage the parking brake before uncoupling the machine and do not disengage it until after coupling the machine to the tractor.

Compliance with the maintenance intervals is essential for the correct function of the brake system.

5.4.1 Coupling the hydraulic service brake system

1. Apply the parking brake (see Fig. 64).
2. Couple the tractor and machine.

3. Remove the protective cap (Fig. 70/1).
4. If necessary, clean the hydraulic socket (Fig. 66) and/or the tractor-side hydraulic connector.
5. Couple the hydraulic socket and hydraulic connector.

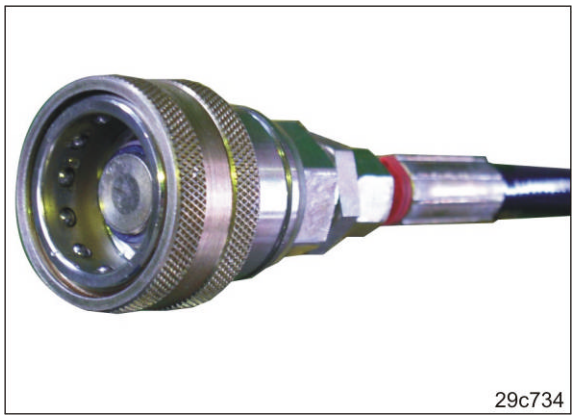

Fig. 66

Couple only clean hydraulic sockets (Fig. 66) and hydraulic connectors.

DANGER

Check the routing of the brake line. The brake line must not chafe on foreign parts.

7. Release the parking brake (see Fig. 64).

8. Connect the break-away valve to the tractor via the cable (Fig. 67/1). If the machine is separated from the tractor due to an accident, the machine is braked.

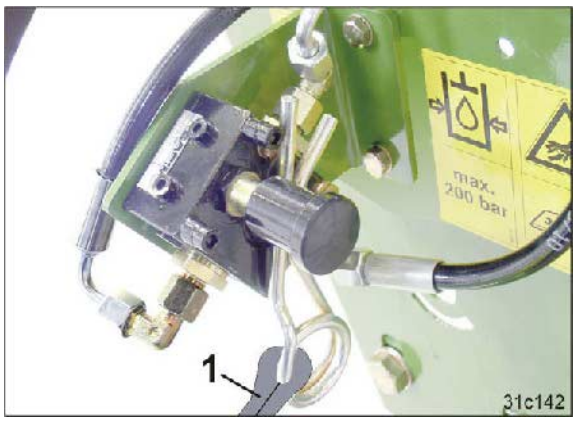

Fig. 67

9. Fill the hydro reservoir (Fig. 68/1) before moving off.

   9.1 Press the brake pedal of the tractor for at least 10 seconds.
   This fills the hydro reservoir.

> To ensure the full effectiveness of the service brake system, fill the hydro reservoir before moving off.

Fig. 68

5.4.2 Uncoupling the hydraulic service brake system

1. Drain the hydro reservoir (Fig. 68/1) before uncoupling the hydraulic socket (Fig. 70).

   1.1 Actuate the valve (Fig. 69/1).
   This drains the hydro reservoir.

> The hydraulic socket (Fig. 70) cannot be coupled to the tractor again unless the hydro reservoir is empty.

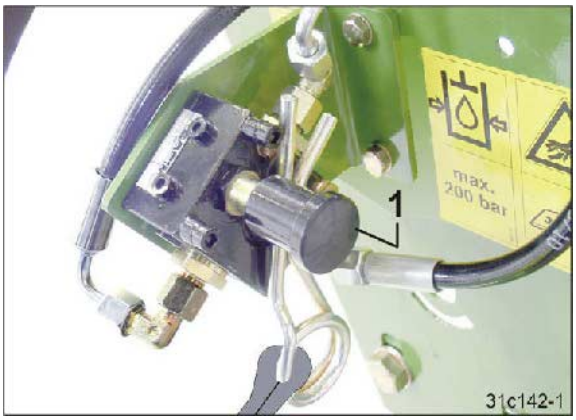

Fig. 69

2. Apply the parking brake (see Fig. 64).
3. Uncouple the hydraulic socket.
4. Secure the hydraulic socket and hydraulic connector with protective caps (Fig. 70/1) against soiling.
5. Place the hydraulic line in the holder for the supply lines.

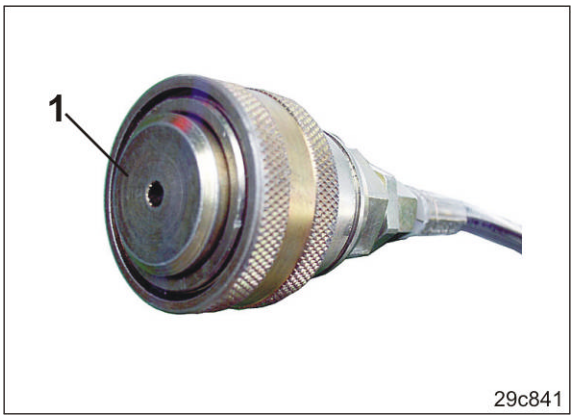

Fig. 70

5.5 AMATRON+ control terminal

The AMATRON+ consists of the control terminal (Fig. 71), the basic equipment (cable and fastening materials) and the job computer on the machine.

Fasten the control terminal in the tractor cab according to the AMATRON+ operating manual.

Fig. 71

The following are carried out via the operator control terminal (Fig. 71):

- input of the machine-specific data
- input of the job-related data
- control of the machine to change the sowing rate during sowing operation
  (electronic seed rate adjustment is necessary)
- switching clear of the hydraulic functions before the hydraulic functions can be executed via the appropriate control unit
- monitoring of the seed drill during sowing operation.

The AMATRON+ measures:

- The current forward speed [km/h]
- The current sowing rate [kg/ha]
- The distance [m] remaining until the seed hopper is emptied of seed
- The actual seed hopper content [kg]

Once a job has been started, the AMATRON+ stores:

- the day and total seed volume output [kg]
- the day and total area cultivated [ha]
- the day and total sowing time [h]
- the average work performance [ha/h]

The AMATRON+ sends an alarm if the rotary cultivator tool carriers are not moving or if one or both ratchet clutches shut off.

For communication purposes the AMATRON+ includes

- the menu "Work"
- the main menu with 4 submenus

- the menu "Job"
- the menu "Seed drill calibration"
- the menu "Machine data"
- the menu "Setup".

the menu "Work"

- indicates the required data for sowing operation
- is for the purpose of operating the seed drill during work.

In the menu "Job"

- the sowing rate is entered
- jobs are created and the data determined from up to 20 processed jobs is stored
- the desired job is started.

In the menu "Seed drill calibration"

- the sowing rate entered is checked by way of a calibration test and the transmission setting is corrected as necessary (optional).

In the menu "Machine data"

- the machine-specific settings are entered, selected or determined via a calibration process.

In the menu "Setup"

- the input and output of diagnostic data and the selection and input of basic machine data is performed. These jobs are reserved exclusively for customer service personnel.

5.6 PTO shaft

The PTO shaft transmits the drive power to the machine.

WARNING

Danger of crushing from tractor and machine unintentionally starting up or rolling away!

Couple or uncouple the PTO shaft to/from the tractor only when tractor and machine have been secured against both unintentional starting and unintentional rolling away.

WARNING

Danger of being entangled and drawn in by an unguarded PTO shaft or damaged safety devices!

- Never use the PTO shaft if the safety device is missing or damaged, or without correctly using the supporting chain.
- Before each use, check that all safety devices of the PTO shaft are installed and fully functional.
- Attach the supporting chains (does not apply to PTO shaft with full guard) in such a way as to ensure sufficient swivelling range in all operating positions. Supporting chains must not become caught on machine or tractor parts.
- Have any damaged or missing parts of the PTO shaft replaced immediately with OEM parts from the PTO shaft manufacturer.

  Note that only specialised workshops may repair PTO shafts.

WARNING

Danger of becoming entangled and drawn in by unguarded parts of the PTO shaft!

These risks pose serious injuries or death.

Work only when the drive between the tractor and driven machine is fully guarded, i.e.:

- The tractor must be equipped with a shield, and the machine must be equipped with a PTO shaft guard.
- The safety devices and guards of the extended PTO shaft must overlap by at least 50 mm.

Otherwise, do not use the PTO shaft.

When handling the PTO shaft, observe the following:

- Only use the PTO shaft provided.
- Adapt the PTO shaft length to the tractor
  - Before initial use.
  - Each time the tractor is changed.
- Read and follow the operating manual for the PTO shaft supplied by the PTO shaft manufacturer.
  Correct use and maintenance of the PTO shaft prevents serious accidents.
- When coupling the PTO shaft, observe the operating manual from the PTO shaft manufacturer.
- Ensure sufficient clearance in the swivelling area of the PTO shaft. Insufficient clearance causes damage to the PTO shaft.
- Observe the permitted drive rev. speed of the machine.
- Observe the correct installation position of the PTO shaft. The tractor symbol on the protective tube of the PTO shaft identifies the tractor-side connection of the PTO shaft.Always install the wide angle joint on the machine side.
- Before switching on the universal joint shaft, read the safety instructions for universal joint shaft operation.

5.6.1 Coupling the PTO shaft to the tractor

1. Check whether the tractor universal joint shaft is switched off.
2. Clean and grease the tractor universal joint shaft.
3. Couple the tractor and machine.
4. Secure the tractor against unintentional starting and unintentional rolling away.
5. Adapt the PTO shaft length to the tractor during initial installation.
6. Couple the PTO shaft (Fig. 72/1) to the tractor universal joint shaft.
   Observe the instructions of the PTO shaft manufacturer.

Fig. 72

Fold the holder (Fig. 75/1) down after coupling the PTO shaft to the tractor.

7. Secure the PTO shaft guard to the tractor using the supporting chain(s) to prevent movement.

   7.1 Fasten the supporting chain so that it as perpendicular to the PTO shaft as possible.

   7.2 Attach the supporting chain in a way that ensures sufficient swivelling range of the PTO shaft in all operating positions. Supporting chains must not become caught on machine or tractor parts.

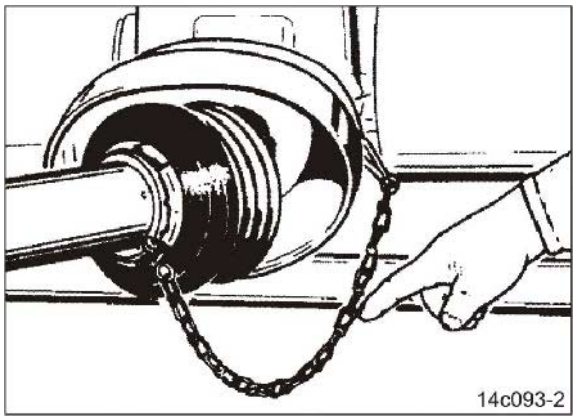

Fig. 73

Limit the lift height of the tractor lower links (Fig. 74/1)!

The machine must not touch the PTO shaft (Fig. 74/2) when the lower links are raised (danger of failure).

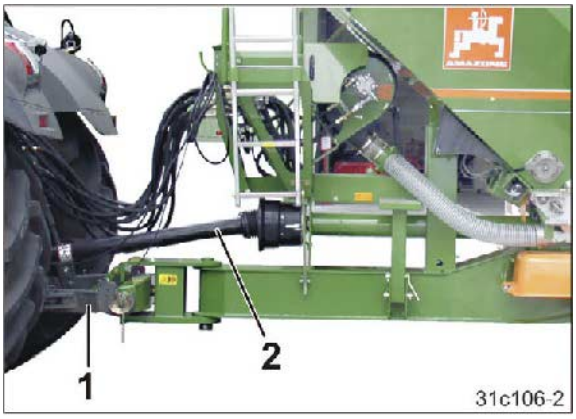

Fig. 74

5.6.2 Uncoupling the PTO shaft from the tractor

CAUTION

Hot PTO shaft components can cause burns. Wear gloves.

1. Switch off the tractor universal joint shaft. Wait until the tool carriers have come to a complete stop.
2. Park the machine on solid level ground.
3. Apply the tractor parking brake, switch off the tractor engine and remove the ignition key.
4. Remove the PTO shaft from the tractor universal joint shaft (observe the instructions from the PTO shaft manufacturer).
5. Carefully lower the PTO shaft onto the folded-up holder (Fig. 75/1).

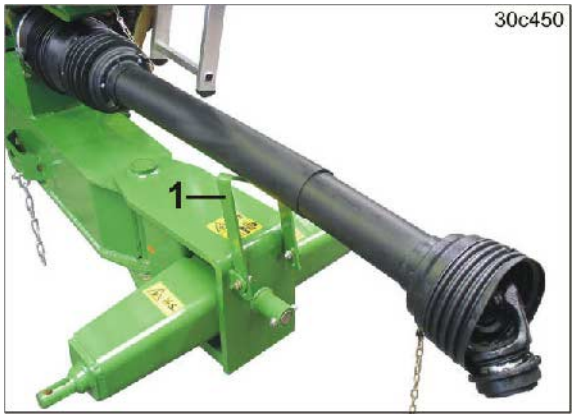

Fig. 75

5.7 Function of the rotary cultivator

The soil tillage tines of the rotary cultivator are "on grip".

Tines that are "on grip":

- Tear up the soil and crumble it.
- Pull the rotary cultivator into the soil.

  Thus the rotary cultivator, supported on the roller, maintains a constant working depth.

The rotary cultivator can be used universally for seed bed preparation:

- With pre-tilling (mulch sowing)
- After chisel cultivators or deep rippers
- After the plough

The soil tillage implement runs especially quietly. The tracks of the soil tillage tines (Fig. 76/1) of two tool carriers arranged next to each other overlap in the soil.

When incorporating straw, the long soil tillage tines made of hardened boron steel allow a large passage clearance.

The round tool carriers (Fig. 76/2) and the smooth bottom of the trough prevent rocks from becoming jammed.

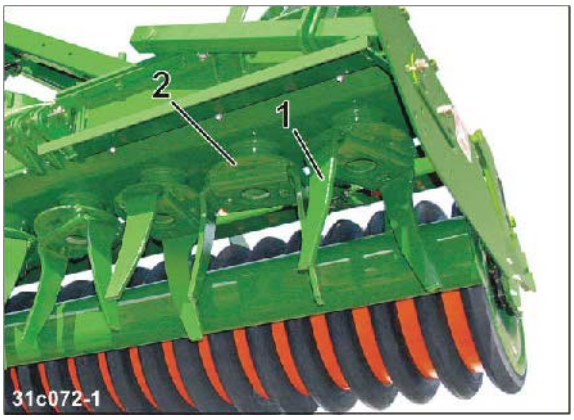

Fig. 76

An earth wall is kicked up in front of the rotary cultivator (see Fig. 77) that fills in undulations.

Straw and other organic matter is mulched close to the surface.

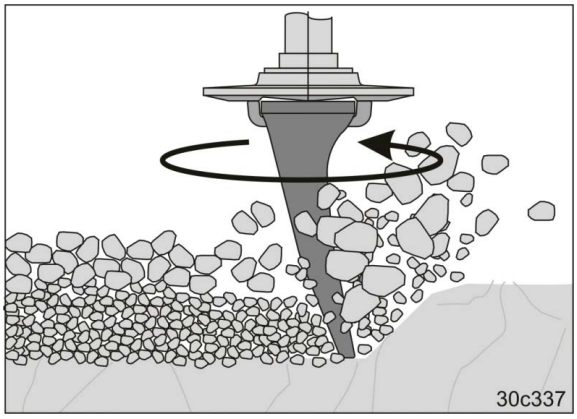

Fig. 77

When "on grip", the soil tillage tines of the rotary cultivator have a sifting effect:

- Coarse particles of soil are transported farther than fine particles of soil.
- The fine earth is concentrated in the lower area of the tilled zone (Fig. 78); the large particles of soil remain at the surface and protect against capping.

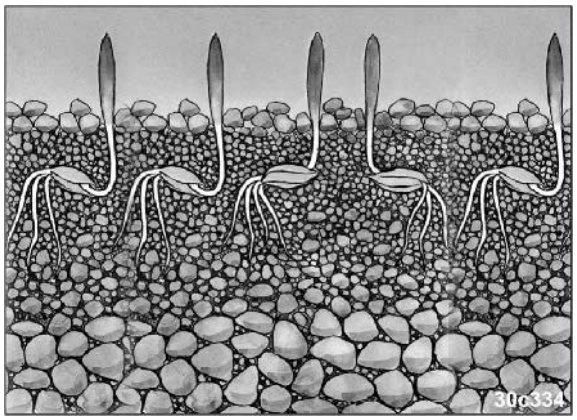

Fig. 78

The soil tillage tines are fastened in sockets shaped in such a way that the soil tillage tines have a spring action and can avoid rocks and other obstacles.

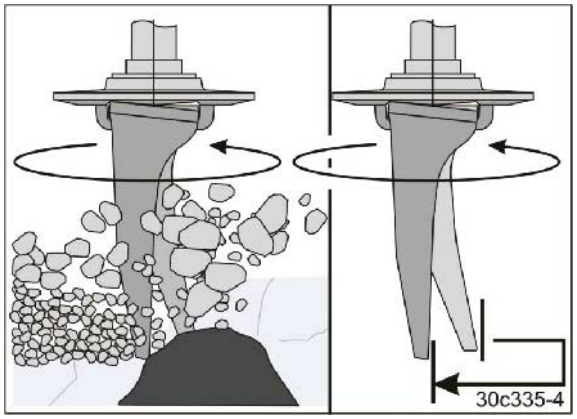

Fig. 79

5.8 Working depth of the rotary cultivator

The working depth of the rotary cultivator is adjusted using the corresponding support on the leading rollers.

Undulations on the field are normally filled in by the earth wall kicked up in front of the tines. The working depth of the rotary cultivator can be enlarged temporarily during work, e.g. for filling extremely deep furrows.

Adjust the working depth of the rotary cultivator immediately before starting work on the field.

The segment (Fig. 80) is used for:

- Adjusting the normal working depth.
- Presetting the greater working depth to which the rotary cultivator can be set hydraulically during work.

Fig. 80

The machine has four segments (Fig. 80) for adjusting the working depth.

Normal working depth

The working depth is adjusted by relocating the depth limiter (Fig. 81/1) on the adjuster segment.

CAUTION

Crushing hazard!

Never reach into the slotted hole (Fig. 81/3).

Adjustment takes place when the machine is lifted. When the machine is lowered, the carrying arm (Fig. 81/2) lies on the depth limiter (Fig. 81/1).

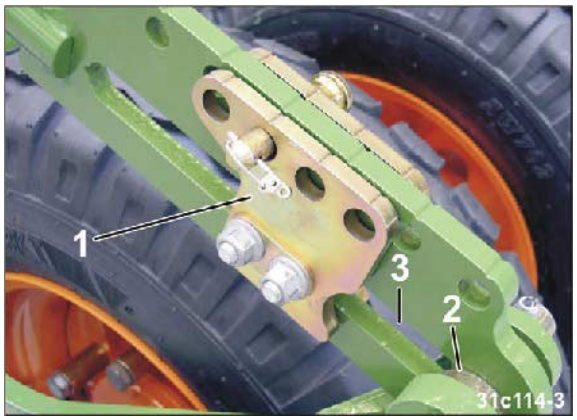

Fig. 81

The working depth can be adjusted in fine increments and positioned using a pin (Fig. 82/1).

Position two notches (Fig. 82/2) so that they are level with each other by moving the depth limiter (Fig. 82/3).

The working depth increases the farther the depth limiter (Fig. 82/3) is pushed towards the hydraulic cylinder.

Always secure the pin using a lynch pin (Fig. 82/4).

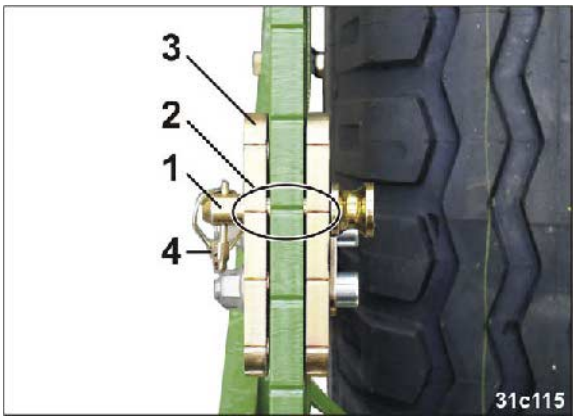

Fig. 82

Enlarging the working depth during work

The working depth of the rotary cultivator can be adjusted hydraulically during work.

To adjust the working depth during work, the adjuster segments are equipped with hydraulic cylinders (Fig. 83/1).

At normal working depth, all hydraulic cylinders (as shown in Fig. 83) are pressurised.

The working depth can be adjusted by swivelling the stops (Fig. 83/2).

Actuating the tractor control unit 3 relieves the hydraulic cylinders (Fig. 83/1), and they rest on the stops (Fig. 83/3) an.

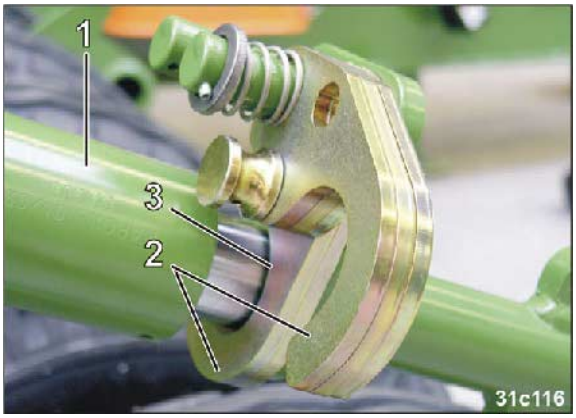

Fig. 83

The maximum working depth is reached if no stop is touching the piston of the hydraulic cylinder.

Return the setting to the normal working depth as soon as the greater working depth is no longer needed.

If the system is not needed for a long period, move all the stops against the piston and relieve the hydraulic cylinder.

5.9 Rotary cultivator drive

The rotary cultivator has a three-gear transmission (Fig. 84/1) that allows different rotary speeds to be set with a constant tractor universal joint shaft speed.

The three-gear transmission transmits the drive forces of the tractor universal joint shaft to two angular gearboxes (Fig. 84/2) via PTO shafts (Fig. 84/3).

The angular gearboxes power the tool carriers. Two ratchet clutches prevent damage to the gearbox that could occur in the event of a brief stop of the tool carriers, for example.

One ratchet clutch is installed on the PTO shaft (Fig. 84/3) and is located on the input shaft under the all-round guard (Fig. 84/4).

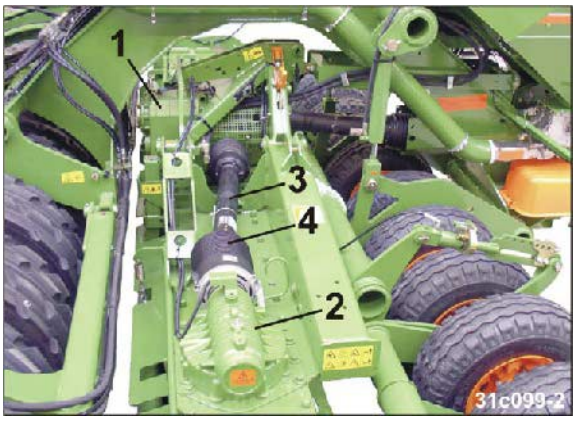

Fig. 84

Do not switch the ratchet clutches during repair, as otherwise their function is no longer guaranteed.

5.9.1 Tractor universal joint shaft speed / tine speed

Tractor universal joint shaft speed

Set the tractor universal joint shaft speed to 1000 rpm.

Working with a tractor universal joint shaft speed of 540 rpm leads to very high torque at the PTO shaft and can cause rapid wear of the overload clutches.

Tine speed

Different soils require that the tine speed be adjusted in order to attain the desired fine seed bed.

The tine speed can be adjusted at the three-gear transmission.

If the tine speed is increased, the power requirement and tine wear increase disproportionately. Never select a higher tine speed than is absolutely necessary.

Selecting the right tine speed [see Table (Fig. 85)] lowers wear costs and increases area efficiency.

A: Tine speeds [rpm]
(at tractor universal joint shaft speed of 1000 rpm)

B: Gearbox shift lever positions

Example:

Gearbox shift lever position:.....2

Tine speed: .....296 rpm

Tractor universal
joint shaft speed: .....1000 rpm

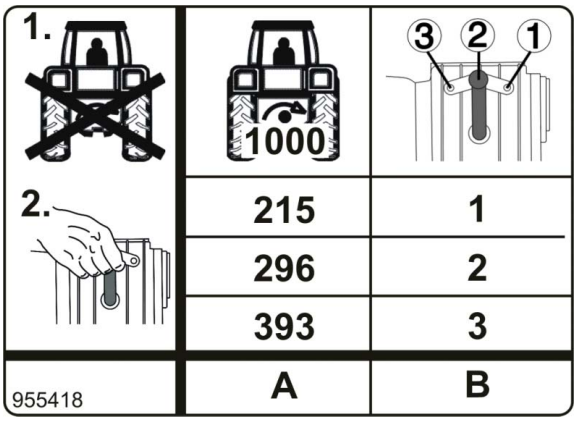

Fig. 85

5.10 Length of the soil tillage tines

The soil tillage tines are made of hardened high-strength boron steel. They are subject to wear.

Replace the soil tillage tines no later than when they reach the minimum length L = 150 mm(Fig. 86).

For great working depths, the tines must be replaced earlier in order to avoid damage and wear to the tool carriers.

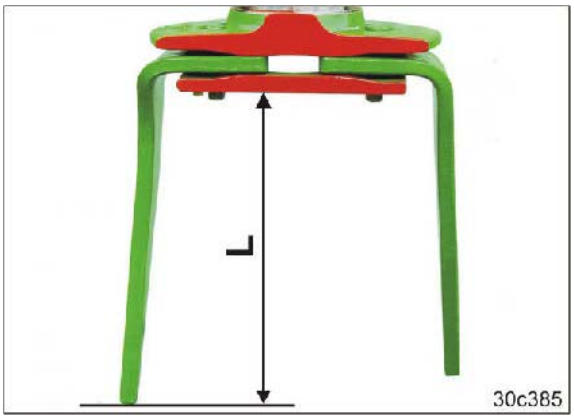

Fig. 86

If the tines fall below the minimum length of 150 mm, claims due to rock damage shall not be accepted.

5.11 Rotary cultivator levelling bar

Any ground undulations present behind the rotary cultivator are eliminated by the levelling bar (Fig. 87/1).

It crumbles the residual clods on heavy soils and loose soil is pre-consolidated by the levelling bar.

A hand lever (Fig. 87/2) is used to adjust the height of the levelling bar, which is then pinned and secured using bolts (Fig. 87/3) and lynch pins.

For conventional drilling, adjust the working height of the levelling bar so that an earth wall is always pushed in front to level existing undulations.

For mulch sowing, place the levelling bar in one of the upper positions depending on the crop residues.

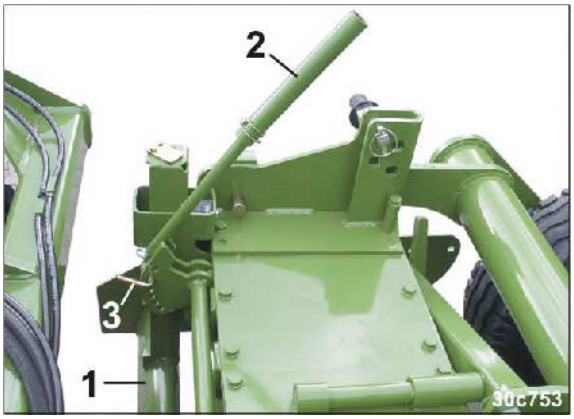

Fig. 87

5.12 Rotary cultivator side panels

The side panels (Fig. 88/1) ensure that the tilled soil cannot escape to the side. The stream of soil is guided towards the rear so that it lands directly in front of the wedge ring tyres.

Fig. 88

In order to restrict the soil stream effectively, the working depth of the side panels, the working depth of the rotary cultivator, and the spring tension must be adjusted to the soil conditions.

Screw the side panels:

- So that they slip through the soil at a maximum depth of 1 to 2 cm.
- Higher in front than at the rear, if the field is heavily covered with straw.

The swivelling side guide panels can avoid obstacles by moving upwards.

The dead weight of the side plate, along with a strong tension spring (Fig. 89/1), bring the side plate back into working position.

The tension of the spring has been adjusted at the factory for light and medium soils.

Adjust the spring tension as follows:

- Increase it on heavy soils.
- Decrease it when incorporating straw.

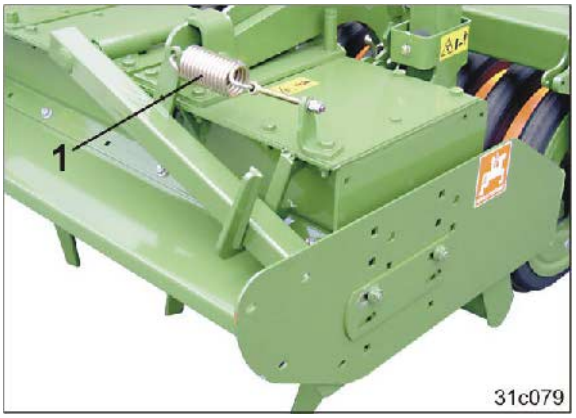

Fig. 89

5.13 Roller holder

The roller holder (Fig. 90/1) contains

- the pack with the operating manual
- the dosing rollers in parking position
- the scales for the calibration test.

Fig. 90

5.14 Seed hopper

The seed hopper (Fig. 91/1) is well accessible for filling, calibrating and residue draining.

The shape of the seed hopper ensures an unobstructed view of the tools during work.

The full area opening of the seed hopper allows rapid filling.

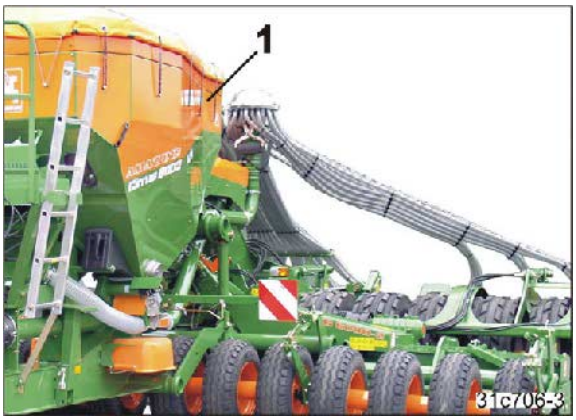

Fig. 91

5.14.1 Digital fill level monitoring (optional)

The level sensors monitor the seed level in the seed hopper.

If the seed level reaches the level sensor, the AMATRON+ displays the warning message (Fig. 92). An alarm is sounded at the same time. This alarm signal is intended to remind the tractor driver to fill up the seeds again.

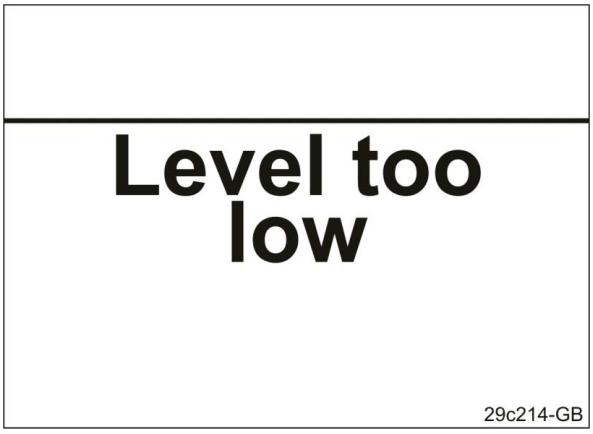

Fig. 92

The height of the level sensor can be adjusted (Fig. 93/1) in the seed hopper. The residual seed volume can be set, at which the warning message and the alarm signal is to be emitted.

You can only adjust the height of the level sensor when the seed hopper is empty.

Fig. 93

5.15 Seed dosing

In the seed dosing unit (Fig. 94/1) the seed is dosed by a dosing roller.

The dosing roller is driven by an electric motor (full dosing).

The seed falls into the injector sluice (Fig. 94/2) and is directed by the air flow to the distributor head and then to the coulters.

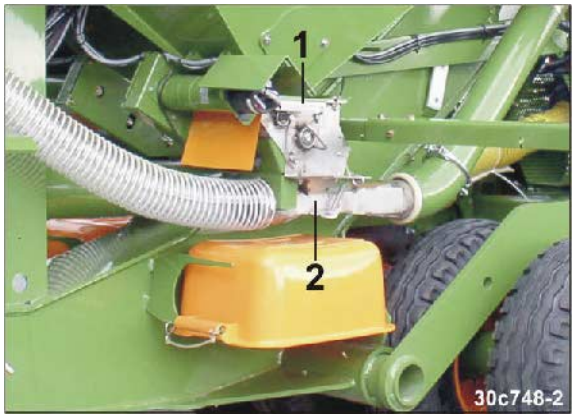

Fig. 94

The dosing roller selection (Fig. 95/1) is dependent on the

- Grain size
- Spread rate.

You can choose between dosing rollers with various sizes of chambers or various volumes.

You must select a dosing roller volume that is not too large but that is sufficient to spread the required quantity (kg/ha).

Use a calibration test to check whether the selected dosing roller reaches the spread rate.

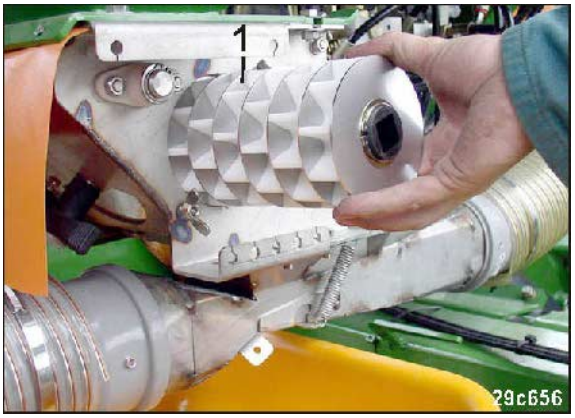

Fig. 95

The pressure gauge (Fig. 96/1) displays the status of the unit to the tractor driver.

If the pressure gauge is depressurised:
The electric motors drive the dosing rollers when the radar sends impulses.

If the pressure gauge is pressurised:
The drive of the dosing rollers is switched off.

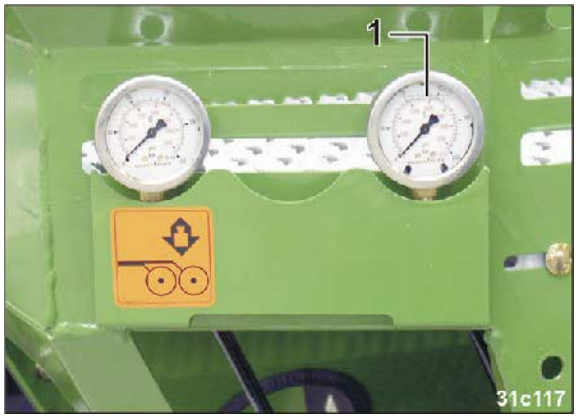

Fig. 96

5.15.1 Table: Dosing rollers

Dosing rollers			
Order no.	976731	961457	967777
Volume [cm^3]	7.5	20	120
Order no.	961456	961454	967774
Volume [cm^3]	210	600	700

Fig. 97

For sowing particularly large seeds (e.g. beans), the chambers (Fig. 98/1) of the dosing roller can be enlarged by repositioning the wheels and the plates.

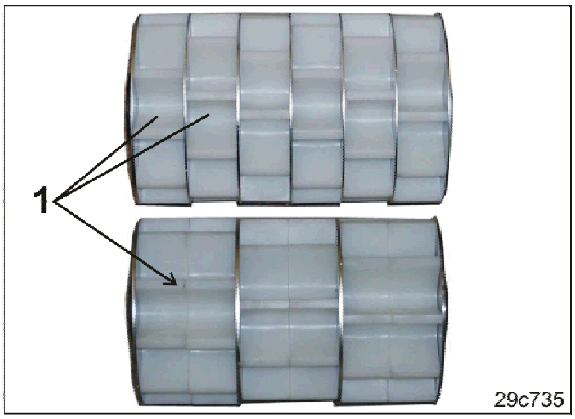

Fig. 98

Dosing wheel without chambers (order no. 969904)

The volume of some dosing rollers can be modified by reposition-ing/removing the existing wheels and inserting dosing wheels without chambers.

Fig. 99

5.15.2 Table Seed dosing rollers

Seed	Dosing rollers					
	7.5 cm³	20 cm³	120 cm³	210 cm³	600 cm³	700 cm³
Beans						X
Spelt wheat					X	
Peas						X
Flax (dressed)		X	X	X		
Barley				X	X	
Grass seed				X		
Oats					X	
Millet			X	X		
Lupins			X	X		
Alfalfa		X	X	X		
Maize			X			
Poppy seed	X					
Oil linen (moist dressing)		X				
Fodder radish		X	X	X		
Phacelia		X	X			
Rapeseed		X				
Rye				X	X	
Red clover		X	X			
Mustard		X	X	X		
Soy					X	X
Sunflowers			X	X		
Turnips		X				
Wheat				X	X	
Vetches				X		

The dosing roller that is required depends on the seed and the spread rate.

For seed not listed in the table, select the dosing roller for a seed type of a similar grain size.

5.15.3 Seed rate adjustment with full dosing (optional)

With machines with full dosing one electric motor (Fig. 100/1) each drives a dosing roller.

The rotational drive speed of the dosing roller is determined by the working speed and the preset sowing rate.

Enter the required seed quantity in the Amatron+.

The Amatron+ uses this value and the adjusted machine working width to calculate the theoretical number of rotations of the electric motor or the dosing roller.

For machines that have several electric motors, the speed of all of the electric motors is the same.

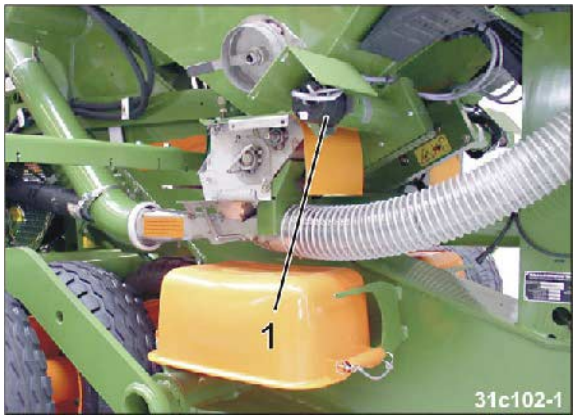

Fig. 100

Run the first calibration test and enter the weight of the collected seed quantity in the Amatron+.

Using this value, the Amatron+ calculates the number of rotations of the electric motor that are required for the field work later on.

A second calibration test is essential. The required seed quantity is usually applied during the second calibration test. If this is not the case, repeat the calibration test until the required seed quantity is reached.

Always carry out a calibration test:

- during the initial operation
- when the seed type is changed
- if the seed type is identical, but the grain size, grain shape, specific weight and dressing are different
- after replacing the dosing roller
- if the tank takes more/less time than expected to empty. The actual spread rate then does not correspond to the spread rate that was determined during the calibration test.

The speed of the dosing roller is determined by the spread rate that is set in the Amatron+ and the working speed. The higher the speed of the dosing roller, the greater the spread rate.

The speed of the dosing roller automatically adapts to the changing working speed.

The seed incurred in the calibration test drops into the calibration troughs.

The number of calibration troughs is equal to the number of seed dosers.

The calibration troughs are nested for transport and fastened to the rear wall of the hopper secured with a linch pin (Fig. 101/1).

Fig. 101

Seed predosing

The seed rate predosing, which doses the seeds in the air flow, can be cut in before the machine starts up.

The run time of the seed predosing is adjustable.

Seed predosing is used when corners are to be sowed which can only be reached when the machine is reversed.

Start-up ramp

The start-up ramp can be cut in with which the seed rate is adjusted to the machine acceleration after the turning operation.

After turning and actuating the control unit 1, the machine goes to its working position. As soon as the machine has been lowered into working position, the seed is metered into the delivery line. The "start-up ramp" compensates for system-specific reductions in seed rate during the acceleration phase. The factory default values can be adapted.

For this purpose, the probable working speed set in the calibration menu is used. The starting speed and the time until the probable working speed is reached can be set as a percentage of the probable working speed.

This time and the percentage value depend on the respective tractor acceleration and prevent the dosing of insufficient seed during the acceleration phase.

Example

Values adjustable in the **AMATRON+**

Probable
working speed: .....10 km/h

Starting speed: .....50 %

Time to achieve working speed: ..8 seconds

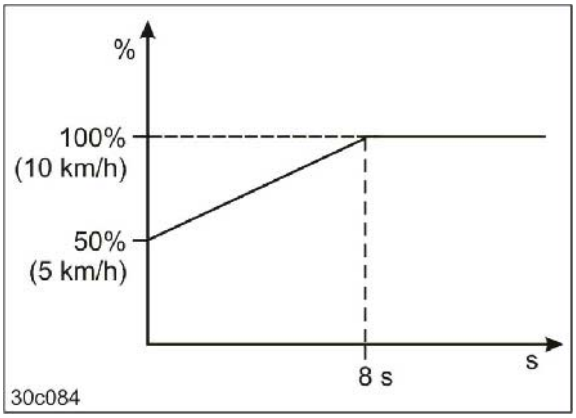

5.15.4 Increasing sowing rate, coulter pressure and harrow pressure

The sowing rate can be adapted during drilling in the event of a change from normal soil to heavy soil by corresponding input in the AMATRON+.

If the coulter pressure and exact harrow pressure are also to be increased, the coulter pressure button must be selected in the AMATRON+. Actuating control valve 2 then increases the coulter pressure and the exact harrow pressure. Individual functions can be cut out by repositioning the pins.

It is necessary to equip the machine with

- the hydr. coulter pressure adjustment
- the hydr. exact harrow pressure adjustment.

5.16 Blower

The hydraulic motor (Fig. 102/2) drives the blower fan (Fig. 102/1), which generates the air current. The air current conveys the seeds from the injector sluice to the coulters via the distributor head.

The blower speed determines the air volume of the air current.

The higher the fan speed, the greater is the air volume generated.

Refer to the table (Fig. 103, below) for the required blower fan speed (target blower fan speed).

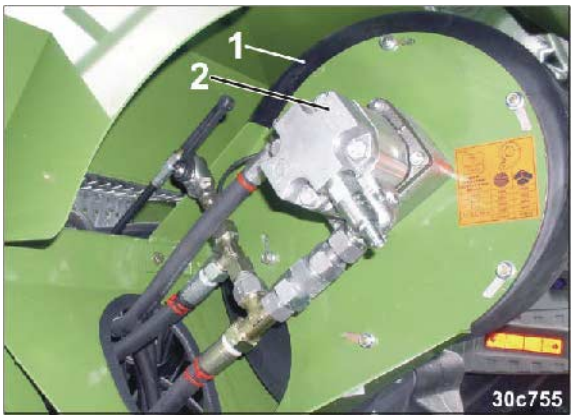

Fig. 102

Set the target blower fan speed:

- Via the tractor's flow control valve
- On the pressure relief valve of the blower fan hydraulic motor if the tractor does not have a flow control valve.

AMATRON+ displays the current blower fan speed and sends an alarm in the event of any deviation.

The blower fan speed (rpm) is dependent on:

- The machine working width (Fig. 103/1)
- The seed
  - Fine seed types, e.g. rape (Fig. 103/2) or grass seed
  - Grain and pulses (Fig. 103/3).

Example:

- Cirrus 6002
- Cereal seed

Required blower fan speed: 3900 rpm.

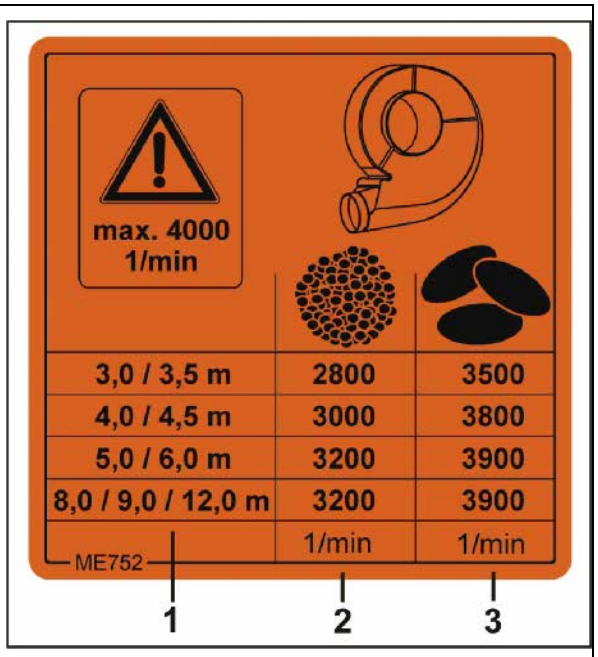

Fig. 103

DANGER

Do not exceed the maximum fan speed of 4000 rpm.

The fan speed alters until the hydraulic fluid has reached its working temperature.

On initial operation correct the fan speed up to attainment of the working temperature.

If the fan is put back into operation after a long stoppage period, the preset fan speed is not attained until the hydraulic fluid has heated up to working temperature.

5.16.1 Distributor head

In the distributor head (Fig. 104/1) the seed is distributed uniformly over all the seed coulters.

The number of distributor heads depends on the machine working width. A seed dosing unit always supplies one distributor head.

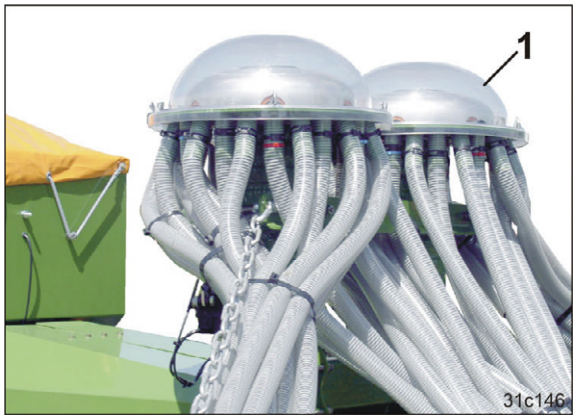

Fig. 104

5.17 Radar

The radar measures the covered distance.

On the basis of these data, AMATRON+ calculates

- the travel speed
- the worked area (hectare counter)
- the required speed for the electric motor of each dosing roller

Fig. 105

5.18 Wedge ring tyres

The wedge ring tyres (Fig. 106/1)

- are arranged adjacent to each other
- secure the cultivated soil in strips in which the seed is placed
- form the integrated running gear for transport journeys

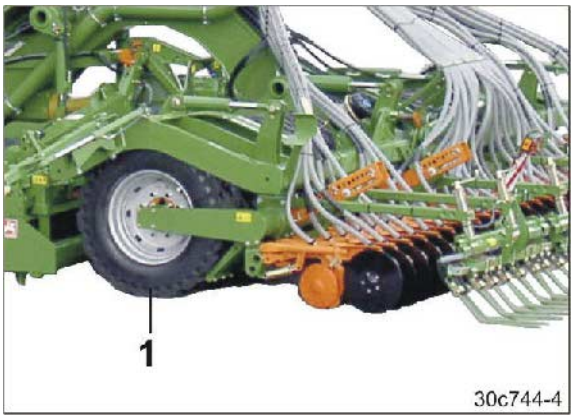

Fig. 106

The turning operation occurs, as required

- on the axle
- on the roller

Turning on the axle
The integrated running gear raises the machine before turning.

Turning on the roller
The machine turns on all wedge ring tyres (except the two wedge ring tyres in the middle), with the soil tillage implement lifted and the coulter frame lifted.

5.19 Seed planting

The wedge ring tyres (Fig. 107/1) produce highly compacted strips in which the coulters lay the seed.

The strips have soil zones of differing compactness.

Zone ①: highly compact soil in which the coulters place the seed

Zone ②: medium compactness

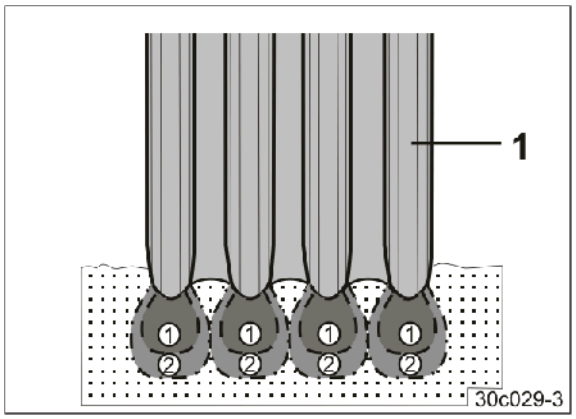

Fig. 107

5.19.1 RoTeC+ coulter

The RoTeC+ coulter (Fig. 108):

- forms a sowing slit in the strips of ground compacted by the wedge ring tyres.
- deposits the seed into the sowing furrow.

The flexible plastic disc (Fig. 108/1)

- limits the seed planting depth
- cleans the rear side of the sowing disc (Fig. 108/2)
- improves the drive of the sowing disc by gripping the soil.

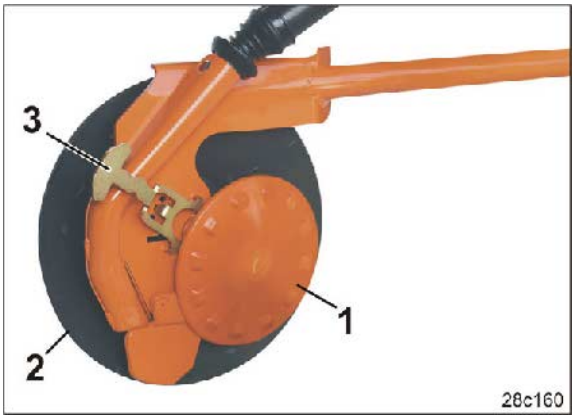

Fig. 108

Die RoTeC+ coulters are used for ploughing and mulch sowing.

Even on fields with large quantities of straw and plant remains, mulch sowing is possible with RoTeC+ coulters.

At high travel speeds, the sowing disc (Fig. 108/2), which is inclined with respect to the direction of travel, shifts little soil.

The steady coulter ride and the precise seed placement result from the high coulter pressure and the support of the coulter on the plastic disc.

The flat sowing disc (Fig. 109) allows very shallow sowing, e.g. in particularly light sandy soils.

Fig. 109

The plastic disc can be fitted in three positions or it can be removed to limit the seed placement depth (Fig. 110/1 - 4).

The plastic disc can be adjusted or removed without the need for tools by using the handle (Fig. 108/5).

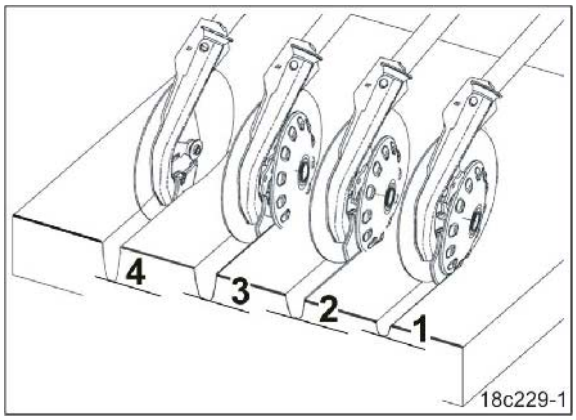

Fig. 110

5.19.2 Coulter pressure

The seed planting depth depends on three factors

- Type of soil
- Coulter pressure
- Travel speed

With the hydr. coulter pressure adjustment, the coulter pressure is preset for two types of soil. This means that the coulter pressure can be adjusted to the soil during work, e.g. in event of a change from normal soil to heavy soil and vice versa.

Two pins (Fig. 111/1) in an adjuster segment limit the hydraulic cylinder. With increased coulter pressure, the stop (Fig. 111/2) of the hydraulic cylinder is at the top pin.

The foldable machines are equipped with three adjuster segments.

Fig. 111

The pressure gauge (Fig. 112/1) displays the status of the unit to the tractor driver.

If the pressure gauge is depressurised:
The coulters work with normal coulter pressure.

If the pressure gauge is pressurised:
The coulters work with increased coulter pressure.

Fig. 112

5.20 Exact harrow

The exact harrow (Fig. 113/1) covers the seeds deposited in the sowing furrows with loose earth and smoothes the ground.

The following are adjustable

- The exact harrow position
- The exact harrow pressure.
  The exact harrow pressure determines the working intensity of the exact harrow and is independent of the soil type.

Set the exact harrow pressure so that no earth bank remains on the field after seed covering.

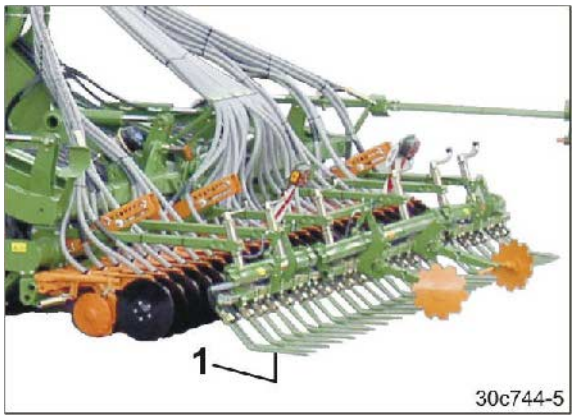

Fig. 113

The draw springs that create the exact harrow pressure are pretensioned by a lever (Fig. 114/1).

The lever (Fig. 114/1) is applied in the adjuster segment by way of a bolt (Fig. 114/2).

The higher the bolt is inserted in the group of holes, the greater the harrow pressure.

For hydraulic exact harrow adjustment the second bolt (Fig. 114/3) is inserted as a stop above the lever (Fig. 114/1) in the adjuster segment.

The harrow pressure is increased as soon as the hydraulic cylinder applies pressure and the lever contacts the top pin.

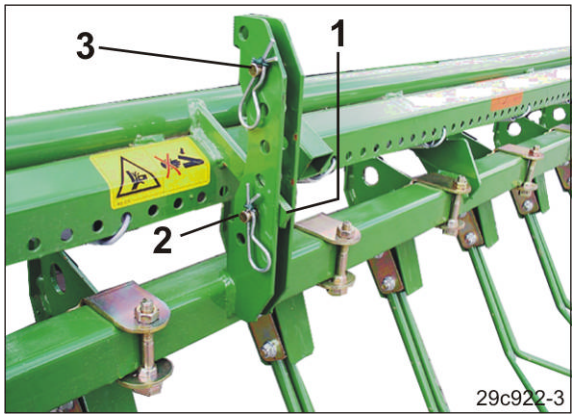

Fig. 114

5.21 Roller harrow (optional)

The roller harrow consists of

- Harrow tines (Fig. 115/1)
- Press rollers (Fig. 115/2).

The harrow tines close the seed furrows.

The press rollers press the seeds into the furrows. Better soil contact means more humidity is available for germination. Voids are closed and obstruct snails' access to the seed.

The following are adjustable

- the working depth of the harrow tines
- the angle of the harrow tines
- the roller pressure

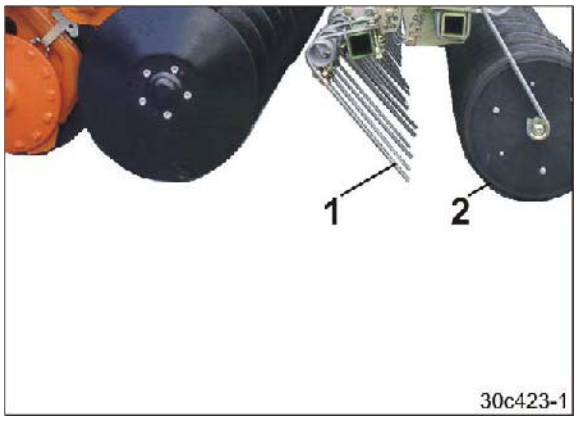

Fig. 115

5.22 Markers

The hydraulically-actuated track markers dig into the ground alternately on the left and the right of the machine.

In so doing, the active track marker creates a mark. This mark serves as an orientation aid for the next run after turning.

On the next run, the tractor driver drives over the centre of the mark.

Fig. 116

It is possible to set:

- The length of the track marker
- The working intensity of the track marker, depending on the type of soil.

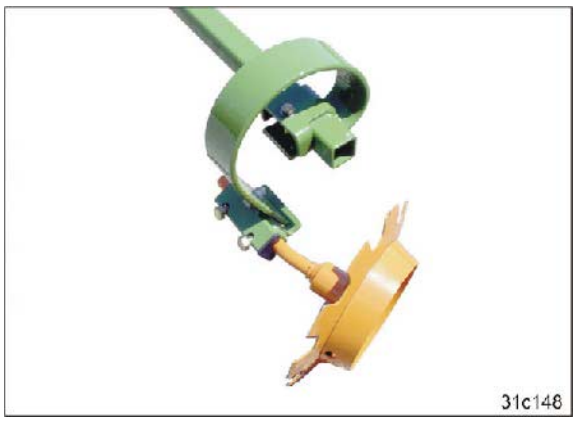

Fig. 117

To pass obstacles the active track marker can be folded in and out on the field.

Before folding in the track marker, actuate the obstacle button (AMATRON+) so that the tramline counter of the sowing wheel tramline control does not shift on or the automatic process is not initiated before the turning operation.

If the track marker still encounters hard obstacles, the overload protection system of the hydraulic system responds and the hydraulic cylinder gives way to the obstacle and thus protects the track marker against damage.

After passing the obstacle the tractor driver folds the track marker out again by actuating the control unit.

Deactivate the obstacle button after the obstacle has been passed.

5.23 Creation of tramlines

The tramline selection allows the creation of tramlines at preselected intervals on the field. To set the different tramline distances, appropriate tramline rhythms have to be entered into the AMATRON+.

When creating the tramlines:

- The tramline circuit on the distributor head uses sliders (Fig. 118/1) to block the seed feeding lines to the seed lines (Fig. 118/2) of the tramline coulters
- The tramline coulters do not deposit any seeds on the ground.

Seed supply to the tramline coulters is interrupted as soon as the electric motor (Fig. 118/3) closes the appropriate seed tubes (Fig. 118/2) in the distributor head.

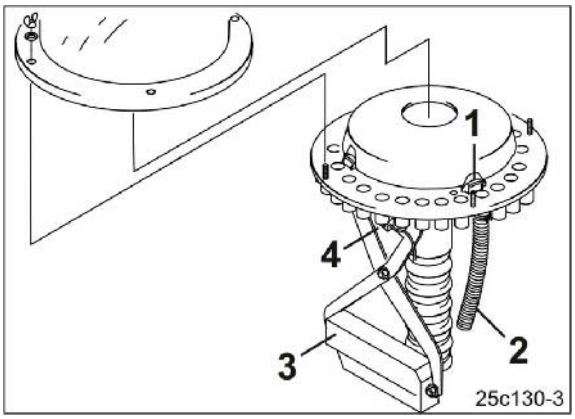

Fig. 118

Upon creating a tramline, the tramline counter indicates the number "0" on the AMATRON+. The seed volume, which is reduced when creating a tramline, can be set. It is necessary to equip the machine with the electrical seed rate adjustment or full dosing.

A sensor (Fig. 118/4) checks whether the sliders (Fig. 118/1), which open the and close the seed line tubes (Fig. 118/2), are working properly.

If the setting is wrong, the AMATRON+ emits an alarm.

The tramline selection allows the creation of tramlines at preselected intervals on the field.

Tramlines are seed-free tracks (Fig. 119/A) for fertilising and plant care machines used later.

The tramline spacing (Fig. 119/b) corresponds to the working width of the cultivating machines (Fig. 119/B), e.g. fertiliser spread and/or sprayer, which are used on sown fields.

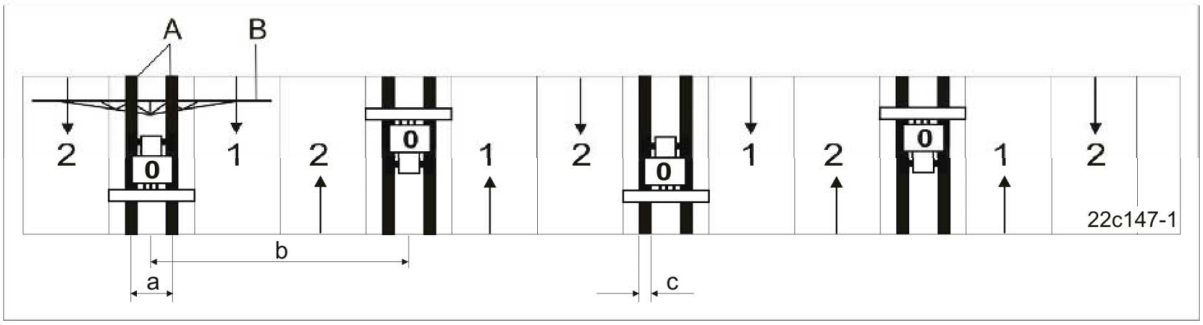

Fig. 119

To set the different tramline spacings (Fig. 119/b), appropriate tramline rhythms must be entered on the AMATRON+.

The figure (Fig. 119) shows the tramline rhythm 3. During work, the field runs are number consecutively (tramline counter) and displayed on the AMATRON+.

In tramline rhythm 3, the tramline counter shows the field runs in the following order: 2-0-1-2-0-1-2-0-1…etc.

Upon creating a tramline, the tramline counter indicates the number "0" on the AMATRON+.

The required tramline rhythm (see table Fig. 120) is derived from the required tramline spacing and the working width of the seed drill. Further tramline rhythms can be seen in the AMATRON+ operating manual.

The wheelmark spacing (Fig. 119/a) of the tramline corresponds to that of the cultivating tractor and is adjustable.

The track width (Fig. 119/c) of the tramline increases with an increasing number of tramline coulters fitted next to each other.

Tramline rhythm [1)]	Seed drill working width		
	3.0 m	4.0 m	6.0m
	Tramline spacing (working width of the fertiliser spreader and field sprayer)		
1			12 m
3	9m	12 m	18 m
4	12 m	16 m	24 m
5	15 m	20m	30m
6	18 m	24 m	36 m
7	21 m	28 m	42m
8	24 m	32 m	
9		36 m	
2 plus	12 m	16 m	24 m
6 plus	18 m	24 m	36 m

[1)] For the complete list of all tramline rhythms, refer to the AMATRON+ operating manual.

Fig. 120

5.23.1 Examples for creating tramlines

The creation of tramlines is shown in Figure (Fig. 121) using various examples:

A = Working width of the seed drill

B = Tramline spacing
(= working width of fertiliser spreader / field sprayer)

C = Tramline rhythm (input on the AMATRON+)

D = Tramline counter (during work, the field runs are number consecutively and displayed on the AMATRON+).

Carry out inputs and displays using the AMATRON+ operating manual.

Example:

Working width,
seed drill:..... 6 m

Working width,
fertiliser spreader or
field sprayer:..... 18 m = 18 m tramline spacing.

1. In the adjacent table (Fig. 121) look for the following:
   in column A the seed drill's working width (6 m) and
   in column B the tramline spacing (18 m).
2. On the same line in column "C", take the reading for the tramline rhythm (tramline rhythm 3) and set this on the AMATRON+.
3. On the same line in column "D" under the inscription "START", take the reading of the tramline counter for the first field run (tramline counter 2) and enter this figure on the AMATRON+. Input this value directly before commencing the first field run.

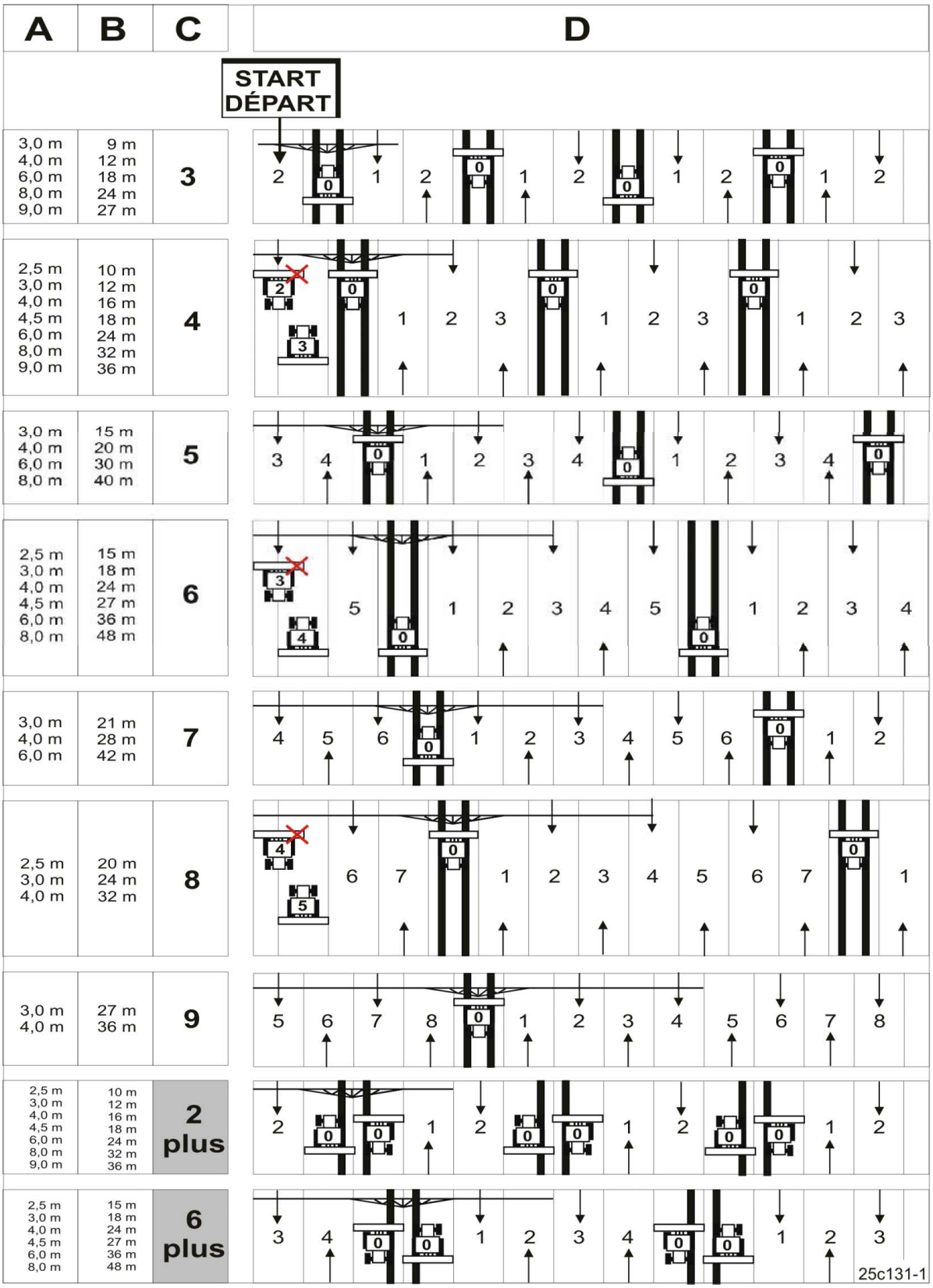
A
B
C
D
START
DÉPART
3,0 m 4,0 m 6,0 m 8,0 m 9,0 m
9 m 12 m 18 m 24 m 27 m
3
2,5 m 3,0 m 4,0 m 4,5 m 6,0 m 8,0 m 9,0 m
10 m 12 m 16 m 18 m 24 m 32 m 36 m
4
3,0 m 4,0 m 6,0 m 8,0 m
15 m 20 m 30 m 40 m
5
2,5 m 3,0 m 4,0 m 4,5 m 6,0 m 8,0 m
15 m 18 m 24 m 27 m 36 m 48 m
6
3,0 m 4,0 m 6,0 m
21 m 28 m 42 m
7
2,5 m 3,0 m 4,0 m
20 m 24 m 32 m
8
3,0 m 4,0 m
27 m 36 m
9
2,5 m 3,0 m 4,0 m 4,5 m 6,0 m 8,0 m 9,0 m
10 m 12 m 16 m 18 m 24 m 32 m 36 m
2 plus
2,5 m 3,0 m 4,0 m 4,5 m 6,0 m 8,0 m
15 m 18 m 24 m 27 m 36 m 48 m
6 plus
25c131-1

Fig. 121

5.23.2 Tramline rhythm 4, 6 and 8

Figure (Fig. 121) shows examples for creating tramlines with the tramline rhythm 4, 6 and 8.

It shows work with the seed drill at half width (partial width) during the first field run.

During work with partial width switched off, the drive of the appropriate dosing roller is interrupted. Refer to the AMATRON+ operating manual for a detailed description.

Another option for creating tramlines with the tramline rhythm 4, 6 and 8 is to begin with the full working width and the creation of a tramline (see Fig. 122).

In this case, the cultivating machine works at half working width during the first field run.

After the first field run, reset the full machine working width!

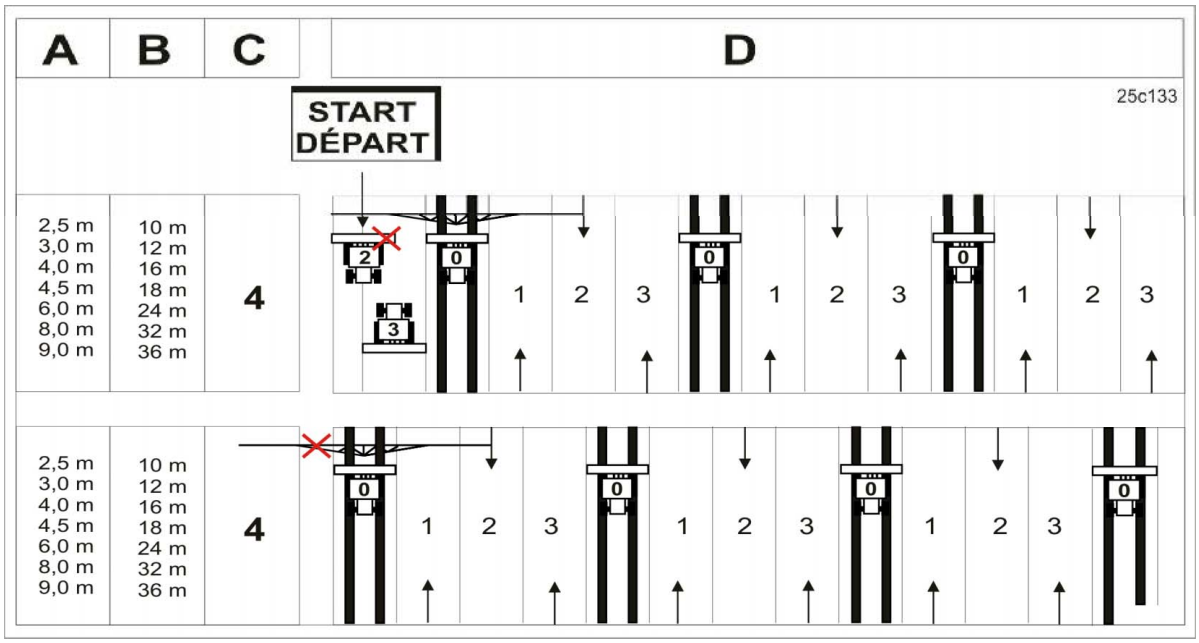

Fig. 122

5.23.3 Tramline rhythm 2 plus and 6 plus

Figure (Fig. 121) shows examples of tramline creation with tramline rhythms 2 plus and 6 plus.

When tramlines are created with the tramline rhythm 2 plus and 6 plus (Fig. 123), tramlines are created during the trips forward and backward over the field.

On machines with

- tramline rhythm 2 plus, the seed feed to the tramline coulters may only be interrupted on the left side.
- tramline rhythm 6 plus, the seed feed to the tramline coulters may only be interrupted on the left side.

the seed feed to the tramline coulters is interrupted.

Work always starts on the right hand edge of the field.

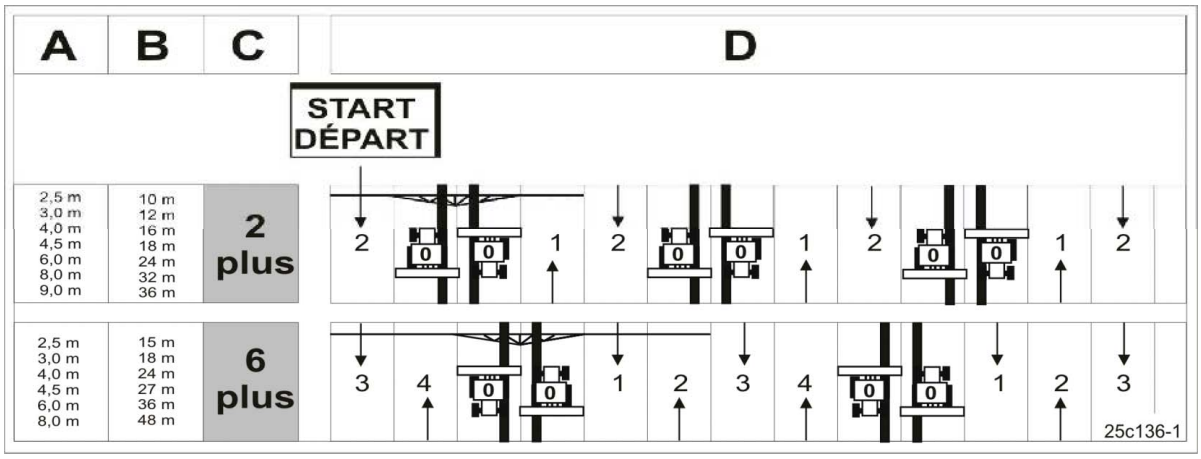

Fig. 123

5.23.4 Half-sided switching off (part width)

With certain tramline rhythms it is necessary to start the sowing operation at the start of the field initially only at half the working width (part width).

The seed supply to the coulters of the machines can be cut out on one side by means of two distributor heads (Fig. 124/1).

On seed drills with two distributor heads

- one distributor head supplies seed to the sowing coulters of one half of the machine.
- the seed dosing of one half of the machine (part width) can be switched off.

  To do so, switch off the electric motor (full dosing) of the corresponding dosing roller.

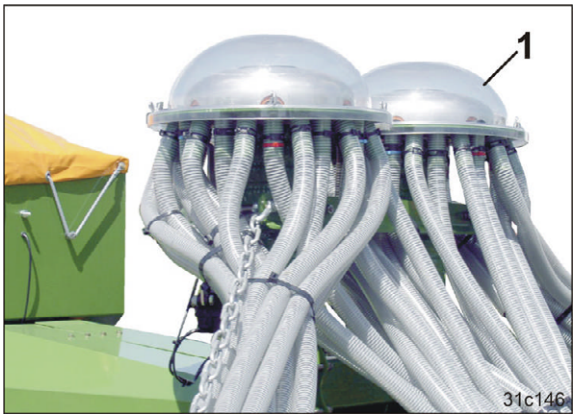

Fig. 124

5.23.5 Tramline marker (optional)

When tramlines are being created, the track discs (Fig. 125) lower automatically and mark the tramline that has just been created. Due to this the tramlines already become visible before the seed has been sown.

It is possible to set:

- the wheelmark spacing of the tramline (Fig. 119/a)
- the working intensity of the track discs

The track discs are raised if no tramline is created.

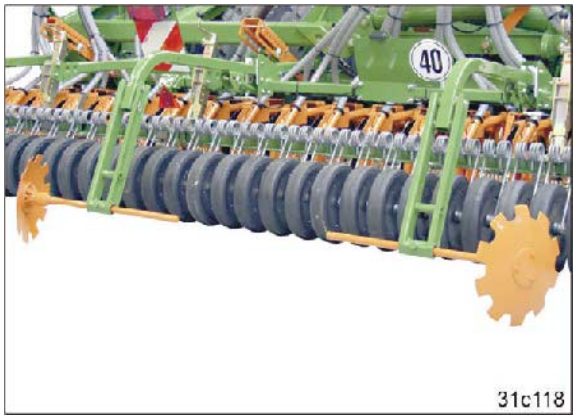

Fig. 125

6 Commissioning

This section contains information

- on initial operation of your machine
- on checking how you may attach the machine to your tractor.

- Before operating the machine for the first time the operator must have read and understood the operating manual.
- Take heed of section " Safety information for users" onwards on
  - Coupling and uncoupling the machine
  - Machine transportation
  - Use of the machine
- Only couple and transport the machine to/with a tractor which is suitable for the task.
- The tractor and machine must meet the national road traffic regulations.
- The operator and the user shall be responsible for compliance with the statutory road traffic regulations.

WARNING

Risk of contusions, cutting, catching, drawing in and knocks in the area of hydraulically or electrically actuated components.

Do not block the operator controls on the tractor which are used for hydraulic and electrical movements of components, e.g. folding, swivelling and pushing movements. The movement must stop automatically when you release the appropriate control. This does not apply to equipment movements which:

- are continuous or
- are automatically locked or
- require a float position or pressure position due to their function.

6.1 Checking the suitability of the tractor

WARNING

Danger of breaking during operation, insufficient stability and insufficient tractor steering and braking power on improper use of the tractor!

- Check the suitability of your tractor before you attach or hitch the machine to the tractor.

  You may only connect the machine to tractors suitable for the purpose.

- Carry out a brake test to check whether the tractor achieves the required braking delay with the machine connected.

Requirements for the suitability of a tractor are, in particular:

- The approved total weight
- The approved axle loads
- The approved drawbar load at the tractor coupling point
- The load capacity of the installed tyres
- The approved trailer load must be sufficient

  You can find this data on the identification plate or in the vehicle documentation and in the tractor operating manual.

The front axle of the tractor must always be subjected to at least 20% of the empty weight of the tractor.

The tractor must achieve the brake delay specified by the tractor manufacturer, even with the machine connected.

6.1.1 Calculating the actual values for the total tractor weight, tractor axle loads and load capacities, as well as the minimum ballast

The approved total tractor weight, specified in the vehicle documentation, must be greater than the sum of the

- Tractor empty weight
- ballast weight and
- total weight of the attached machine or noseweight of the hitched machine.

This notice applies only to Germany.

If, having tried all possible alternatives, it is not possible to comply with the axle loads and / or the approved total weight, then a survey by an officially-recognised motor traffic expert can, with the approval of the tractor manufacturer, be used as a basis for the responsible authority to issue an exceptional approval according to § 70 of the German Regulations Authorising the Use of Vehicles for Road Traffic and the required approval according to § 29, paragraph 3 of the German Road Traffic Regulations.

6.1.1.1 Data required for the calculation (hitched machine)

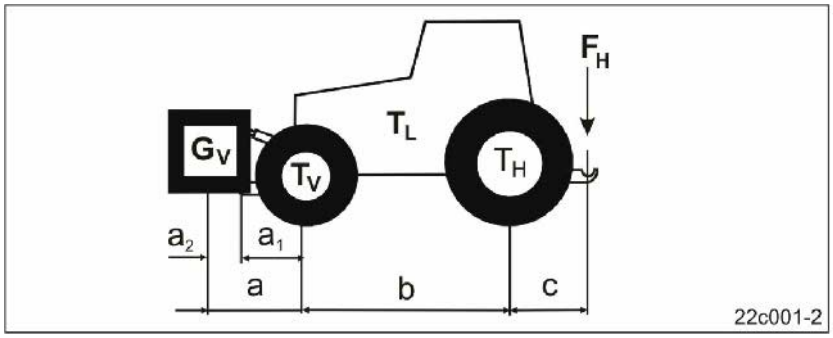

Fig. 126

T_L	[kg]	Tractor empty weight	See tractor operating manual or vehicle documentation
T_V	[kg]	Front axle load of the empty tractor	
T_H	[kg]	Rear axle load of the empty tractor	
G_V	[kg]	Front weight (if available)	See front weight in technical data, or weigh
F_H	[kg]	Maximum drawbar load	See section on " Technical data”
a	[m]	Distance between the centre of gravity of the front machine mounting or the front weight and the centre of the front axle (total $a_1 + a_2$)	See technical data of tractor and front machine mounting or front weight or measurement
a_1	[m]	Distance from the centre of the front axle to the centre of the lower link connection	See tractor operating manual or measurement
a_2	[m]	Distance between the centre of the lower link connection point and the centre of gravity of the front-mounted machine or front ballast (centre of gravity distance)	See technical data of front machine mounting or front weight or measurement
b	[m]	Tractor wheel base	See tractor operating manual or vehicle documents or measurement
c	[m]	Distance between the centre of the rear axle and the centre of the lower link connection	See tractor operating manual or vehicle documents or measurement

6.1.1.2 Calculation of the required minimum ballasting at the front $G_{V\,min}$ of the tractor for assurance of the steering capability

$$G_{V\ \min} = \frac{F_H \bullet c - T_V \bullet b + 0{,}2 \bullet T_L \bullet b}{a + b}$$

Enter the numeric value for the calculated minimum ballast $G_{V\,min}$, required on the front side of the tractor, in the table (section 6.1.1.7).

6.1.1.3 Calculation of the actual front axle load of the tractor $T_{V\,tat}$

$$T_{V\ tat} = \frac{G_V \bullet (a + b) + T_V \bullet b - F_H \bullet c}{b}$$

Enter the numeric value for the calculated actual front axle load and the approved tractor front axle load specified in the tractor operating manual in the table (section 6.1.1.7).

6.1.1.4 Calculation of the actual total weight of the combined tractor and machine

$$G_{tat} = G_V + T_L + F_H$$

Enter the numeric value for the calculated actual total weight and the approved total tractor weight specified in the tractor operating manual in the table (section 6.1.1.7).

6.1.1.5 Calculation of the actual rear axle load of the tractor $T_{H\,tat}$

$$T_{H\ tat} = G_{tat} - T_{V\ tat}$$

Enter the numeric value for the calculated actual rear axle load and the approved tractor rear axle load specified in the tractor operating manual in the table (section 6.1.1.7).

6.1.1.6 Tyre load capacity

Enter the double value (two tyres) of the approved load capacity (see, for example, tyre manufacturer's documentation) in the table (section 6.1.1.7).

6.1.1.7 Table

	Actual value according to calculation		Approved value according to tractor instruction manual		Double approved load capacity (two tyres)
Minimum ballast front / rear	/ kg		--		--
Total weight	kg	≤	kg		--
Front axle load	kg	≤	kg	≤	kg
Rear axle load	kg	≤	kg	≤	kg

- You can find the approved values for the total tractor weight, axle loads and load capacities in the tractor registration papers.
- The actually calculated values must be less than or equal to (≤) the permissible values!

WARNING

Risk of contusions, cutting, catching, drawing in and knocks through insufficient stability and insufficient tractor steering and brake power.

It is forbidden to couple the machine to the tractor used as the basis for calculation, if

- One of the actual, calculated values is greater than the approved value.
- There is no front weight (if required) attached to the tractor for the minimum front ballast ($G_{V\ min}$).

You must use a front weight, which is equal to at least the required minimum front ballast ($G_{V\ min}$).

6.1.2 Requirements for tractor operation with attached machines

WARNING

Risk of breakage during operation of components through unapproved combinations of connecting equipment!

Ensure:

- that the connection device on the tractor has a sufficient permissible noseweight for the noseweight actually in question
- that the axle loads and weights of the tractor altered by the drawbar load are within the approved limits. If necessary, weigh them.
- that the static actual rear axle load of the tractor does not exceed the permissible rear axle load
- that the permissible total weight of the tractor is complied with
- that the approved load capacities of the tractor tyres are not exceeded.

6.2 Securing the tractor / machine against unintentional start-up and rolling

WARNING

Risk of contusions, cutting, catching, drawing in and knocks when making interventions in the machine through

- **Unintentional lowering of the unsecured machine when it is raised via the three-point hydraulic system of the tractor**
- **Unintentional lowering of raised, unsecured parts of the machine**
- **Unintentional start-up and rolling of the tractor-machine combination.**
- Secure the tractor and the machine against unintentional start-up and rolling before any intervention in the machine.
- It is forbidden to make any intervention in the machine, such as installation, adjustment, troubleshooting, cleaning, maintenance and repairs
  - while the machine is being driven
  - as long as the tractor engine is running with a connected PTO shaft / hydraulic system.
  - if the ignition key is inserted in the tractor and the tractor engine can be started unintentionally with the PTO shaft / hydraulic system connected
  - if the tractor and machine are not secured with their respective parking brakes and/or wheel chocks against unintentional rolling away
  - if moving parts are not blocked against unintentional movement

  When carrying out such work, there is a high risk of contact with unsecured components.

1. Park the tractor and the machine on solid, level ground only.
2. Lower the raised, unsecured machine / raised, unsecured parts of the machine.

   → This is how to prevent unintentional falling:
3. Shut down the tractor engine.
4. Remove the ignition key.
5. Apply the tractor parking brake.
6. Secure the machine with wheel chocks against unintentionally rolling away.

6.3 Adjusting the length of the PTO shaft to the tractor

WARNING

Danger of crushing from unintentional

- **Rolling of the tractor and the coupled machine!**
- **Lowering of the lifted machine!**

Secure the tractor and machine from unintentional starting and unintentional rolling and secure the lifted machine from unintentional lowering before entering the danger zone between the tractor and lifted machine in order to adjust the PTO shaft.

WARNING

Dangers exist from damaged and/or destroyed, flying parts if the PTO shaft is upended or pulls apart while the machine coupled to the tractor is being raised/lowered or while turning corners because the length of the PTO shaft has not been adjusted properly.

Have the length of the PTO shaft checked in all operating positions by a specialist workshop and, if necessary, adjusted before coupling the PTO shaft to your tractor for the first time. In this way, you prevent upending of the PTO shaft or insufficient profile overlap.

This adjustment of the PTO shaft applies only for the current tractor type. You have to readjust the PTO shaft if you couple the machine to another tractor.

When adjusting the PTO shaft, it is mandatory to observe the operating manual from the PTO shaft manufacturer.

WARNING

Danger of being caught and drawn in if the PTO shaft is installed incorrectly or if unauthorised structural changes are made.

Only a specialist workshop may make structural changes to the PTO shaft. In this regard, observe the operating manual of the PTO shaft manufacturer.

Adjusting the length of the PTO shaft is permitted with consideration of the minimum profile overlap.

Structural changes to the PTO shaft that are not described in the operating manual from the PTO shaft manufacturer are not permitted.

While driving straight ahead, the PTO shaft is long, e.g. during work or for road transport.

When turning corners on the field, the PTO shaft is very short relative to when driving straight ahead.

Check to ensure that the PTO shaft does not strike against the universal joints in all driving situations, particularly in a 90° curve.

1. Couple the tractor to the machine.
2. Limit the lateral movement of the tractor lower links.
3. Connect the PTO shaft.
4. Slowly bring the tractor and machine into a 90° curve (see Fig. 127). Stop the operation immediately if there is a danger of collision.

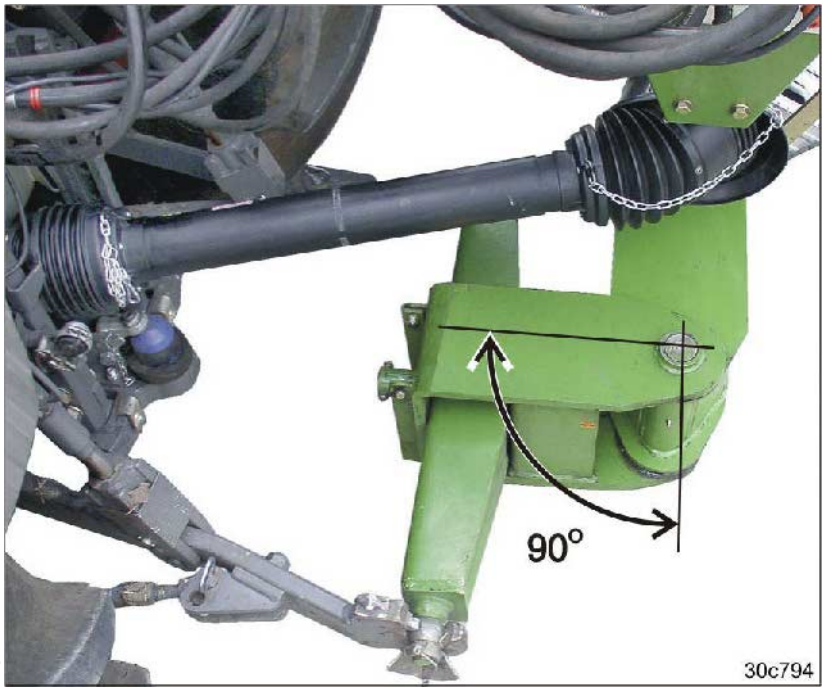

Fig. 127

The PTO shaft must not collide with the universal joints!

Stop the operation immediately if there is a danger of collision. Shorten the PTO shaft according to the specifications of the PTO shaft manufacturer.

Repeat the operation until the turning operation with a 90° curve is possible without damaging the PTO shaft.

5. Bring the machine into road transport position (Fig. 128), i.e. straighten the combination.
6. Apply the tractor parking brake, switch off the tractor engine and remove the ignition key.
7. Check to ensure that the PTO shaft meets the requirements of the PTO shaft manufacturer.
   The minimum overlap when driving straight ahead must be at least 250 mm (see Fig. 128).

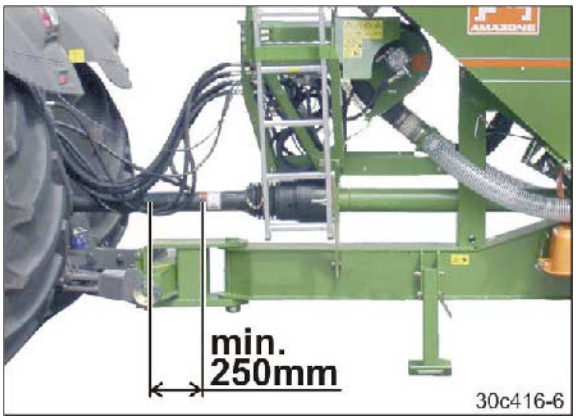

Fig. 128

6.4 Installation regulations for the hydraulic fan drive connection

The banking-up pressure of 10 bar must not be exceeded. The installation regulations therefore have to be complied with when connecting the hydraulic fan connection.

- Connect the hydraulic coupling of the pressure line (Fig. 129/5) to a single-acting or double-acting tractor control unit with priority.
- Connect the large hydraulic coupling of the return line (Fig. 129/6) only to an unpressurised tractor connection with direct access to the hydraulic fluid tank (Fig. 129/4).
  In order that the banking-up pressure of 10 bar is not exceeded, do not connect the return line to a tractor control unit.
- For retro-installation of the tractor return line, use only piping with ND 16, e.g. 20 id. x 2.0 mm with a short return path to the hydraulic fluid tank.

The output of the tractor's hydraulic pump must be at least 80 l/min. at 150 bar.

Fig. 129/...

(A)	On the machine face
(B)	On the tractor face
(1)	Hydraulic fan motor $N_{max.}$ = 4000 rpm.
(2)	Filter
(3)	Single-acting or double-acting control unit with priority
(4)	Hydraulic fluid tank
(5)	Feed line: pressure line with priority (marking: 1 cable tie, red)
(6)	Return line: unpressurised line with "large" push-fit coupling (marking: 2 cable ties, red)

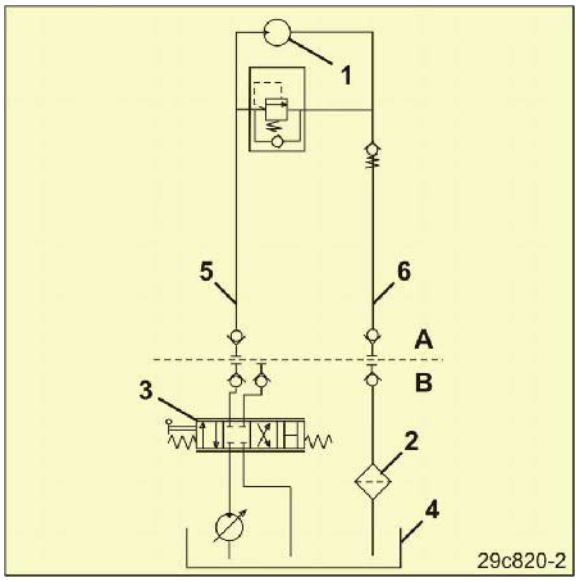

Fig. 129

The hydraulic fluid must not overheat.

High oil flow rates in conjunction with small oil tanks encourage rapid heating-up of the hydraulic fluid. The capacity of the tractor's oil tank (Fig. 129/4) should be at least twice the oil flow rate. If the hydraulic fluid heats up excessively, the installation of an oil cooler is required at a specialist workshop.

If a second hydraulic motor is driven besides the hydraulic fan motor, both motors have to be wired in parallel. If both motors are wired in series, the permissible oil pressure of 10 bar is always exceeded behind the first motor.

6.5 Initial installation of the holders for the road safety bar

Screw the two holders (Fig. 130/1) onto the exact harrow (Fig. 130/2).

> During work, fasten the road safety bars (Fig. 131/2) to the holders (Fig. 131/1).

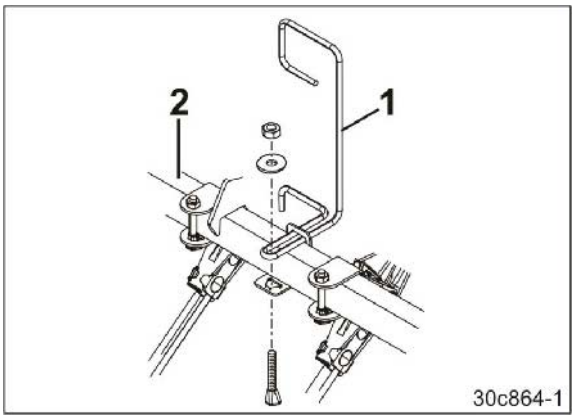

Fig. 130

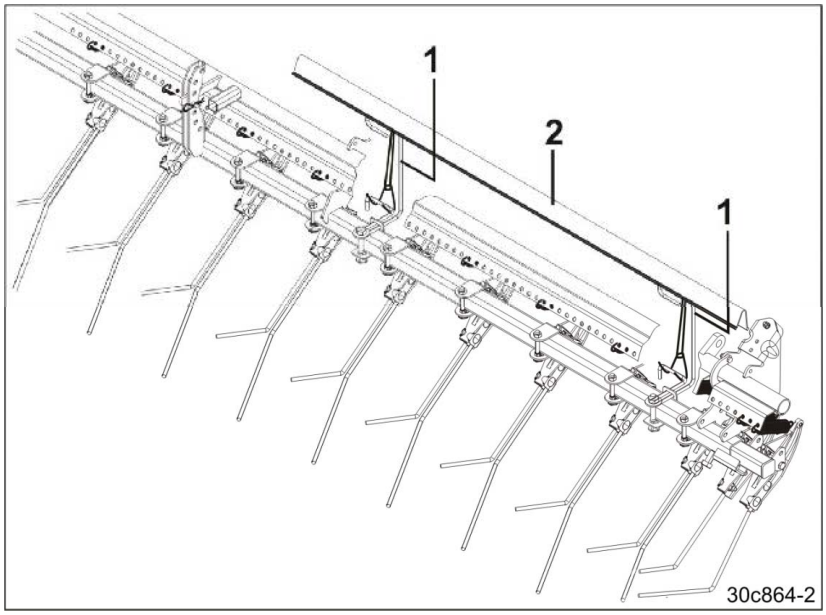

Fig. 131

6.6 Initial installation of the AMATRON+

Install the terminal (Fig. 132) of the AMATRON+ in the tractor cab with the aid of the AMATRON+ operating manual .

Fig. 132

7 Coupling and uncoupling the machine

When coupling and uncoupling the machine take heed of the section “Safety information for users”.

WARNING

Risk of contusions from unintentional starting and rolling of the tractor and machine when coupling or uncoupling the machine!

When coupling or uncoupling the machine, secure the tractor and machine against unintentional start-up and rolling before entering the danger area between the tractor and machine.

WARNING

Risk of contusions between the rear of the tractor and the machine when coupling and uncoupling the machine!

Only actuate the operator controls for the tractor's three-point hydraulic system

- From the workplace provided.
- If you are outside the danger area between the tractor and the machine.

7.1 Coupling the machine

WARNING

Danger of breaking during operation, insufficient stability and insufficient tractor steering and braking power on improper use of the tractor!

You may only connect the machine to tractors suitable for the purpose.

WARNING

Risk of contusions when coupling the machine and standing between the tractor and the machine!

Instruct people to leave the danger area between the tractor and the machine before you approach the machine.

Any helpers may only act as guides standing next to the tractor and the machine, and may only move between the vehicles when both are at a standstill.

WARNING

Risk of contusions, cutting, catching, drawing in and knocks when the machine unexpectedly releases from the tractor!

- Use the intended equipment to connect the tractor and the machine in the proper way.
- When coupling the machine to the tractor's three-point hydraulic system, ensure that the attachment categories of the tractor and the machine are the same.

WARNING

Risk of energy supply failure between the tractor and the machine through damaged power lines!

During coupling, check the course of the power lines. The supply lines

- Must give slightly without tension, bending or rubbing on all movements of the connected machine.
- Must not chafe against other parts.

DANGER

Whenever the machine is separated from the tractor, secure it using 2 wheel chocks.

DANGER

The lower link of the tractor must not have any lateral play so that the machine always runs centrically behind the tractor and does not knock back and forth!

CAUTION

Do not make any machine connections until the tractor and machine are coupled, the tractor engine is shut down, the tractor parking brake applied and the ignition key removed!

Do not connect the supply line (red) of the service brake to the tractor until the tractor engine is shut down, the tractor parking brake is applied and the ignition key is removed!

The Cirrus can be coupled or uncoupled whether it is folded in or out.

Always retract the integrated running gear beforehand (lower the machine). When the machine is uncoupled and the running gear is extended (machine raised) the pressure in the supply line can increase so much that later coupling to the tractor becomes impossible.

WARNING

Do not remove the wheel chocks until the Cirrus is connected to the tractor's lower links and the tractor parking brake is applied.

1. Check whether the Cirrus is secured with 2 wheel chocks (Fig. 133/1) on one side of the machine under the outer wedge ring tyres.

Fig. 133

2. Fasten one ball sleeve (Fig. 134/1) with a catch shell over each lower link pin of the drawbar and secure it using a lynch pin. (Tractor mount category, see Technical Data)

   The balls of the lower linkage are dependent on the tractor type (see tractor operating manual).

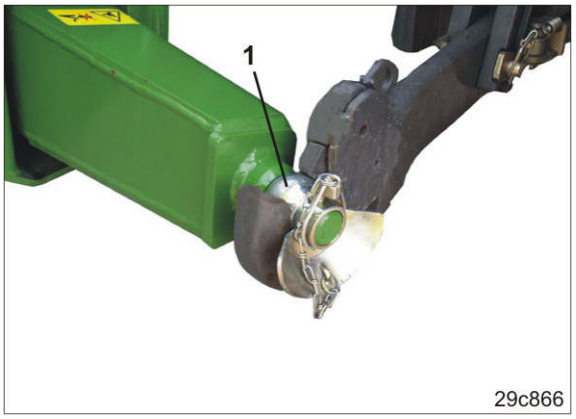

Fig. 134

CAUTION

Danger of getting crushed in the area of the moving draw rail.

3. Open the tractor lower link securing device, i.e. it must be ready for coupling.
4. Align the lower link hooks so that they are flush with the linking points of the machine.
5. Direct people out of the danger area between the tractor and machine before you approach the machine with the tractor.
6. Drive the tractor in reverse up to the machine so that the lower link hooks of the tractor automatically pick up the ball of the machine.

   → The lower link hooks lock automatically.
7. Check whether the securing device of the tractor's lower link locking system is closed and secured (see tractor's operating manual).
8. Lift the tractor's lower link until the stand (Fig. 135/1) is free of the ground.
9. Secure the tractor against unintentional starting and unintentional rolling away.
10. Check whether the PTO shaft of the tractor is switched off.
11. Apply the tractor parking brake, switch off the tractor engine and remove the ignition key.
12. Connect the PTO shaft (see section on "Coupling the PTO shaft to the tractor" on page 78).
13. Depending on the equipment configuration, couple the following to the tractor:
    - The brake and supply line of the dual-circuit pneumatic braking system (see section on "Coupling the brake and supply lines", on page 67)
    - The hydraulic connector of the hydraulic service brake system (see section on "Hydraulic operating brake system", on page 72).
14. Connect the supply lines to the tractor (see section 7.1.1 to 7.1.2, from on page 128).

15. Remove the bolt (Fig. 135/1).

Fig. 135

16. Hold the stand by the handle (Fig. 136/1) and fold it up.
17. Locate the stand using the pin (Fig. 136/2), then secure with the lynch pin.

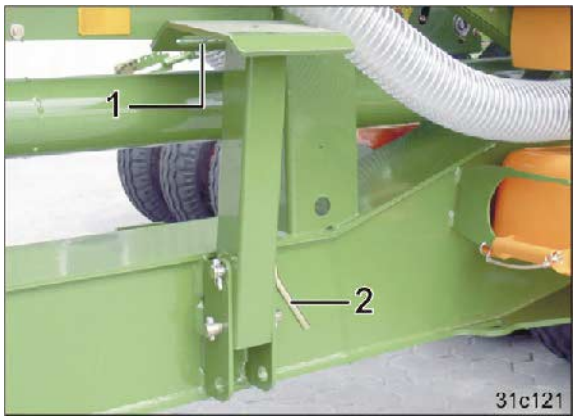

Fig. 136

Check the route of the supply lines.

The supply lines:

- Must easily give way to all movements in bends without tensioning, kinking or rubbing.
- Must not chafe against other parts.

18. Check the function of the braking and lighting system.
19. Push the wheel chocks onto the mountings and secure them with lynch pins (Fig. 137/1).
20. Before commencing a run, perform a braking test.

Fig. 137

7.1.1 Connecting the hydraulic connections

Clean the hydraulic couplings before connecting them to the tractor. Minor oil impurities from particles can cause a failure of the hydraulic system.

Tractor-side			Machine-side (Cirrus Activ)						
				Fig. 45/…	Running direction	Marking			Function
Tractor control unit	1	Double-acting	Hydraulic line	(1)	Feed line	Cable tie	1	Yellow	o Lifting/lowering the rotary cultivator o Lifting/lowering the integrated running gear o Actuating the track marker o Actuating the pre-emergence marker
				(1a)	Return line		2		
	2	Double-acting		(2)	Feed line		1	Green	o Folding the machine extension arms o Adjusting the exact harrow / coulter pressure
				(2a)	Return line		2		
	3	Double-acting		(3)	Feed line		1	Blue	o Folding the rotary cultivator o Hydr. working depth adjustment of rotary cultivator
				(3a)	Return line		2		
	4	Single-acting or double-acting		(4)	Feed line [1]		1	Red	Hydraulic fan motor
Pressureless line				(5)	Return line [2]		2		

[1] Pressure line with priority

[2] Pressureless line.

- During work the tractor control unit 1 is actuated more frequently than any other control units. Assign the connections of control unit 1 to an easily reachable control unit in the tractor cab.
- Tractors with constant pressure hydraulic systems are designed only conditionally for the operation of hydraulic motors. Take heed of the recommendations of the tractor manufacturer.

7.1.2 Making additional connections

Connection/function	Installation information
Plug (7-pin) for the road traffic lighting system	
AMATRON+ machine connector	Plug the connector into the terminal as described in the AMATRON+ operating manual.
Dual-circuit service braking system:	
Hydraulic braking system:	The hydraulic braking system is not allowed in Germany and several other EU countries!

7.2 Uncoupling the machine

WARNING

Risk of contusions, cutting, catching, drawing in and knocks through insufficient stability and possible tilting of the uncoupled machine!

Set the empty machine down on a horizontal parking area with a firm base.

When uncoupling the machine, there must always be enough space in front of the machine, so that you can align the tractor with the machine if necessary.

Uncoupling the machine:

1. Align the tractor and machine straight and park the empty machine on a horizontal parking surface with a firm base.
2. Check whether the PTO shaft of the tractor is switched off.
3. Disable the tramline counter (see AMATRON+ operating manual).
4. Retract the integrated running gear (lower the machine). Here the machine can be coupled or uncoupled.
5. Press the button (Fig. 138/1).

→. Switch off the AMATRON+.

6. Apply the tractor parking brake, switch off the tractor engine and remove the ignition key.
7. Hold the stand tightly by the handle and remove the positioning bolt.
8. Fold down the stand and position it using the positioning bolt (Fig. 139/1).
9. Secure the positioning bolt with the lynch pin.

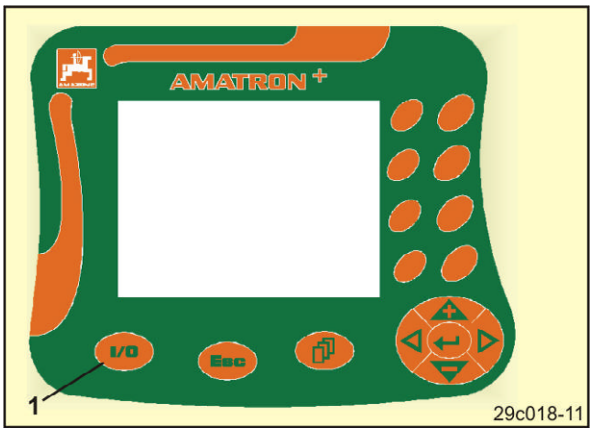

Fig. 138

Fig. 139

10. Remove the lynch pins (Fig. 140/1) and remove the wheel chocks from the transport brackets.

Fig. 140

11. Secure the Cirrus with both wheel chocks (Fig. 141/1) under the outer wedge ring tyres.

DANGER

Always secure the machine with 2 wheel chocks before you uncouple the machine from the tractor!

Fig. 141

12. Depending on the equipment configuration, uncouple the following from the tractor:
    - The brake line and the supply line of the dual-circuit pneumatic braking system
    - The hydraulic connector of the hydraulic service brake system.

When uncoupling the pneumatic brake lines first of all disconnect the red hose coupling (supply line) and then the yellow hose coupling (brake line) from the tractor!

13. Uncouple all supply lines from the tractor.
14. Close the hydraulic connectors with protective caps.
15. Fasten all supply lines to the mountings (Fig. 142).

Fig. 142

16. Uncouple the PTO shaft from the tractor universal joint shaft (see section "Uncoupling the PTO shaft from the tractor" on page 79).

17. Set the machine down on the stand.

> **WARNING**
>
> **Set the machine down on a horizontal, firm base only!**
>
> **Ensure that the stand does not sink into the ground. If the stand does sink into the ground, it will be impossible to recouple the machine!**

Fig. 143

18. Open the securing device (Fig. 144) of the tractor's lower link (see tractor operating manual).
19. Uncouple the tractor's lower link.
20. Pull the tractor forwards.

> **DANGER**
>
> **While pulling the tractor forwards no personnel are allowed to be between the tractor and the machine!**

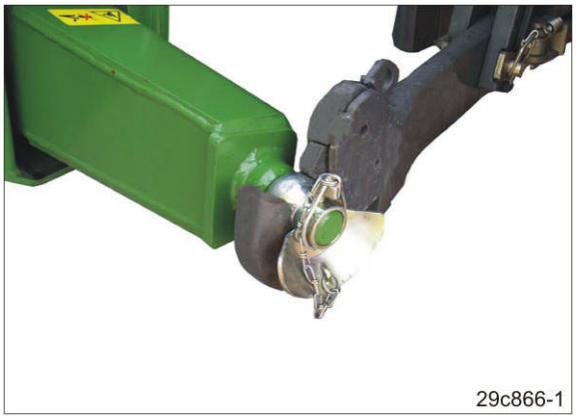

Fig. 144

> **CAUTION**
>
> **Danger of getting crushed in the area of the moving draw rail.**

8 Settings

WARNING

Risk of contusions, cutting, catching, drawing in and knocks through

- **Unintentional falling of the machine raised using the tractor's three-point hydraulic system.**
- **Unintentional falling of raised, unsecured machine parts.**
- **Unintentional start-up and rolling of the tractor-machine combination.**

Secure the tractor and the machine against unintentional starting and rolling away before you make any adjustments to the machine.

DANGER

Before adjustment tasks (unless otherwise specified):

- **Fold out the booms**
- **Switch off the tractor universal joint shaft.**
- **Wait until the tool carriers have come to a complete stop.**
- **Lower the machine,**
  i.e. retract the integrated running gear
- **Shut off the tractor engine**
- **Apply the tractor parking brake**
- **Take out the ignition key**
- **Do not touch hot gearbox parts; wear gloves.**

8.1 Setting the level sensor

1. Apply the tractor parking brake, switch off the tractor engine and remove the ignition key.
2. Climb the steps (Fig. 145) into the seed hopper.

Fig. 145

3. Release the wing nuts (Fig. 146/2).
4. Adjust the height of the level sensor (Fig. 146/1) to the required seed volume.

   The AMATRON+ emits an alarm when the level sensor is no longer covered with seed.
5. Tighten the wing nuts (Fig. 146/2).

Fig. 146

Only machines with two metering units:

6. Repeat the setting on the second level sensor.
   Fasten the two level sensors at the same height in the seed hopper.

Increase the residual seed volume, which triggered the alarm:

- the greater the sowing rate
- the greater the working width.

8.2 Inserting dosing roller in metering unit

1. Remove the clip pin (Fig. 147/2) (only necessary when the seed hopper is full to seal the hopper with the slider (Fig. 147/1).

> The dosing rollers can be replaced more easily, if the seed hopper is empty.

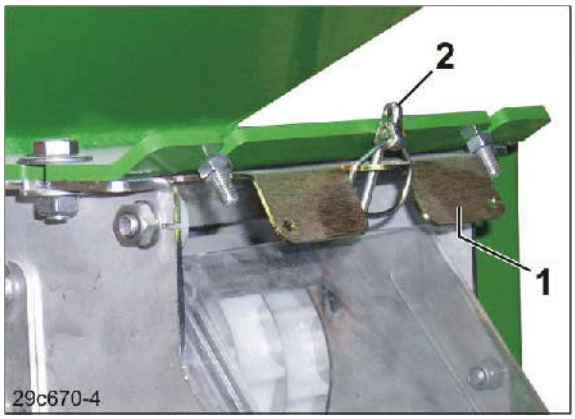

Fig. 147

2. Push the slider (Fig. 148/1) into the dosing unit up to the stop.

→ The slider seals the seed hopper. Seed cannot pour out inadvertently when the dosing roller is replaced.

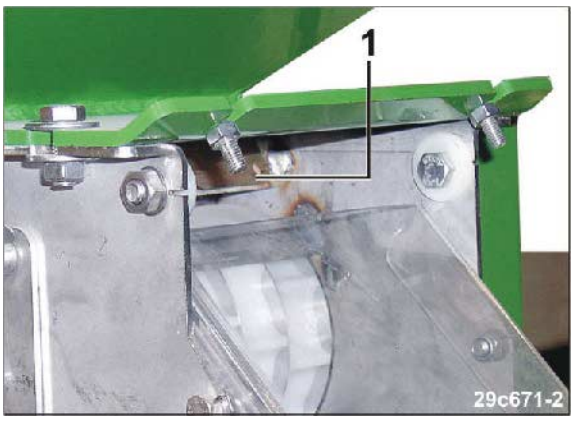

Fig. 148

3. Slacken but do not unscrew the two winged nuts (Fig. 149/1).
4. Turn the bearing cover and pull it off.

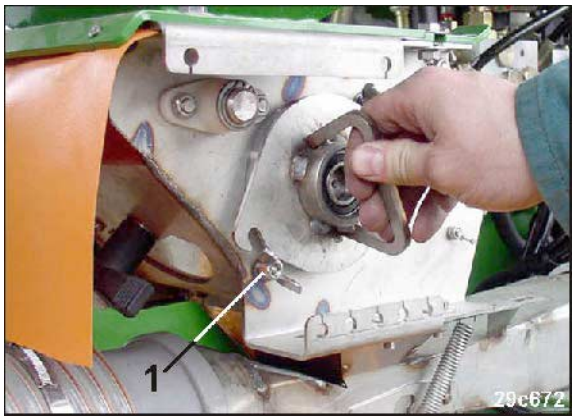

Fig. 149

5. Pull the dosing roller out of the seed dosing unit.
6. Refer to table for the required dosing roller and install in the reverse order.

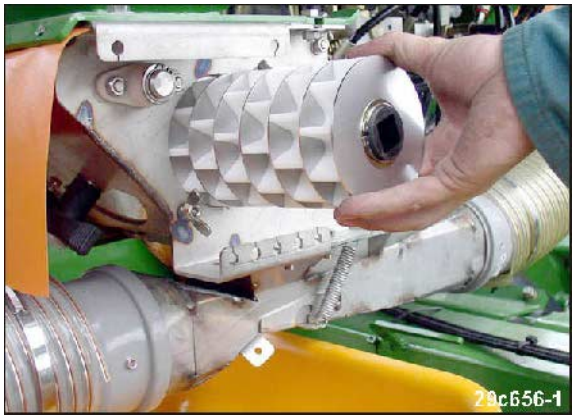

Fig. 150

7. Repeat the procedure for the second dosing unit (if fitted). Equip both seed dosing units with the same dosing roller.

Don't forget to open all sliders (Fig. 147/1).

Secure each slider with a lynch pin (Fig. 147/2).

8.3 Setting the sowing rate with a calibration test

1. Fill the seed hopper with at least 200 kg of seed (correspondingly less for fine seed).
2. Lower the machine fully by moving in the integrated running gear completely. Here the machine can be coupled or uncoupled.

CAUTION

Disengage the tractor universal joint shaft, engage the tractor parking brake, shut off the tractor engine and remove the ignition key.

3. Remove the calibration troughs from the transport bracket.

   Each calibration trough is fastened in a holder for transport and secured with a lynch pin (Fig. 151/1).

Fig. 151

4. Push a calibration trough into the mounting under each seed dosing unit.
5. Open the injector sluice flaps (Fig. 152/1) on all seed dosing units.

Fig. 152

CAUTION

Crushing hazard when opening and closing the injector sluice flap (Fig. 153/1)!

Hold the injector sluice flap only by the lug (Fig. 153/2), as otherwise there is a danger of injury when the spring-loaded injector sluice flap snaps closed.

Never insert your hand between the injector sluice flap and the injector sluice!

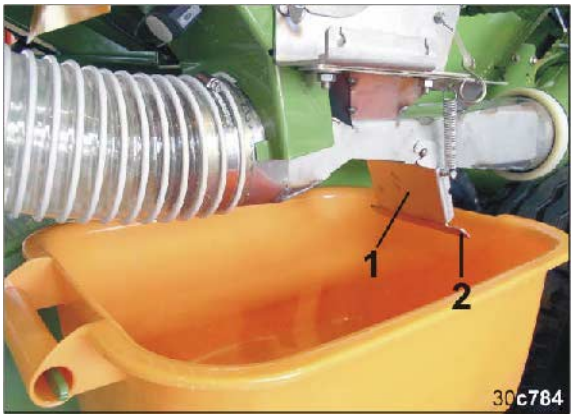

Fig. 153

6. Adjust the desired sowing rate in the AMATRON+.
   - 6.1 Open the menu "Job".
   - 6.2 Select the job number.
   - 6.3 Enter the job name (optional).
   - 6.4 Enter job notes (optional).
   - 6.5 Enter the seed type.
   - 6.6 Enter the 1000 grain weight (required only with a grain meter).
   - 6.7 Enter the desired sowing rate.
   - 6.8 Start the job (press the "Start job" button).
   - 6.9 Adjust the sowing rate with calibration test as described in the AMATRON+ operating manual (see section "Calibrating machines with electric full dosing").

The number of engine revolutions for the calibration test until the signal tone sounds is governed by the sowing rate:

0 to 14.9 kg	→	Engine revolutions to 1/10 ha
15 to 29.9 kg	→	Engine revolutions to 1/20 ha
30 kg or more	→	Engine revolutions to 1/40 ha.

7. Secure the calibration trough(s) on the transport bracket.
8. Secure each calibration trough using a lynch pin.
9. Close the injector sluice flap(s) with special care.

8.4 Adjusting blower fan speed

Set the target blower fan speed:

- via the tractor's flow control valve
- On the pressure relief valve of the blower fan hydraulic motor if the tractor does not have a flow control valve.

Set the following in the AMATRON+:

- The target blower fan speed
- The deviation from the target blower fan speed (in percent) at which the alarm is to be triggered.

Fig. 154

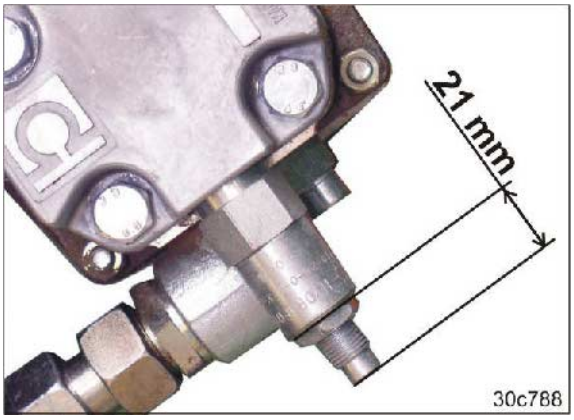

Fig. 155

8.4.1 Setting the fan speed via the flow control valve of the tractor

1. Unscrew the lock nut (Fig. 154/2).
2. Adjust the pressure relief valve (Fig. 154/1) to the factory-set dimension of 21 mm (Fig. 155).
   2.1 Turn the screw accordingly using the hexagon socket wrench (Fig. 154/3).
3. Tighten the lock nut (Fig. 154/2).
4. Set the target blower fan speed on the flow control valve of the tractor.

8.4.2 Adjust the blower speed on the machine pressure limiting valve

1. Unscrew the lock nut (Fig. 154/2).
2. Adjust the target blower fan speed on the pressure relief valve (Fig. 154/3) using the pressure relief valve.

   Do not allow the dimension to fall below 21 mm (Fig. 155)!

Fan speed	
Turning to the right:	increases the target blower fan speed.
Turning to the left:	reduces the target blower fan speed.

3. Tighten the lock nut (Fig. 154/2).

8.4.3 Setting the fan speed monitoring on the AMATRON+

Set the fan speed monitoring on the Machine Data menu (see AMATRON+ operating manual)

- input the fan speed (rpm) that is to be monitored or
- adopt the current fan speed (rpm) during operation as the speed to be monitored.

8.4.3.1 Triggering of the alarm, if the fan speed differs from the setpoint

Setting of the alarm, if the fan speed differs from the setpoint in the Basic Data menu (see AMATRON+ operating manual).

The gradual percentage deviation [± 10 (%)] from the setpoint has to be set.

8.5 Setting the coulter pressure

WARNING

Direct people out of the danger area.

1. Select the coulter pressure button in the AMATRON+ and, by actuating control unit 2,
   - o admit pressure to the hydraulic cylinder or
   - o put it in float position.
2. Apply the tractor parking brake, switch off the tractor engine and remove the ignition key.
3. Insert one pin (Fig. 156/1) below and above the stop (Fig. 156/2) into the adjuster segment and secure with clip pins.

The further the hydraulic cylinder can extend, the greater the coulter pressure.

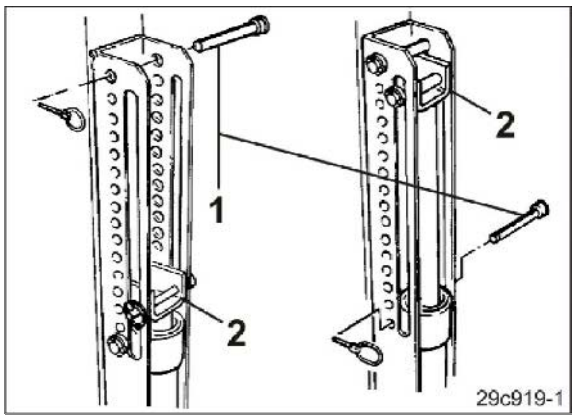

Fig. 156

This setting influences the planting depth of the seed.

Check the planting depth of the seed after every adjustment.

The pressure gauge (Fig. 157/1) indicates if the coulters are pressurised with increased pressure.

Fig. 157

8.5.1 Adjusting the RoTeC+ plastic discs

If it is not possible to achieve the desired planting depth as described, adjust all RoTeC plastic discs evenly in accordance with the table (Fig. 158).

Thus the plastic disc can engage in three positions or be removed from the RoTeC coulter.

Then readjust the placement depth.

This setting influences the placement depth of the seed.
Check the placement depth of the seed after each adjustment.

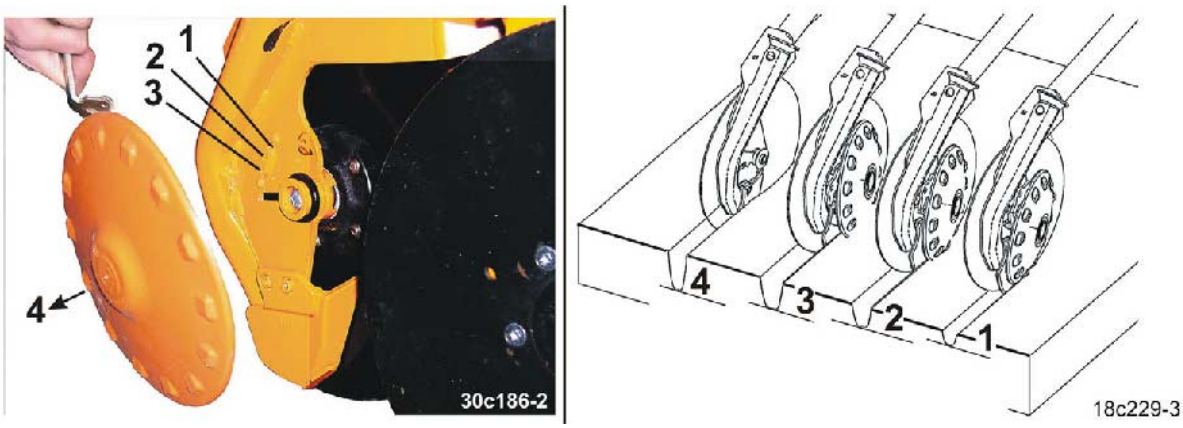

1	Engagement position 1	Placement depth approximately 2 cm
2	Engagement position 2	Placement depth approximately 3 cm
3	Engagement position 3	Placement depth approximately 4 cm
4	Sowing without plastic disc	Placement depth > 4 cm

Fig. 158

Engagement position 1 to 3

1. Engage the handle (Fig. 159/1) in one of the 3 positions.

Fig. 159

Sowing without plastic disc

1. Turn the handle beyond the engagement catch (Fig. 160/1) and remove the plastic disc from the RoTeC coulter.

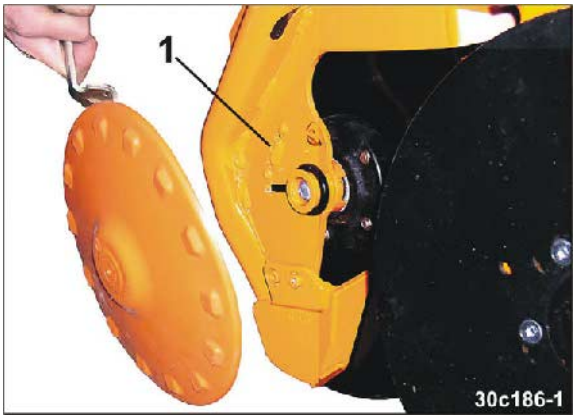

Fig. 160

Installing RoTeC plastic disc

Secure the RoTeC plastic disc with the designation

- "K" on the short coulter
- "L" on the long coulter.

1. Push the plastic disc from below against the catch on the RoTeC coulter.
   The shoulder must grip in the slot.
2. Pull the handle to the rear and upwards beyond the notches.
   A light blow on the centre of the disc helps to latch it into position.

8.6 Adjusting the exact harrow

Check the work results after each adjustment.

8.6.1 Adjusting the harrow tines

Adjust the harrow tines [see Table (Fig. 162), below].

It is adjusted by turning the crank (Fig. 161/1) on all adjuster segments.

1. Set the machine on the field to its working position.
2. Disengage the tractor universal joint shaft, engage the tractor parking brake, shut off the tractor engine and remove the ignition key.
3. Carry out the same settings on all adjuster segments.

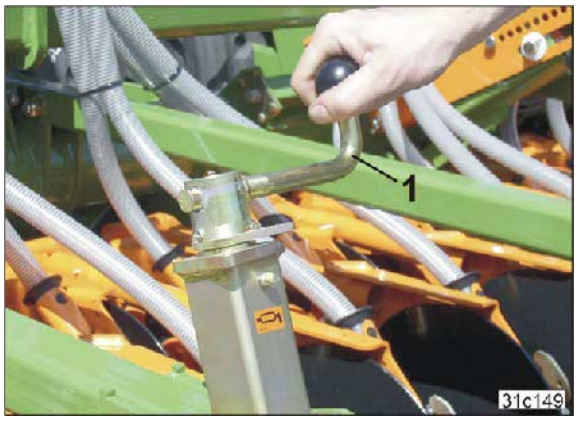

Fig. 161

Distance "A"	**230 to 280 mm**

When correctly set, the harrow tines of the exact harrow should:

- lie horizontally on the ground and
- have 5 - 8 cm free floating space beneath.

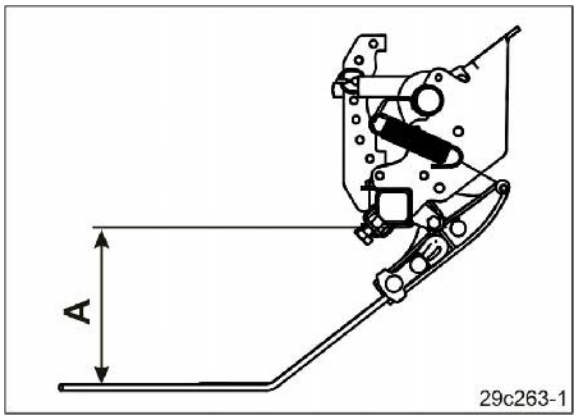

Fig. 162

8.6.2 Setting the exact harrow pressure

1. Tension the lever (Fig. 163/1) with the calibration crank.
2. Insert the bolt (Fig. 163/2) into a boring under the lever.
3. Relieve the lever.
4. Secure the bolt with a spring pin.
5. Apply the same setting to all adjuster segments.

Fig. 163

8.6.2.1 Setting the exact harrow pressure (hydraulic adjustment)

WARNING

Direct people out of the danger area.

1. Select the coulter pressure button in the AMATRON+ and, by actuating control unit 2,
   - o admit pressure to the hydraulic cylinder or
   - o put it in float position.
2. Disengage the tractor universal joint shaft, engage the tractor parking brake, shut off the tractor engine and remove the ignition key.
3. Insert one pin each (Fig. 164/1) under and over the lever into the adjuster segment and secure it with safety splints.

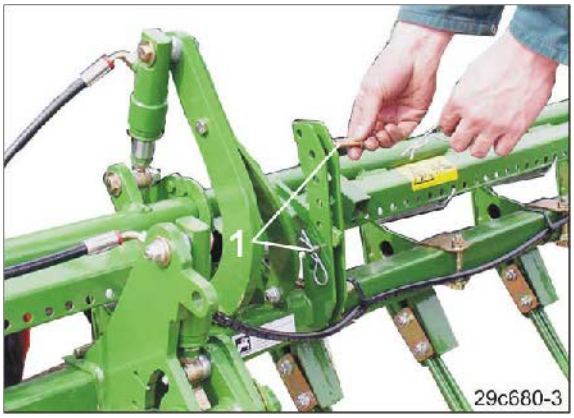

Fig. 164

8.7 Roller harrow

DANGER

Carry out the adjustments only with the tractor universal joint shaft shut off, the tractor parking brake applied, the engine shut off and the ignition key removed!

Check the work results after each adjustment.

8.7.1 Setting working depth and angle of harrow tines

1. Raise the machine above the integrated running gear only enough so that the harrow tines are immediately above the ground, but not touching it.
2. Apply the tractor parking brake, switch off the tractor engine and remove the ignition key.
3. Hold the harrow tines beam by the carrier handle (Fig. 165/3).
4. Set the working depth of the harrow tines by positioning the carrying arm with the bolt (Fig. 165/1)
   - in all segments
   - in the same hole.

The deeper the pin is inserted in the adjuster segment, the greater the work depth.

5. After each repositioning, secure the pin with safety splint.

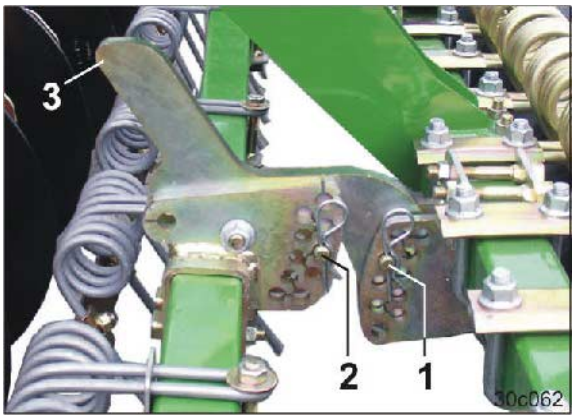

Fig. 165

6. Change the arrangement angle of the harrow tines to the ground by repositioning the bolt (Fig. 166/2)
   - in all segments
   - in the same hole.

   Ensure that the pin (Fig. 166/2) is positioned below the carrier (Fig. 166/3) in the adjuster segment.

The deeper the pin (Fig. 166/2) is inserted in the adjuster segment, the flatter the angle.

7. After each repositioning, secure the pin (Fig. 166/2) with safety splint.

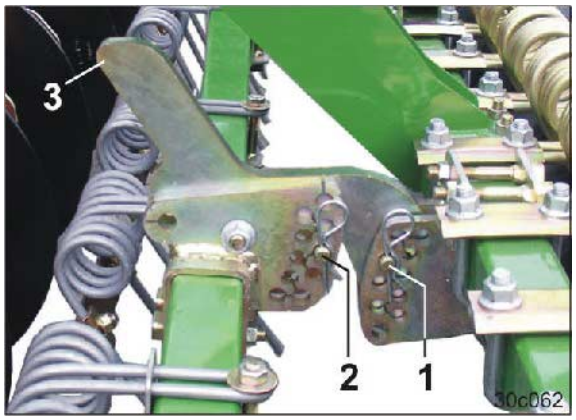

Fig. 166

8. After each repositioning, secure the pin (Fig. 166/2) with safety splint.
9. Das integrierte Fahrwerk einfahren, d.h. die Maschine vollkommen absenken.

8.7.2 Adjusting the roller pressure

It is adjusted by turning the crank (Fig. 167/1) on all adjuster segments.

1. Set the machine on the field to its working position.
2. Disengage the tractor universal joint shaft, engage the tractor parking brake, shut off the tractor engine and remove the ignition key.
3. Carry out the same settings on all adjuster segments.

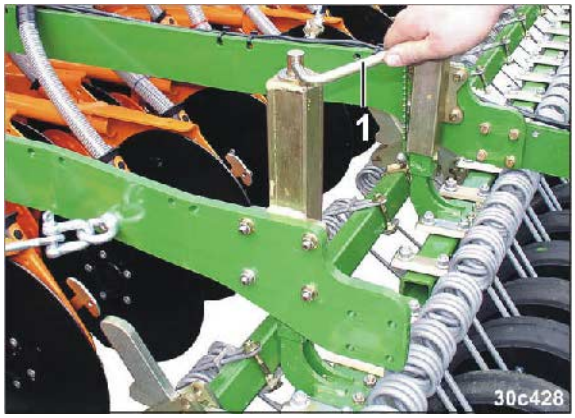

Fig. 167

8.8 Adjusting the working depth of the rotary cultivator (on the field)

Adjust the rotary cultivator working depth immediately before starting work on the field.

DANGER

- **Carry out the adjustments only if the following apply:**
  - **The tractor universal joint shaft is disengaged.**
  - **The tractor parking brake is applied.**
  - **The tractor engine is shut off.**
  - **The ignition key has been removed.**
- **Wait until the tool carriers have come to a complete stop.**

1. Fold the machine extension arms out.
2. Raise the machine by moving the integrated running gear out completely.
3. Disengage the tractor universal joint shaft, engage the tractor parking brake, shut off the tractor engine and remove the ignition key.

4. Pin the depth limiter (Fig. 168/1) in the desired position.
5. Secure the pin (Fig. 168/2) using a lynch pin.

The machine has four segments for adjusting the working depth. Set the same working depth on all segments.

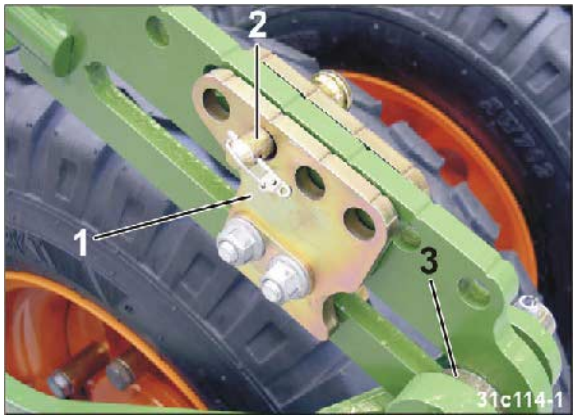

Fig. 168

6. Direct people out of the danger area.
7. Lower the machine.

→ The brackets (Fig. 168/3) rest on the depth limiters (Fig. 168/1).

8.9 Presetting the hydraulic working depth adjustment of the rotary cultivator (optional)

DANGER

- **Carry out the adjustments only if the following apply:**
  - **The tractor universal joint shaft is disengaged.**
  - **The tractor parking brake is applied.**
  - **The tractor engine is shut off.**
  - **The ignition key has been removed.**
- **Wait until the tool carriers have come to a complete stop.**

1. Fold the machine extension arms out.
2. Pressurise the hydraulic cylinders (Fig. 169/1).
   2.1 Actuate tractor control unit 3.

WARNING

Disengage the tractor universal joint shaft, engage the tractor parking brake, shut off the tractor engine and remove the ignition key.

3. Withdraw the pin (Fig. 169/2).
4. Adjust the stops (Fig. 169/3) according to the desired working depth.
5. Insert the pin and secure it using a safety splint.

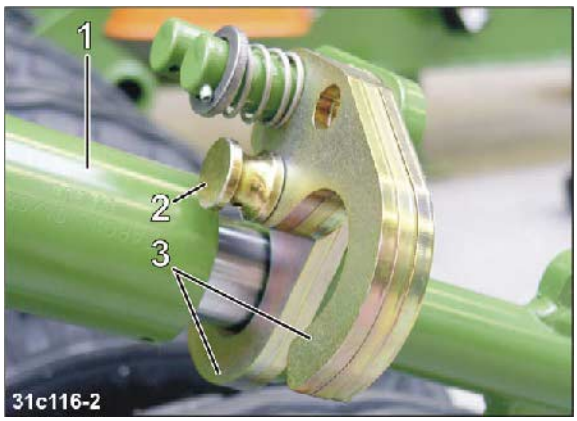

Fig. 169

8.10 Adjusting the side panels

DANGER

- **Carry out the adjustments only with the tractor universal joint shaft disengaged, the engine shut off, the tractor parking brake applied and the ignition key removed.**
- **Wait until the tool carriers have come to a complete stop.**

Height adjustment:

For height adjustment, the side panel (Fig. 170/1) is fastened using two screws (Fig. 170/2).

Fig. 170

Adjusting the spring tension

6. Release the lock nut.
7. Adjust the tension of the spring (Fig. 171/1) by turning the nut (Fig. 171/2).
8. Tighten the lock nut.

Fig. 171

8.11 Adjusting the levelling bar

DANGER

- **Carry out the adjustments only with the tractor universal joint shaft disengaged, the engine shut off, the tractor parking brake applied and the ignition key removed.**
- **Wait until the tool carriers have come to a complete stop.**

1. Attach the extension pipe (Fig. 172/1) to the lever (Fig. 172/2) in reversed position and secure it using the lynch pin (Fig. 172/3).
2. Move the extended lever in the direction of the arrow.

→ The levelling bar (Fig. 172/4) is raised.

3. Hold the levelling bar in place using the pin (Fig. 172/5) and secure the pin using the safety splint.

4 Carry out the same settings on all adjuster elements.

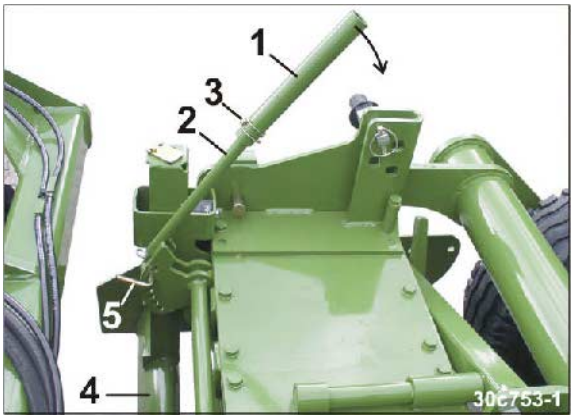

Fig. 172

8.12 Adjusting the speed of the soil tillage tines

DANGER

- **Carry out the adjustments only with the tractor universal joint shaft disengaged, the engine shut off, the tractor parking brake applied and the ignition key removed!**
- **Wait until the tool carriers have come to a complete stop.**
- **Do not touch hot gearbox parts; wear gloves.**

1. Move the gearbox shift lever (Fig. 173/1) into the required shift position [see Table (Fig. 85), on page 85].
2. Engage the gearbox shift lever according to the specifications.

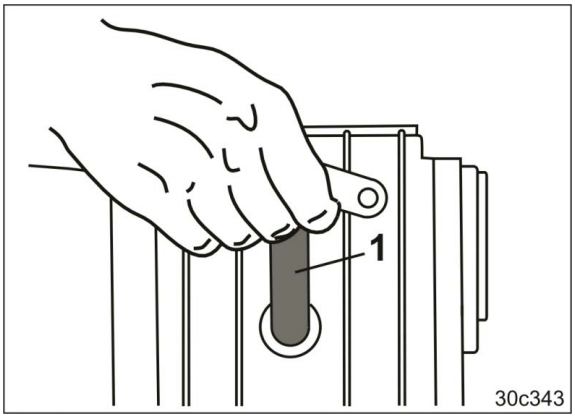

Fig. 173

8.13 Adjusting the track marker length and working intensity

DANGER

It is forbidden to stand in the swivelling area of the track marker!

1. Direct people out of the danger area.
2. Fold out both track markers simultaneously on the field (see AMATRON+ operating manual) and drive several metres.
3. Apply the tractor parking brake, switch off the tractor engine and remove the ignition key.
4. Undo the bolt (Fig. 174/1).
5. Set the track marker length to distance "A" (see table, Fig. 175, below).
6. Tighten the bolt (Fig. 174/1) securely.

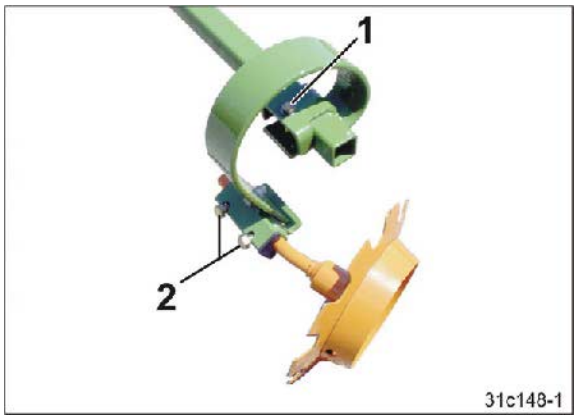

Fig. 174

7. Release both screws (Fig. 174/2).
8. Turn the track marker disc to adjust the working intensity of the track discs so that they run roughly parallel to the direction of travel on light soil and are more "on grip" on heavier soil.
9. Tighten the screws (Fig. 174/2).
10. Repeat the operation on the second track marker.

The table values specify the distance "A"

- from the centre of the machine
- up to the contact surface of the track marker disc.

	Distance "A"
Cirrus 6002	6.0m

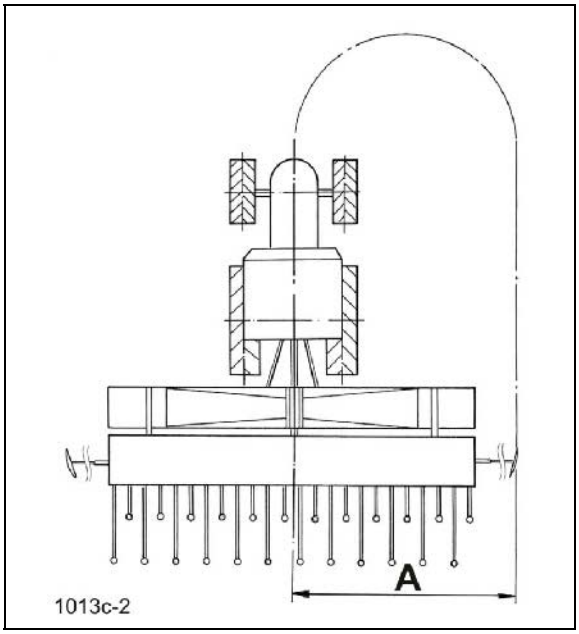

Fig. 175

8.13.1 Adjusting the tramline rhythm/counter in the AMATRON+

1. Select the tramline rhythm.
2. Set the tramline rhythm in the Machine Data menu (see AMATRON+ operating manual).
3. Refer to Fig. (Fig. 121 on page 107) for the tramline counter of the first field run.
4. Enter the tramline counter of the first field run in the Work menu (see AMATRON+ operating manual).
5. Adjust the seed volume reduction (%) when creating tramlines in the Machine Data menu (see AMATRON+ operating manual).
6. Switch the interval tramline control on/off in the Work menu (see AMATRON+ operating manual).

The tramline counter advances by one digit when the machine is lifted (see AMATRON+ operating manual).

The following prevent the counter from advancing:

- Pressing the STOP button before the machine is lifted.
- Switching off the AMATRON+.

8.14 Half-sided switching off

Machines with full dosing

For half-sided switching-off of the seed supply for machines with full dosing, refer to the AMATRON+ operating manual.

8.15 Moving the track disc carrier of the tramline marker to the operational/transport position

DANGER

Apply the tractor parking brake, switch off the engine and remove the ignition key.

The track disc carriers of the tramline marker are moved hydraulically if the tramline counter is switched over:

- To the digit "Zero" or
- From "zero" to another number.

8.15.1 Moving the track disc carrier to the working/transport position

The machine has two track disc carriers.

Swivel the track disc carriers into working or transport position manually.

Transport position

The illustration (Fig. 176) shows the transport position of the track disc carriers.

Locate the track disc carrier in transport position using a pin (Fig. 176/1) and secure it using a lynch pin.

Fig. 176

Working position

The illustration (Fig. 177) shows the working position of the track disc carriers.

Locate the track disc carrier in working position using a pin (Fig. 177/1) and secure it using a lynch pin.

Fig. 177

8.15.2 Adjusting the track discs

1. Set the track discs (Fig. 178/1) so that they mark the tramline.
2. Turn the track marker disc to adjust the working intensity of the track discs so that they run roughly parallel to the direction of travel on light soil and are more "on grip" on heavier soil.
3. Tighten the screws (Fig. 178/2) firmly.

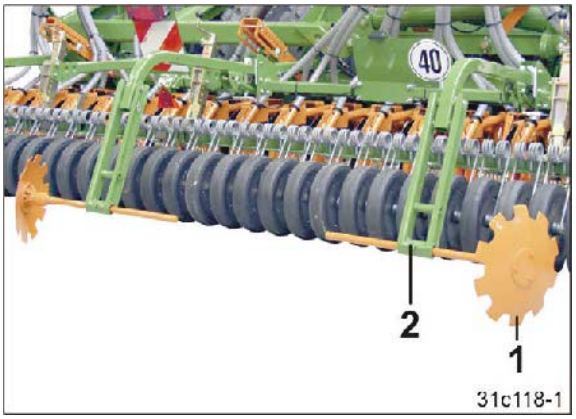

Fig. 178

When working with tramline rhythm 2 plus and tramline rhythm 6 plus, bring only one of the two track discs into transport position.

The track width of the cultivating tractor is then scored on the field on a back and forth run.

9 Transportation

When driving on public roads and ways the tractor and machine must comply with the national road traffic regulations (in Germany the StVZO and the StVO) and the accident prevention regulations (in Germany those of the industrial injury mutual insurance organisation).

The vehicle keeper and driver are responsible for compliance with the statutory stipulations.

Furthermore, the instructions in this section have to be complied with prior to starting and during travel.

- For transport journeys take heed of the section "Safety information for users".
- Before moving off, check:
  - The correct connection of the supply lines
  - The lighting system for damage, function and cleanliness
  - The brake and hydraulic system for visible damage
  - That the tractor parking brake is released completely
  - The function of the brake system.

WARNING

Risk of contusions, cutting, catching, drawing in and knocks when making interventions in the machine through unintentional machine movements.

- On folding machines, check that the transport locks are locked correctly.
- Secure the machine against unintentional movements before starting transportation.

WARNING

Risk of contusions, cuts, dragging, catching or knocks from tipping and insufficient stability.

- Drive in such a way that you always have full control over the tractor with the attached machine.

  In so doing, take your personal abilities into account, as well as the road, traffic, visibility and weather conditions, the driving characteristics of the tractor and the connected or coupled machine.
- Before transportation, fasten the side locking of the tractor lower link, so that the connected or coupled machine cannot swing back and forth.

WARNING

Danger of breaking during operation, insufficient stability and insufficient tractor steering and braking power on improper use of the tractor!

These risks pose serious injuries or death.

Comply with the maximum load of the connected machine and the approved axle and support loads of the tractor. Drive only with empty hopper.

WARNING

Risk of falling from the machine if riding against regulations!

It is forbidden to ride on the machine and/or climb the running machine.

Instruct people to leave the loading site before approaching the machine.

WARNING

During transportation, risk of stabbing injuries to other road users from uncovered, sharp harrow tines of the exact harrow pointing backwards!

Transportation without a correctly fitted transport guard rail is forbidden.

Moving the Cirrus to transport position on the field after work

1. Switch off the tractor universal joint shaft.
2. Fold in both track markers (see AMATRON+ operating manual).
3. Disengage the tractor universal joint shaft, engage the tractor parking brake, shut off the tractor engine and remove the ignition key.

DANGER

Disengage the tractor universal joint shaft, engage the tractor parking brake, shut off the tractor engine and remove the ignition key!

4. Drain the seed hopper.

DANGER

Empty the seed hopper on the field.

Transport journeys on roads and ways are prohibited when the seed hopper is filled. The brake system is designed only for an empty machine.

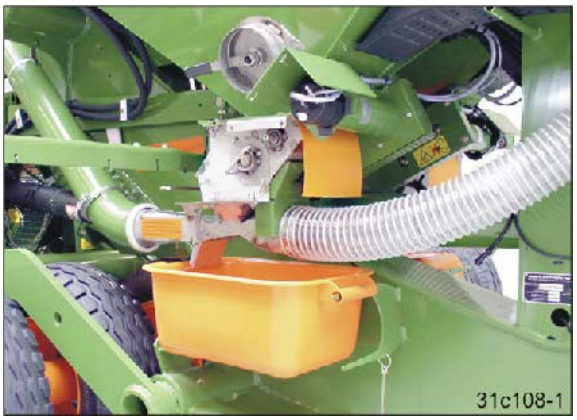

Fig. 179

5. Close the hopper cover (Fig. 180/1) and secure it using the rubber loops against unintentional opening during travel.

   Use the cover hook (Fig. 180/2).

Fig. 180

When not in use, the cover hook (Fig. 181/1) is in the transport bracket.

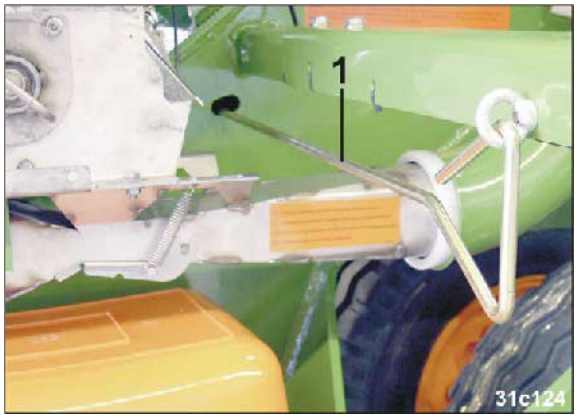

Fig. 181

6. Lift up and lock the ladders (Fig. 182).

CAUTION

Danger of getting crushed. Hold the ladder only at the marked positions.

Fig. 182

Push the ladder (Fig. 182) up and lock it after each use or before transport and prior to working. This avoids damaging the ladder.

The draw bar can damage the lowered ladder when the machine is turned!

7. Put the track disc carrier in its transport position.

Fig. 183

8. Push the two-part road safety bar (Fig. 184/1) on the rigid part of the exact harrow over the tine tips.
9. Fasten the road safety bar with spring holders (Fig. 184/2) to the exact harrow.

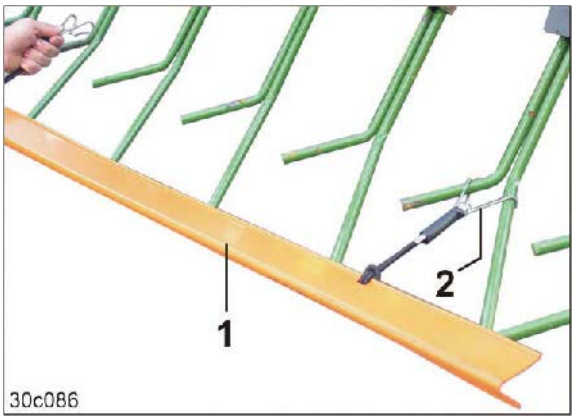

Fig. 184

10. Fold in the machine's extension arms.
11. Disable the tractor control units.

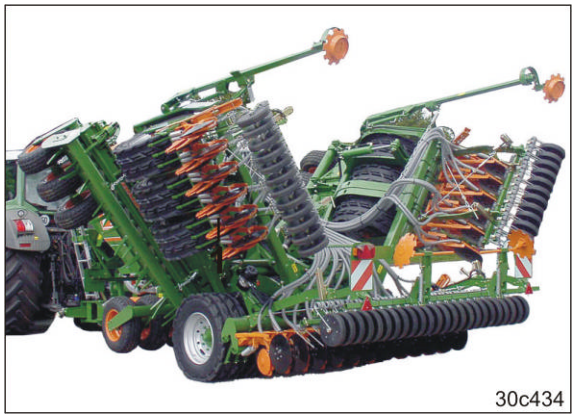

Fig. 185

Disable the tractor control units during transport!

12. Switch off the AMATRON+.
(see AMATRON+ operating manual).

DANGER

Switch off the AMATRON+ during transport.

Fig. 186

13. Check the lighting system for operation.

The warning signs and yellow reflectors must be clean and undamaged.

Fig. 187

- The permissible maximum speed of the machine is 40 km/h [1]. In particular on bad roads and ways driving may only take place at a considerably lower speed than specified!
- Switch on the all round lighting (if available), which is subject to authorisation, prior to starting a journey and check operation.
- In bends take into consideration the wide sweep and the centrifugal mass of the machine.

[1] The permissible maximum speed for attached work equipment differs in the various countries according to national traffic regulations. Ask your local importer / machine dealer about the maximum permissible speed on public roads.

10 Use of the machine

When using the machine, observe the information in the sections

- "Warning pictograms and other signs on the machine", as of on page 19 and
- " Safety information for users ".

Observing this information is important for your safety.

WARNING

Danger of breaking during operation, insufficient stability and insufficient tractor steering and braking power on improper use of the tractor!

Comply with the maximum load of the connected machine and the approved axle and support loads of the tractor.

WARNING

Risk of contusions, cutting, catching, drawing in and knocks through insufficient stability and tipping of the tractor and/or the connected machine.

Drive in such a way that you always have full control over the tractor with the attached machine.

In so doing, take your personal abilities into account, as well as the road, traffic, visibility and weather conditions, the driving characteristics of the driver and the attached machine.

WARNING

Risk of contusions, drawing in and catching during machine operation without the intended protective equipment!

Only ever start up the machine when the protective equipment is fully installed.

Only actuate the tractor control units from inside the tractor cab!

WARNING

Risk of being crushed, caught or struck by damaged components or foreign objects ejected by the machine!

Before switching on, check to ensure that the tractor universal joint shaft speed corresponds to the permitted drive rev. speed of the machine.

WARNING

Danger of being entangled and drawn in and danger from foreign objects being caught and thrown in the danger area of the driven PTO shaft!

- Whenever the machine is used, first check to ensure that the safety devices and guards of the PTO shaft are fully intact and functional.
  Have damaged safety devices and guards of the PTO shaft replaced immediately by a specialist workshop.
- Check that the PTO shaft guard is secured against rotation by the supporting chain.
- Maintain a sufficient safety clearance between you and the driven PTO shaft.
- Direct people out of the danger area of the driven PTO shaft.
- Shut down the tractor engine immediately in case of danger.

CAUTION

Danger from failure when the overload clutch engages!

Switch off the tractor universal joint shaft immediately if the overload clutch engages.

This avoids damaging the overload clutch.

DANGER

Risk of being crushed, caught or struck by objects ejected by the machine when it is driven!

Instruct people to leave the danger area of the machine before you switch on the tractor universal joint shaft.

10.1 Removing the transport safety bar

1. Release the spring holders (Fig. 188/2) and remove the road safety bar (Fig. 188/1).

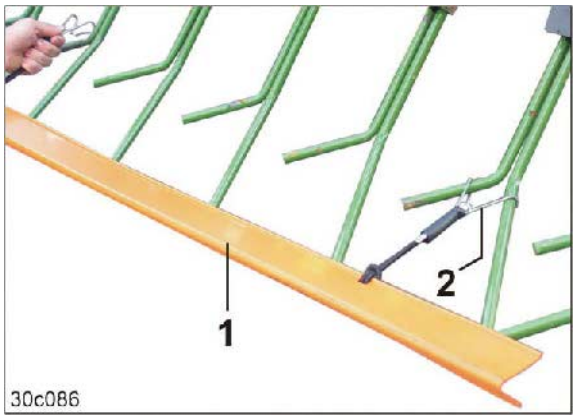

Fig. 188

2. Insert the two parts of the transport safety bar (Fig. 189/1) into each other and secure it on the transport bracket (Fig. 189/2) with the spring holders.

Fig. 189

10.2 Folding the machine extension arm out and in

DANGER

Instruct people to leave the swivelling range of machine's extension arm before you fold the machine's extension arm out or in.

Align the tractor and machine straight on a flat surface before you fold the machine's extension arm out or in.

Always raise the machine completely by moving the integrated running gear out fully before you fold the machine extension arm in or out.

Only when the machine is completely raised do the soil cultivating tools have sufficient ground clearance and are thus protected against damage.

Before folding it in, switch off the tractor universal joint shaft and do not switch it on again until the machine extension arms are extended completely.

10.2.1 Folding out the machine extension arms

1. Switch off the tractor universal joint shaft.
2. Switch on the tractor engine.
3. Switch on the AMATRON+ (see AMATRON+ operating manual).
4. Release the tractor parking brake and take your foot off the brake pedal. Never leave the tractor cab with the parking brake released.
5. Raise the machine fully by moving the integrated running gear (Fig. 190/1) out completely.

   5.1 Actuate control unit 1 until the machine is lifted completely.

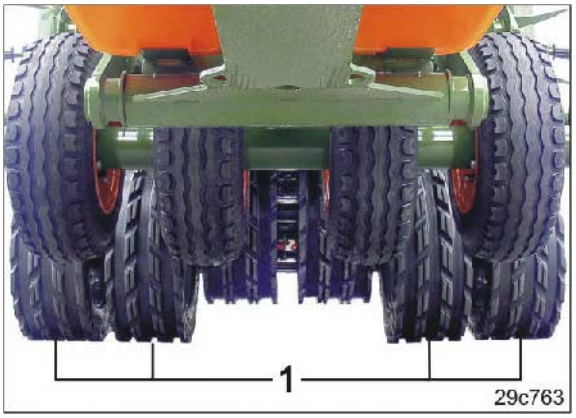

Fig. 190

6. Apply the tractor parking brake.
7. Call up the Work menu in the AMATRON+.
8. Press the shift key (key on the rear side of the AMATRON+).
9. Press the key.

→ The "Fold" menu appears on the display.

10. Select the "Unfold machine extension arm" submenu and follow the instructions on the display.

Follow the instructions on the display before you confirm the instructions in order to prevent any collisions of the machine components.

11. Fold out the machine extension arms completely.

    11.1 Actuate control unit 2 until the machine extension arms are extended completely.

    11.2 Actuate control unit 2 for a further 3 seconds so that the hydraulic accumulator (Fig. 274) is filled with hydraulic fluid.

12. Fold out the rotary cultivator completely.

    12.1 Actuate control unit 2 briefly to open the bars (Fig. 191/1) of the rotary cultivator.

    12.2 Actuate control unit 3 until the rotary cultivator is fully folded out.

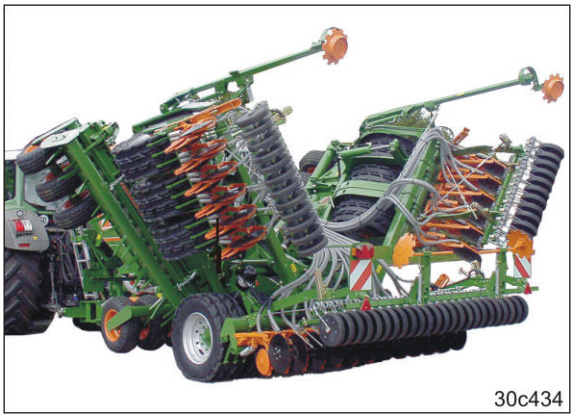

Fig. 191

Activate the following:

- Tractor control unit 2 for folding the machine extension arms.
- Tractor control unit 3 for folding the rotary cultivator.

The extension arm bars (Fig. 192/1) and the rotary cultivator bars (Fig. 193/1) open automatically before folding out.

Position control unit 2 briefly to "Fold in" and then again to "Fold out", should the bars not open. Control unit 2 controls all bars.

Fig. 192

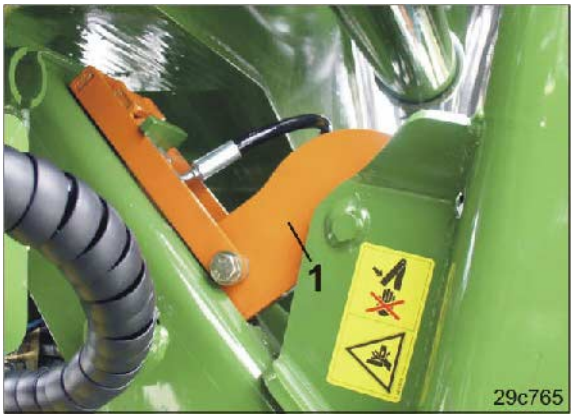

Fig. 193

13. Exit the "Folding" menu.
14. Put the Cirrus in its working position.

10.2.2 Folding in the machine extension arms

1. Switch off the tractor universal joint shaft.
2. Release the tractor parking brake and take your foot off the brake pedal.
   Never leave the tractor cab with the parking brake released.
3. Raise the machine fully by moving the integrated running gear (Fig. 194/1) out completely.
   3.1 Actuate control unit 1 until the machine is lifted completely.

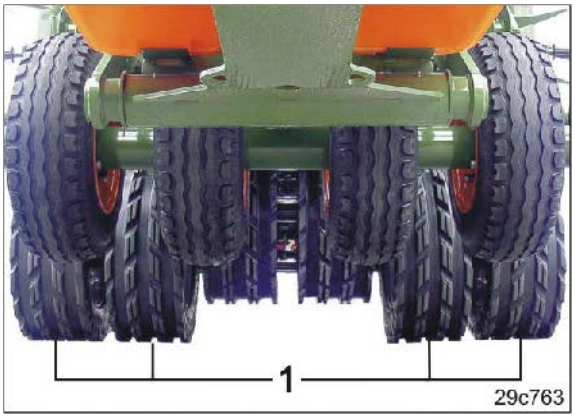

Fig. 194

4. Apply the tractor parking brake.
5. Call the Work menu in the AMATRON+.
6. Press the shift key
   (key on the rear side of the AMATRON+).
7. Press the key.

→ The "Fold" menu appears on the display.

8. Select the "Fold in machine extension arm" submenu and follow the instructions on the display.

> Follow the instructions on the display before you confirm the instructions in order to prevent any collisions of the machine components.

9. Fold in the machine's extension arms completely.
   9.1 Actuate control unit 2 until the machine extension arms are fully folded in.
10. Fold in the rotary cultivator completely.
    10.1 Actuate control unit 3 until the rotary cultivator is fully folded in.
11. Switch off the AMATRON+
    (see AMATRON+ operating manual).

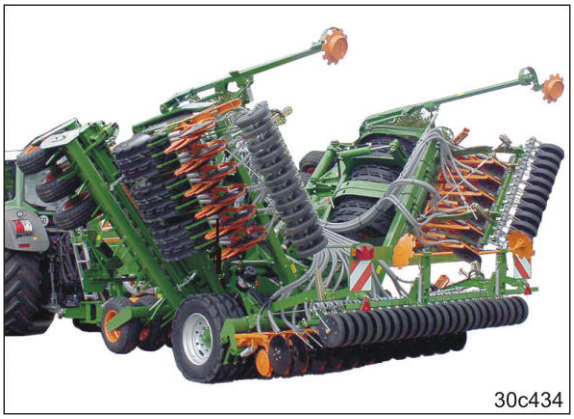

Fig. 195

DANGER

After the machine extension arms are folded out, check that all bars are engaged properly on the locking spigot.

The mechanical transport lock is made up of:

- The bars (Fig. 197/1) of the machine extension arms.
- The bars (Fig. 198/1) of the rotary cultivator.

Fig. 196

Fig. 197

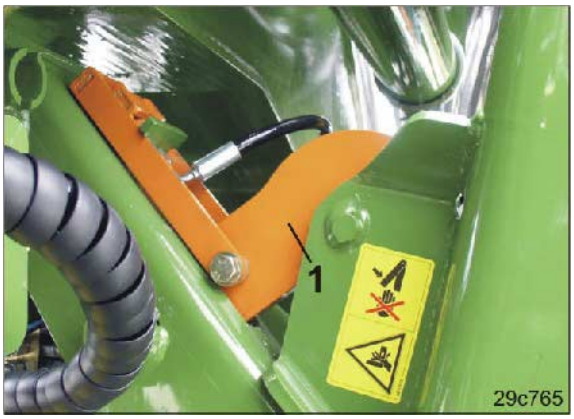

Fig. 198

12. Move in the integrated running gear until the machine is horizontal.

    12.1 Actuate control unit 1 until the machine is in a horizontal position.

Ensure that the machine has sufficient ground clearance in all driving situations.

Fig. 199

10.3 Filling the seed hopper

DANGER

Fill the seed hopper on the field only!

Transport journeys on roads and ways are prohibited when the seed hopper is filled. The brake system is designed only for an empty machine.

Before filling the seed hopper, apply the tractor parking brake, shut off the tractor engine and remove the ignition key!

Observe the approved filling levels and total weights!

1. Couple the Cirrus to the tractor.
2. Apply the tractor parking brake, switch off the tractor engine and remove the ignition key!
3. Check whether the correct dosing roller is mounted in each dosing unit.
4. Release the rubber loops (Fig. 200/1) together with the cover hook (Fig. 200/2).

Fig. 200

5. Lift the ladders (Fig. 201) out of their locking device and lower them to the stop.

CAUTION

Danger of getting crushed. Hold the ladder only at the marked positions.

Fig. 201

6. Climb on the loading plate via the ladder.
7. Release the rubber loops on the end face.
8. Open the swivel cover.
9. If necessary, remove foreign bodies in the seed hopper.
10. Adjust the level sensor(s) in the seed hopper.

Fig. 202

11. Load the seed hopper
    - with sacked merchandise from a supply vehicle
    - with a filling auger from a supply vehicle
    - from bulk bags.

12. Switch the interior lighting of the seed hopper on and off for night-time working.

    The interior lighting is coupled with the driving lights of the tractor.

Fig. 203

13. Close the swivel cover and secure it with rubber loops.
14. Pull the ladder (Fig. 201) up and lock it.

Push the ladder (Fig. 201) up and lock it after each use or before transport and prior to working. This avoids damaging the ladder.

The draw bar can damage the lowered ladder when the machine is turned!

10.3.1 Load the seed hopper with sacked merchandise from a supply vehicle

1. Approach the open loading edge of the trailer with the Cirrus.
2. Put the tractor on an extreme steering lock (approx. 90° to the machine).
3. Reverse onto the supply vehicle until the loading plate is lying up against the supply vehicle with no gap, but is not touching the vehicle (marshalling person required).
4. Raise / lower the tractor's lower link until the loading plate and the loading area of the trailer are level.
5. Apply the tractor parking brake, switch off the tractor engine and remove the ignition key.
6. Fill the seed hopper from the loading plate only and constantly ensure firm support when transporting the sacked merchandise.

Fig. 204

DANGER

Manoeuvring the Cirrus requires a marshalling person.

Never stand between the supply vehicle and the machine.

Always hold tight when crossing the loading plate and supply vehicle (danger of stumbling).

10.3.2 Loading the seed hopper with a filling auger

1. Apply the tractor parking brake, switch off the tractor engine and remove the ignition key.
2. Approach the machine carefully with the supply vehicle.
3. Load the seed hopper via the filling auger in consideration of the manufacturer's instructions.

Fig. 205

CAUTION

Never move between the supply vehicle and the machine.

10.3.3 Loading the seed hopper from bulk bags

1. Set the Cirrus down on a flat surface.
2. Apply the tractor parking brake, switch off the tractor engine and remove the ignition key.
3. Approach the machine carefully with the bulk bag.
4. Climb onto the loading plate.
5. Unload the bulk bag into the seed hopper.

Fig. 206

DANGER

Never move between the supply vehicle and the machine.

Never stand under suspended loads.

10.3.4 Entering the filling volume in the AMATRON+

If the exact filling volume is known, enter the filling volume on the AMATRON+ (see AMATRON+ operating manual).

It is then possible to input the amount (kg) remaining in the seed hopper in which the level alarm is to be triggered.

The AMATRON+ triggers an alarm if:

- the theoretical, calculated remaining amount is reached and the level sensor is logged off on the AMATRON+ or
- the level sensor is no longer covered with seed.

10.4 Starting work on the field

DANGER

- **Direct people out of the danger area of the machine, in particular from the swivelling range of the machine extension arms, the track markers and the rotating tool carriers.**
- **Actuate the tractor's control units only in the tractor cab.**

1. Fold out the machine extension arms.
2. Actuate control unit 4.

→ Switch on the blower fan.

3. Check the fan speed and correct it as necessary.
4. Bring the tractor universal joint shaft speed to 1000 rpm.
5. Actuate control unit 1 until the machine is lowered, i.e. the integrated running gear is completely moved in.

For tractors with hydraulically or pneumatically shiftable universal joint shaft, the universal joint shaft must be switched on only while idling in order to prevent damage to the PTO shaft.

When lowering, pull the machine forward slightly.

Actuating control unit 1 not only lowers the machine, but also carries out the following hydraulic functions:

- Folding out the active track marker, i.e. the one indicated on the display (see AMATRON+ operating manual).
- Lowering the rotary cultivator.
- Closing the seed tubes in the distributor head if the tramline counter indicates "0" on the AMATRON+ display.
- Lowering the discs of the tramline marker if the tramline counter shows the number "0" on the display of the AMATRON+.

6. Raise/lower the tractor lower links until the machine frame (Fig. 207/3) is parallel to the ground.

> Limit the lift height of the tractor lower links (Fig. 207/1)!
>
> The machine must not touch the PTO shaft (Fig. 207/2) when the lower links are raised (danger of failure).

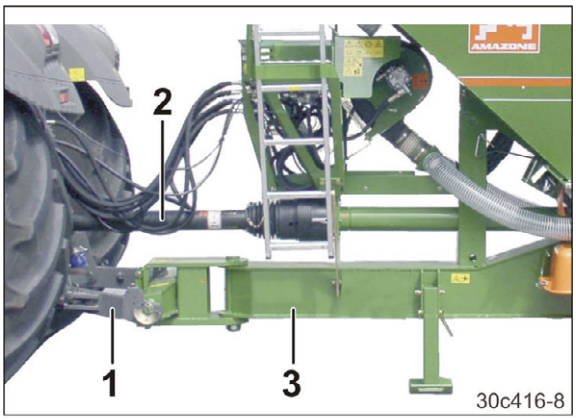

Fig. 207

7. Check the tramline rhythm on the AMATRON+ display and correct if necessary (see AMATRON+ operating manual).
8. Check the tramline counter on the AMATRON+ display and correct if necessary (see AMATRON+ operating manual).
9. Start.

10.5 Checks

After 100 m check and correct as necessary the:

- Working intensity of the rotary cultivator
- Placement depth of the seed.
- Working intensity (depending on the equipment)
  - of the exact harrow
  - of the drag tines
  - of the seed pressure rollers.

Check on a change from light soil to heavy soil and vice versa

- Placement depth of the seed.

10.5.1 Checking the seed planting depth

1. Sow approximately 100 m at working speed.
2. Uncover the seed at several points and check the placement depth.

10.6 During work

Changing the sowing rate (only machines with full dosing)

During work, the sowing rate (100%) in the Work menu can be changed as follows at the touch of a button:

- Increased by percentage (in +10% increments)
- Decreased by percentage (in -10% increments)
- Reset to 100% sowing rate.

The percentage application rate increase (e.g. 20 %) has to be set prior to work commencement in the Machine Data menu. (see AMATRON+ operating manual).

Changing the exact harrow pressure hydraulically (optional)

During work on changing soils, the exact harrow pressure can be increased on heavy soils (see AMATRON+ operating manual).

Switching off the tramline counter (STOP button)

If the tramline counter is prevented from indexing when there is a work interruption, press the STOP button in the Work menu (see AMATRON+ operating manual).

Locking the track marker actuation

The track marker actuation can be locked in the Work menu (see AMATRON+ operating manual).

Folding the track marker in before any obstacles

After the obstacle button has been actuated, the track markers can be folded in, e.g. before an obstacle, in order to prevent damage to the track marker caused by hitting the obstacle (see AMATRON+ operating manual).

With active obstacle button

- The field continues to be seeded
- The machine/rotary cultivator and coulter frame are not lifted.
- The tramline counter stops counting.

Visual inspection of the distributor heads

From time to time, check the distributor heads for impurities.

Contamination and seed remains can block up the distributor heads and have to be removed immediately.

Seeding with difficult soil conditions

Mud holes can be passed through and seeded by partially or fully raising the rotary cultivator and the coulter frame.

During radar operation, incorrect travel speed measurements may occur in mud holes. Compare the travel speed displayed in the AMATRON+ with that of the tractor.

10.7 Turning at end of the field

Before turning at the end of the field

1. Slow down your travel speed.
2. Do not reduce the tractor's engine speed too far in order to ensure that the hydraulic functions continue without interruption at the headland.
3. Actuate control unit 1.
4. Turn the combination as soon as the machine or coulter frame is raised.

Fig. 208

After turning at the end of the field

1. Actuate control unit 1 until all components are in working position.
2. Start the field run as soon as the soil tillage tines touch the ground.

DANGER

After turning, if control unit 1 is actuated the opposite track marker is moved to the working position.

10.7.1 Turning on the axle

Actuating control unit 1 before turning results in

- Raising the machine, including the rotary cultivator, via the integrated running gear
- Folding in of the active track marker
- Shifting on of the tramline counter
- Raising the track discs of the tramline marker.

10.7.2 Turning on the roller

1. Press the Shift key of the AMATRON+ operator control terminal and activate the symbol (Fig. 209).

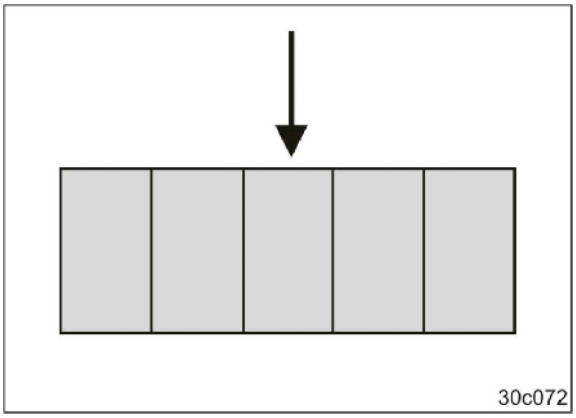

Fig. 209

Actuating control unit 1 before turning results in

- Raising of the coulter frame
- Lifting the rotary cultivator
- Folding in the active track marker
- Shifting on of the tramline counter
- Raising the track discs of the tramline marker.

10.8 End of work on the field

1. Clear the symbol (Fig. 209) in the AMATRON+ display so that the machine can be raised via the integrated running gear.

   1.1 Press the Shift key of the AMATRON+ operator control terminal and deactivate the symbol (Fig. 209).

2. Switch off the fan.
3. Actuate control unit 1 until the following hydraulic functions are carried out:
   - Raising of the machine via the integrated running gear
   - Folding in of the active track marker
   - Raising the track discs of the tramline marker.
4. Fold in the machine extension arms and rotary cultivator.
5. Empty the seed hopper.
6. Switch off the AMATRON+.

Seed residues left in the seed dosing units can swell or germinate, if the seed dosing unit is not completely emptied!

As a result, rotation of the dosing rollers is blocked and damage can be caused to the drive!

10.9 Emptying the seed hopper and/or seed dosing unit

DANGER

Apply the tractor parking brake, switch off the tractor engine and remove the ignition key.

DANGER

Wear a face mask. Do not inhale toxic dressing dust when removing dressing dust by means of compressed air.

10.9.1 Emptying the seed hopper

1. Open the slider (Fig. 210) and empty the seed into the calibration trough or a suitable hopper.

A commercially available hose (DN 140) can be fitted.

2. Empty the residual seed volume.

Fig. 210

10.9.2 Emptying the dosing unit

1. Push a calibration trough into the mounting under the dosing unit.

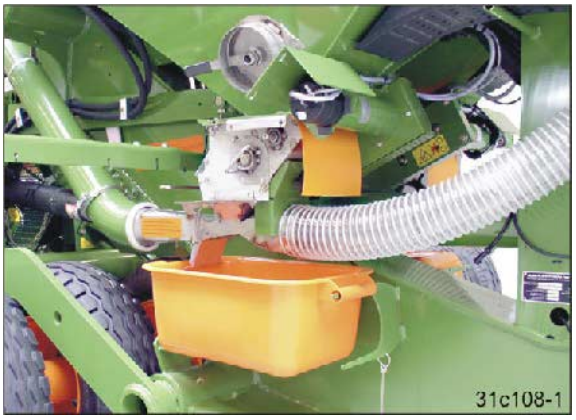

Fig. 211

The hopper should not be emptied:

2. Close the slider (Fig. 212/1).

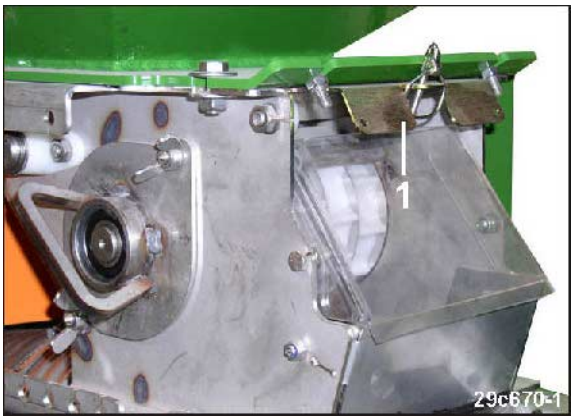

Fig. 212

2. Empty the hopper and dosing unit.

   2.1 Turn the handle (Fig. 213/1).

   → The residue emptying flap opens to allow emptying of the hopper and dosing unit.

3. Repeat the procedure on the second dosing unit (if fitted).

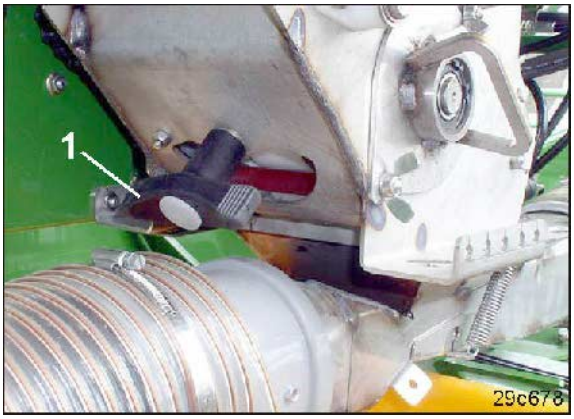

Fig. 213

3. Empty the injector sluice (Fig. 214/1).

   4.1 Open the injector sluice flap (Fig. 214/1).

   → Emptying the injector.

5. Repeat this procedure on the second injector sluice (if fitted).

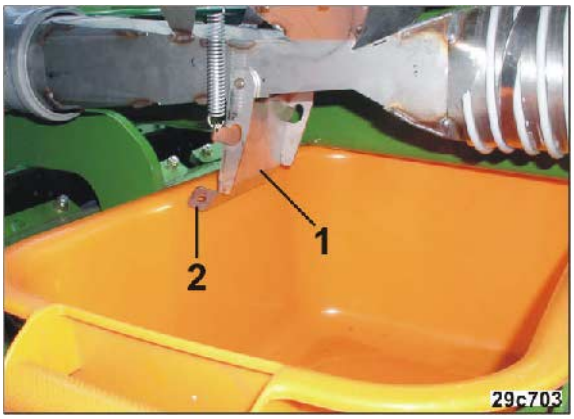

Fig. 214

CAUTION

Crushing hazard
when opening and closing the injector sluice flap (Fig. 214/1)!

Hold the injector sluice flap only by the lug (Fig. 214/2), otherwise there is a danger of injury when the spring-loaded injector sluice flap snaps closed.

Never insert your hand between the injector sluice flap and the injector sluice!

6. Empty the dosing units and the dosing rollers completely.

   6.1 Run the electric motor (Fig. 215/1) briefly. (Only machines with full dosing).

7. To completely clean the dosing unit, remove and reinstall the dosing roller.

Fig. 215

8. Open the slider(s) (Fig. 212/1) and secure (clip pin).
9. Close the residue emptying flap(s) (Fig. 213/1).
10. Close the injector sluice flap(s) (Fig. 214/1).

11. Secure the calibration trough(s) on the transport bracket.

Fig. 216

11 Faults

WARNING

Risk of contusions, cutting, catching, drawing in and knocks through

- **Unintentional falling of the machine raised using the tractor's three-point hydraulic system.**
- **Unintentional falling of raised, unsecured machine parts.**
- **Unintentional start-up and rolling of the tractor-machine combination.**

Secure the tractor and the machine against unintentional start-up and rolling before eliminating faults on the machine. See section 6.2, on page 118.

Wait for the machine to stop, before entering the machine danger area.

11.1 No motion of soil tillage tines when work is in progress

If the machine encounters stony ground or a fixed obstacle, the soil tillage tines may come to a complete stop. Ratchet clutches upstream of each angular gearbox prevent possible damage to the gearbox.

- If the tool carriers come to a complete stop because a ratchet clutch has disengaged, stop and reduce the universal joint shaft speed of the tractor to approx. 300 rpm until you hear the ratchet clutch engage.
- If the tool carriers do not start rotating, switch off the universal joint shaft and remove the obstacle (only with the engine shut off and the ignition key removed). Once you have done this, the ratchet clutch is immediately ready for operation.

11.2 Wear of the soil tillage tines

Ensure that the soil tillage tines have the correct length.

- In the event of increased tine wear, increase the working depth of the soil tillage implement and adapt the side panels and the levelling bars to the new working depth.
- For great working depths, the soil tillage tines have to be replaced with new ones even before the minimum length is reached.

  Worn soil tillage tines can also be restored to their original length using welded-on tips.

11.3 Residual seed volume indicator

When volume drops below the residual seed volume, if the level sensor is correctly set, on the AMATRON+ display a warning message (Fig. 217) appears with an acoustic signal.

The residual seed volume should be large enough to avoid fluctuations or gaps in the output rate.

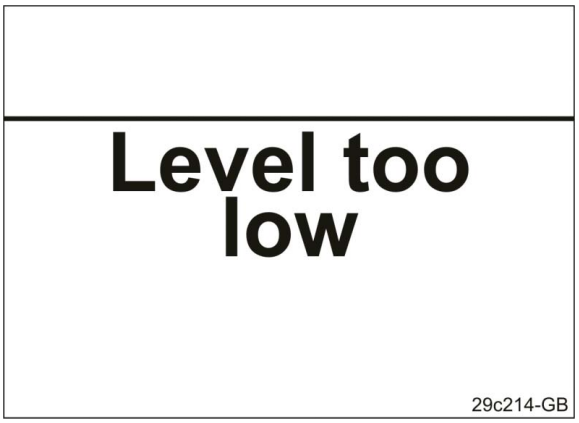

Fig. 217

11.4 Deviations between the preset and actual sowing rates

Possible causes that can lead to a deviation between the preset and actual sowing rates:

- For acquiring the cultivated area and the required seed spread rate, the AMATRON+ requires the impulses of the radar over a calibration distance of 100 m.

  Field surfaces change during work, e.g. when changing from dry, light soil to wet, heavy soil.

  This can also alter the calibration value "Imp./100 m".

  If there are differences between the preset and actual sowing rates, the calibration value "Imp./100 m" has to be redetermined by travelling a measured distance (see AMATRON+ operating manual).

- When seeding with moist dressed seeds, differences between the preset and actual sowing rates can come about, if there is a period of less than 1 week (2 weeks recommended) between the dressing and seeding.

- A defective or wrongly set dosing lip (Fig. 218/1) will cause dosing errors.

  Set the dosing lip so that it is lying lightly up against the dosing roller (Fig. 218/2).

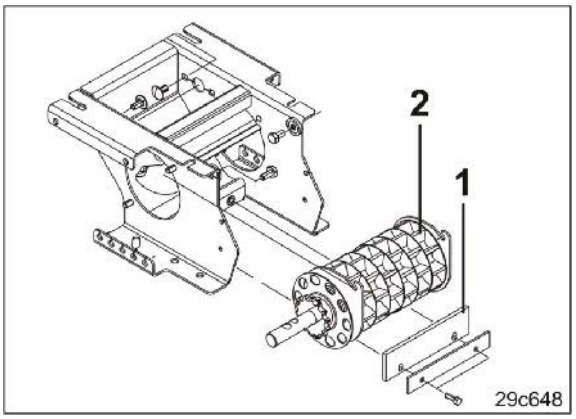

Fig. 218

11.5 Failure of the AMATRON+ during work

If a failure of the AMATRON+ comes about while working on the field, the seeding cannot be continued. If troubleshooting on-site is not possible, the machine can be folded in for road transport.

11.5.1 Transporting the machine to the workshop after failure of the AMATRON+

DANGER

- **Actuate the tractor's control units only in the tractor cab.**
- **Before actuating the tractor's control units, direct any people out of the danger area.**

1. Disengage the tractor universal joint shaft, engage the tractor parking brake, shut off the tractor engine and remove the ignition key.
2. Take the two valve pins (Fig. 219/1) out of the valves and turn them through 45 degrees to lock.

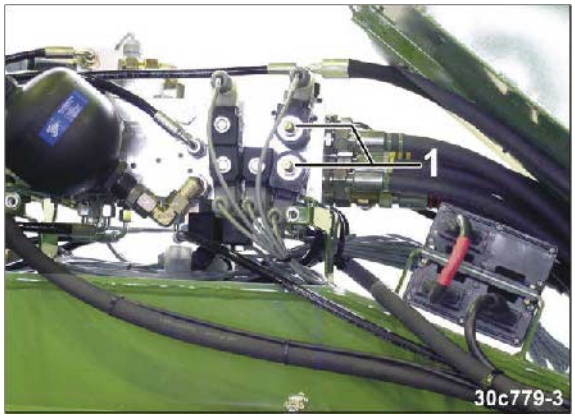

Fig. 219

DANGER

Fold the machine in emergency mode only if the AMATRON+ fails.

3. Direct people out of the danger area.
4. Switch off the tractor universal joint shaft.
5. Switch on the tractor engine.
6. Release the tractor parking brake and take your foot off the brake pedal. Never leave the tractor cab with the parking brake released.
7. Raise the machine fully by moving the integrated running gear (Fig. 220/1) out completely.

   7.1 Actuate control unit 1 until the machine is fully raised.

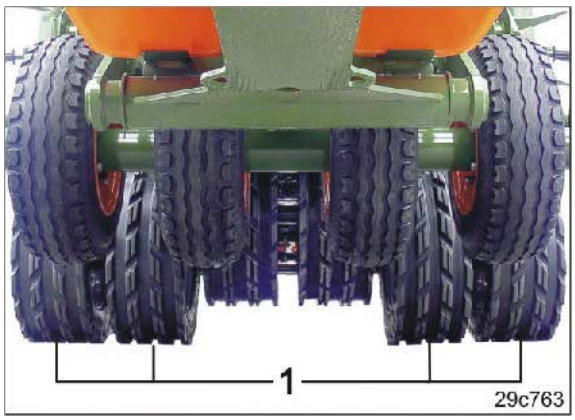

Fig. 220

8. Apply the tractor parking brake.
9. Fold in the machine's extension arms completely.
   9.1 Actuate control unit 2 until the machine extension arms are fully folded in.
10. Fold in the rotary cultivator completely.
   10.1 Actuate control unit 3 until the rotary cultivator is fully folded in.

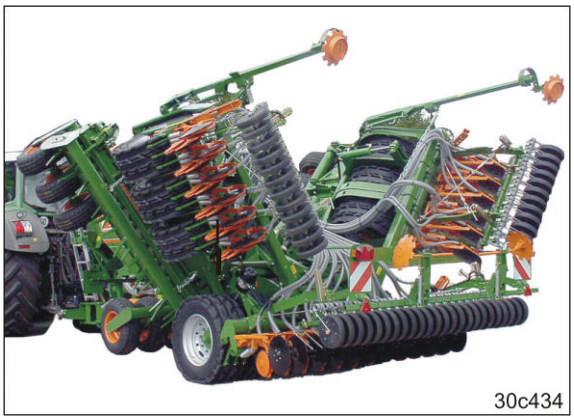

Fig. 221

DANGER

After the machine extension arms are folded out, check that all bars are engaged properly on the locking spigot.

The mechanical transport lock is made up of:

- The bars (Fig. 197/1) of the machine extension arms.
- The bars (Fig. 198/1) of the rotary cultivator.

11. Put the machine in road transport position.

DANGER

Go to the nearest repair workshop without delay.

After the repair, move both valve pins (Fig. 219/1) into their normal position.

11.6 Fault table

Fault	Possible cause	Remedy
Track marker not changing	Working position sensor defective	Replace the working position sensor
	Hydraulic valve jamming	Replace the hydraulic valve
Track marker switching too early or too late	Working position sensor defective	Replace the working position sensor
Tramline counter not working	Stop key actuated	Switch off the stop key
	Tramline rhythm wrong	Adjust tramline rhythm
	Working position sensor defective	Replace the working position sensor
Fan sensor alarmed	Alarm limit wrongly set	Alter the alarm limit
	Oil volume too low or too high	Set the oil volume
	Fan sensor defective	Replace the fan sensor
Radar not working	Radar defective	Replace the radar
Slide in the distributor head (tramlining control system) not functioning		Clean the distributor head
		Clean the control disc

12 Cleaning, maintenance and repairs

WARNING

Risk of contusions, cutting, catching, drawing in and knocks through

- **Unintentional falling of the machine raised using the tractor's three-point hydraulic system.**
- **Unintentional falling of raised, unsecured machine parts.**
- **Unintentional start-up and rolling of the tractor-machine combination.**

Secure the tractor and machine against unintentional starting and unintentional rolling away before you perform any cleaning, servicing or maintenance work on the machine.

WARNING

Risk of contusions, cutting, catching, drawing in and knocks through unprotected danger points!

- Mount protective equipment, which you removed when cleaning, maintaining and repairing the machine.
- Replace defective protective equipment with new equipment.

12.1 Securing the machine coupled to the tractor

DANGER

Before working on the machine, place the machine connected to the tractor on the stand (Fig. 222/1) to prevent unintentional lowering of the tractor's lower links.

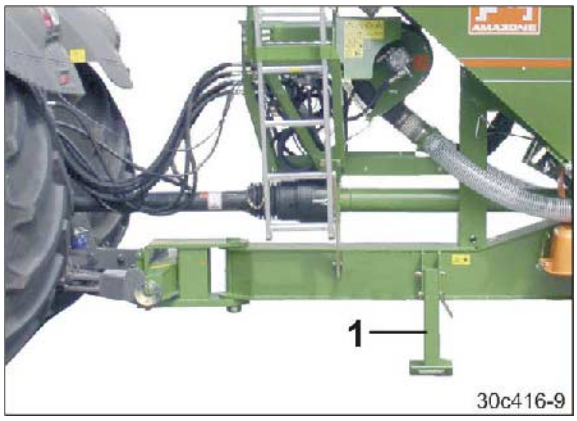

Fig. 222

12.2 Securing the lifted machine

If you lift the machine via the integrated running gear while it is folded in or out, for example for cleaning, secure the lifted machine to prevent it from lowering accidentally before you work on the machine.

DANGER

Secure the machine lifted using the integrated running gear with two pins against unintended lowering.

1. Direct people out of the danger area.
2. Raise the machine fully by moving the integrated running gear out completely.
3. Remove the pin (Fig. 223/1) from the transport bracket.

   The bolt is secured using a tube clip (Fig. 223/2).

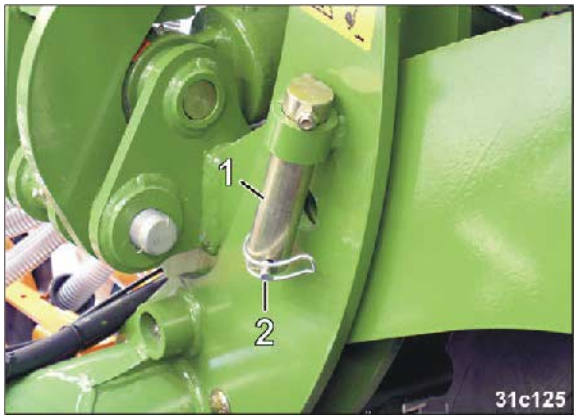

Fig. 223

4. Position the pin (Fig. 224/1) as shown and secure the bolt using the tube clip.
5. Repeat the procedure on the opposite side of the machine.

Fig. 224

After completion of the cleaning, maintenance and repair work, fasten both pins (Fig. 223/1) in the transport brackets and secure each bolt using a tube clip.

DANGER

Lower the machine completely after removing the pin retainer.

12.3 Cleaning the machine

DANGER

Wear a face mask. Do not inhale toxic dressing dust when removing dressing dust by means of compressed air.

- Pay particular attention to the brake, air and hydraulic hose lines.
- Never treat brake, air and hydraulic hose lines with petrol, benzene, petroleum or mineral oils.
- After cleaning, grease the machine, in particular after cleaning with a high pressure cleaner / steam jet or liposoluble agents.
- Observe the statutory requirement for the handling and removal of cleaning agents.

Important instructions for cleaning with a high-pressure cleaner / steam jet:

- Do not clean any electrical components.
- Do not clean any chromed components.
- Never aim the cleaning jet from the nozzle of the high pressure cleaner / steam jet directly on lubrication and bearing points.
- Always maintain a minimum jet distance of 300 mm between the high pressure cleaning or steam jet cleaning nozzle and the machine.
- Comply with safety regulations when working with high pressure cleaners.

1. Fold out the machine.
2. Lower the machine by moving in the integrated running gear completely.
3. To clean, always place the machine connected to the tractor on the stand (Fig. 222/1).
4. Empty the seed hopper and seed dosing unit.
5. Clean the distributor head.
6. Clean the machine with water or with a high pressure cleaner.
7. If you raise the machine, secure the raised machine before you start with the cleaning.

12.3.1 Cleaning the distributor head (specialist workshop)

1. Fold the machine extension arms out (see section "10.2", on page 164).
2. Disengage the tractor universal joint shaft, engage the tractor parking brake, shut off the tractor engine and remove the ignition key.

WARNING

Disengage the tractor universal joint shaft, engage the tractor parking brake, shut off the tractor engine and remove the ignition key.

Before climbing on it, clean the path to the distributor head and the area of the distributor head (danger of slipping).

There is the risk of an accident on the path to the distributor head and in the area of the distributor head.

3. Slacken the winged nuts (Fig. 225/1) and remove the clean plastic flap (Fig. 225/2) from the distributor head.
4. Remove any impurities with a brush, and wipe out the distributor head and plastic cap with a dry cloth.
5. Clean impurities between the base plate (Fig. 225/A) with compressed air.
6. Install the plastic cap (Fig. 225/2).
7. Fix the plastic cap with winged nuts (Fig. 225/1).

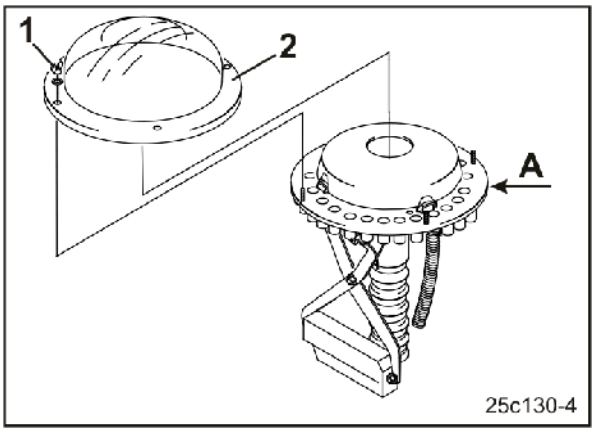

Fig. 225

Intensive cleaning requires the slides to be removed.

12.3.2 Shutdown of the machine over a long period of time

1. Do not raise the coulters, but set them down on a firm base.
2. Thoroughly clean and dry the coulter.
3. To prevent rust, conserve the sowing discs (Fig. 226) with an environmentally friendly anti-corrosion agent.

Fig. 226

12.4 Lubrication regulations

DANGER

Disengage the tractor universal joint shaft, engage the tractor parking brake, shut off the tractor engine and remove the ignition key.

Lubricate the machine in accordance with the specifications of the manufacturer.

Carefully clean the lubrication nipple and grease gun before lubrication so that no dirt is pressed into the bearings. Press the dirty grease completely into the bearings and replace it with new grease.

This pictogram indicates a lubrication point.

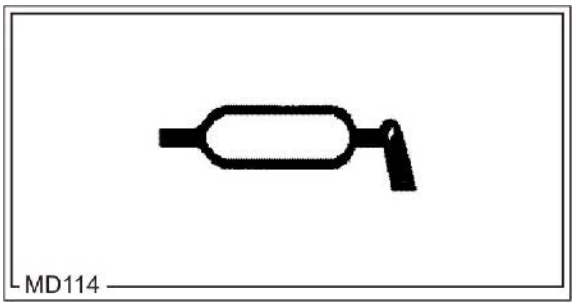

Fig. 227

12.4.1 Lubricants

For lubrication work use a lithium saponified multipurpose grease with EP additives:

Company	Lubricant designation
ARAL	Aralub HL2
FINA	Marson L2
ESSO	Beacon 2
SHELL	Ratinax A

12.4.2 Lubrication point overview

Cirrus 6002	Number of lubrication nipples	Lubrication interval	Notes
Fig. 229/1	1	25 h	
Fig. 229/2	1	25 h	
Fig. 230/1	2	25 h	
Fig. 230/2	2	25 h	
Fig. 231/1	2	25 h	
Fig. 231/2	2	25 h	
Fig. 231/3	2	25 h	
Fig. 231/4	2	25 h	
Fig. 232/1	2	25 h	
Fig. 232/2	2	25 h	
Fig. 233/1	1	25 h	
Fig. 233/2	1	25 h	
Fig. 233/3	1	25 h	
Fig. 233/4	1	25 h	
Fig. 234/1	1	25 h	
Fig. 234/2	1	25 h	
Fig. 235/1	2	25 h	
Fig. 236/1	6	200 h	
Fig. 237/1	2	25 h	
Fig. 237/2	2	25 h	
Fig. 238/1	1	25 h	
Fig. 239/1	4	25 h	
Fig. 240/1	1	50 h [1)]	
Fig. 240/2	1	50 h [1)]	
Fig. 241/1	1	50 h [1)]	
Fig. 241/2	1	50 h [1)]	Lubricate with at least 20 strokes of the grease gun
Fig. 241/3	1	50 h [1)]	
Fig. 241/4	1	50 h	
Fig. 242/1	1	50 h	Do not remove the PTO shaft guard for lubrication as shown in the illustration. The PTO shaft guard has an installation opening.

Fig. 243/1	2	50 h [1)]	
Fig. 243/2	2	50 h [1)]	
Fig. 243/3	2	50 h [1)]	
Fig. 243/4	2	50 h [1)]	
Fig. 243/5	2	50 h [1)]	Opening the sliding profile for lubrication
Fig. 244/1	1	50 h [1)]	
Fig. 244/2	1	50 h [1)]	
Fig. 244/3	1	50 h [1)]	
Fig. 244/4	1	50 h [1)]	
Fig. 244/5	1	50 h [1)]	Opening the sliding profile for lubrication
Fig. 245/1	2	25 h	Lubricate only with the machine folded in, raised and secured (see section 12.2)!
Fig. 245/2	2	25 h	
Fig. 245/3	2	25 h	

Only machines with hydraulic brake system:

Fig. 246/1	1	25 h	Only machines with hydraulic brake mechanism
Fig. 247/1	2	25 h	Only machines with hydraulic brake mechanism
[1)] Observe the service instructions of the PTO shaft manufacturer.			

Fig. 228

Fig. 229

Fig. 230

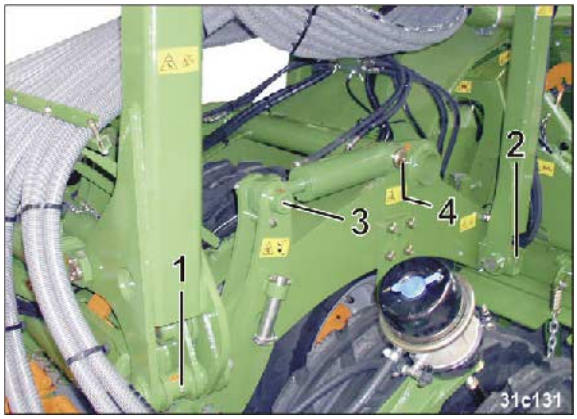

Fig. 231

Fig. 232

Fig. 233

Fig. 234

Fig. 235

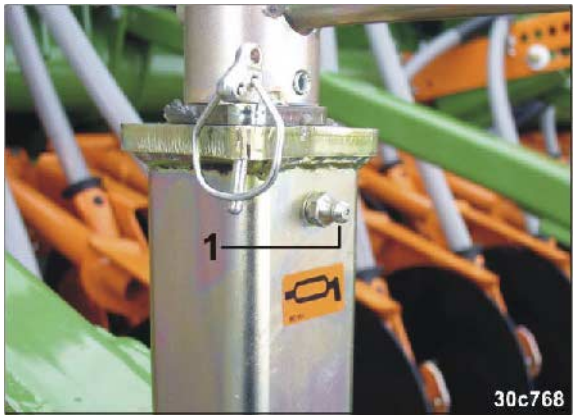

Fig. 236

Fig. 237

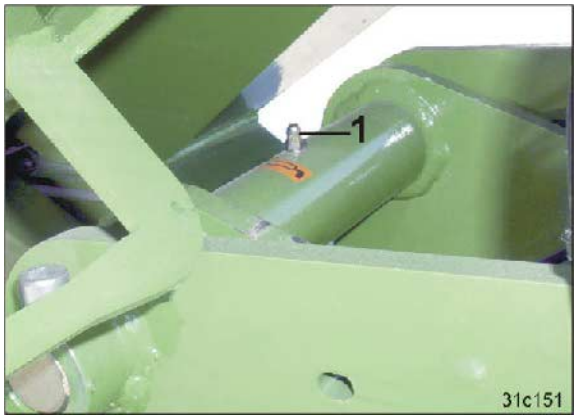

Fig. 238

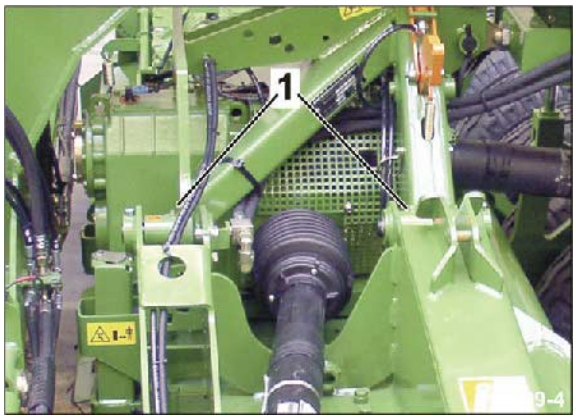

Fig. 239

Fig. 240

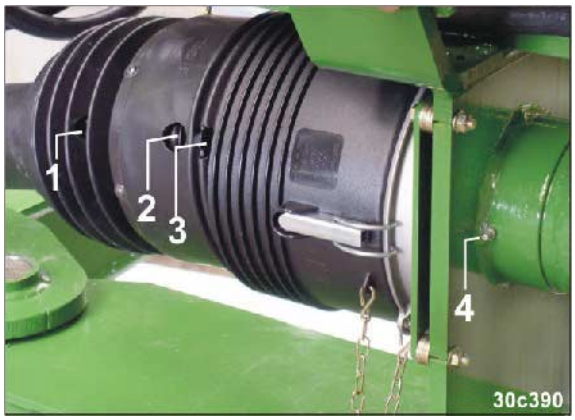

Fig. 241

Fig. 242

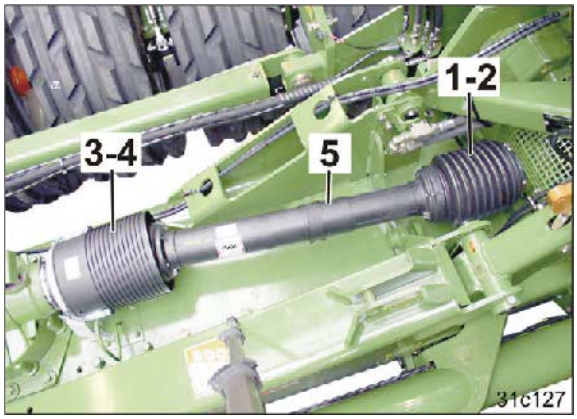

Fig. 243

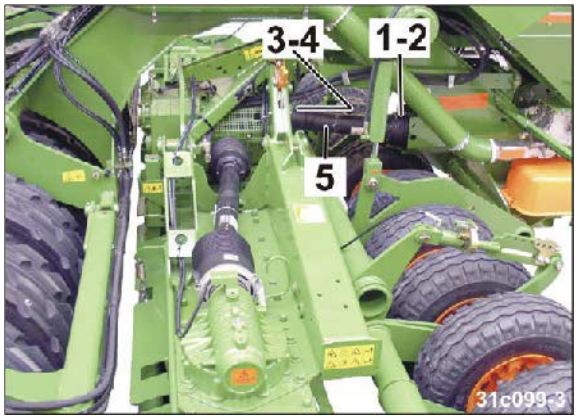

Fig. 244

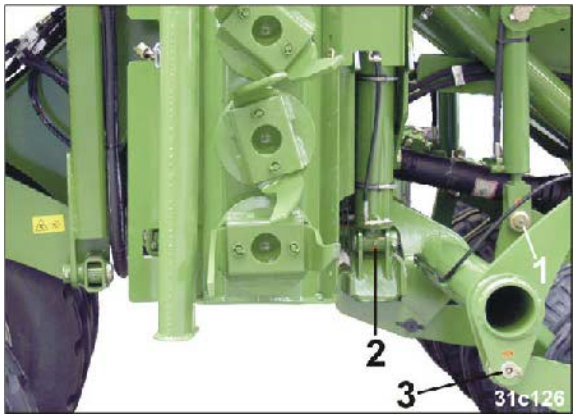

Fig. 245

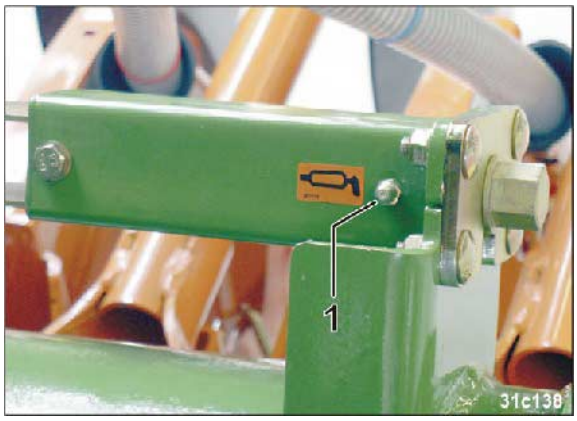

Fig. 246

Fig. 247

12.5 Service plan – overview

Carry out maintenance work when the first interval is reached.

The times, continuous services or maintenance intervals of any third party documentation shall have priority.

Initial commissioning	**Before initial commis-sioning**	Specialist workshop	Check and service the hydraulic hose lines. This inspection has to be re-corded by the operator.	Section 12.16
			Check the oil level Three-gear transmission	Section 12.6
			Check the oil level Angular gearbox	Section 12.7
			Check the oil level	Section 12.8
			Checking the vent pipes	Section 12.8.1
			Checking the tyre inflation pres-sure of the wedge ring tyres (specialist workshop)	Section 12.9
			Checking the tyre inflation pres-sure of the leading rollers	Section 12.10
	After the first 10 operating hours	Specialist workshop	Check and service the hydraulic hose lines. This inspection has to be re-corded by the operator.	Section 12.16
		Specialist workshop	Retighten wheel and hub screws	Section 12.11
		Specialist workshop	Check all screw connections for a secure fit.	
	After the first 50 operating hours	Specialist workshop	Changing transmission fluid Three-gear transmission	Section 12.6
		Specialist workshop	Changing transmission fluid Angular gearbox	Section 12.7
	10 operating hours after a wheel change	Specialist workshop	Retighten wheel and hub screws	Section 12.11

Before beginning work **(daily)**		Visual inspection of the lower link pins	Section 12.15
		Visual inspection of the dual-circuit pneumatic braking system (optional)	Section 12.17.1
hourly **(e.g. when refilling the seed tank)**		Checking the seed planting depth	
		Check and eliminate dirt: • Seed dosing unit • Seed hoses • Distributor heads • Blower fan intake guard screen	
At the end of work **(daily)**		Emptying seed dosing unit	
		Cleaning the machine (as required)	Section 12.3
		Check: Length of the soil tillage tines	
Every week **(at least every 50 operating hours)**	Specialist workshop	Check and service the hydraulic hose lines. The inspection has to be recorded by the owner/operator.	Section 12.16
	Specialist workshop	Clean the blower fan (eliminate danger of imbalance).	Section 12.3
		Check the oil level Three-gear transmission	Section 12.6
		Check the oil level Angular gearbox	Section 12.7
		Check the oil level	Section 12.8
		Checking the vent pipes	Section 12.8.1

Every 2 weeks	Specialist workshop	Wedge ring tyres: Checking the tyre inflation pressure of the wedge ring tyres (specialist workshop)	Section 12.9
		Tyres of the leading rollers: Checking the tyre inflation pressure of the leading rollers	Section 12.10
Every 3 months **(at least every 500 operating hours)**	Specialist workshop	Brake inspection in the specialist workshop	Section 12.17.2
		Exterior inspection of the compressed air tank (dual-circuit pneumatic braking system	Section 12.17.3
	Specialist workshop	Checking the pressure in the compressed air tank of the dual-circuit pneumatic braking system (specialist workshop)	Section 12.17.4
	Specialist workshop	Leak test of the dual-circuit pneumatic braking system (specialist workshop)	Section 12.17.5
	Specialist workshop	Cleaning the line filters of the dual-circuit pneumatic braking system	Section 12.17.6
Before the start of the season (every 6 months)	Specialist workshop	Check and service the hydraulic hose lines. The inspection has to be recorded by the owner/operator.	Section 12.16
At the end of the season (every 6 months)		Servicing roller chains and chain wheels	Section 12.12
		Servicing the sowing shaft bearing	Section 12.13
		Installation instructions for ratchet clutch	Section 12.14.1
Every 12 months	Specialist workshop	Check the service brake system for safe operating condition. This inspection has to be recorded by the operator.	

12.6 Three-gear transmission

Check the oil level

1. Park the machine on a level surface.
2. Unscrew the oil check screw (Fig. 248/1).

The oil level reaches the bottom edge of the inspection opening.

3. Replenish transmission fluid if necessary.
4. Screw in the oil check screw.

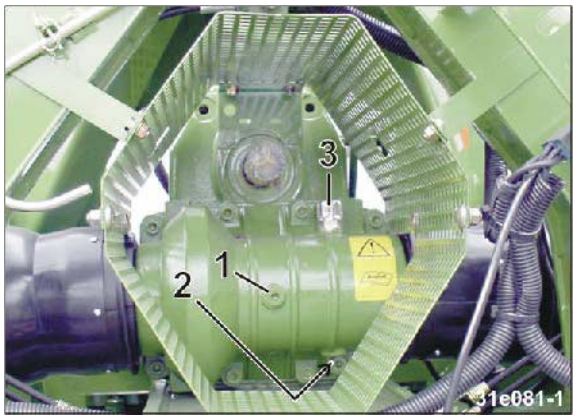

Fig. 248

Changing transmission fluid (specialist workshop)

1. Remove the PTO shaft and guard screen.
2. Place a suitable container below the oil drain opening.
3. Unscrew the oil drain screw (Fig. 248/2).
4. Collect the transmission fluid and dispose of it properly.
5. Screw in the oil drain screw.
6. Unscrew the breather (Fig. 248/3).
7. Add new transmission fluid [see Table (Fig. 249)] through the ventilation opening.
8. Screw in the breather.
9. Install the guard screen and PTO shaft.

Manufacturer	Transmission fluid (synthetic oil)
Mobil	Glygoyle 30 SNR 130563
Mobil	Glygoyle HE 220
ARAL	DEGOL GS 220
BP	Enersyn SG-XP 220
Castrol	Alphasyn PG 220
Castrol	Optiflex A 220

Manufacturer	Transmission fluid (Synthetiköl)
Castrol	Tribol 800 / 220
Fuchs	RENOLIN PG 220
Fuchs Lubritech	GEARMASTER PGP 220
Klüber	Klübersynth GH 6-220
OMV	OMV gear PG 220

Fig. 249

Fill quantity, machine without oil cooler	8,0 Liter

The gearbox is filled with Mobil Glygoyle 30 synthetic oil at the factory.

- All transmission fluid types listed in the table (Fig. 249) can be used instead of Glygoyle 30 transmission fluid.

  Important! If oil types are mixed, warranty claims cannot be accepted.
- Add new, clean transmission fluid only.
- Do not use any other transmission fluid varieties than those listed in the table (Fig. 249).

If proper ventilation is not provided, the gearbox can develop leaks.

- Use the original breather only.
- Check the breather (Fig. 248/3) for secure fit.

12.7 Angular gearbox

Check the oil level

1. Park the machine on a level surface.
2. Unscrew the oil check screw (Fig. 250/1).

The oil level reaches the bottom edge of the inspection opening.

3. Replenish transmission fluid if necessary.
4. Screw in the oil check screw.

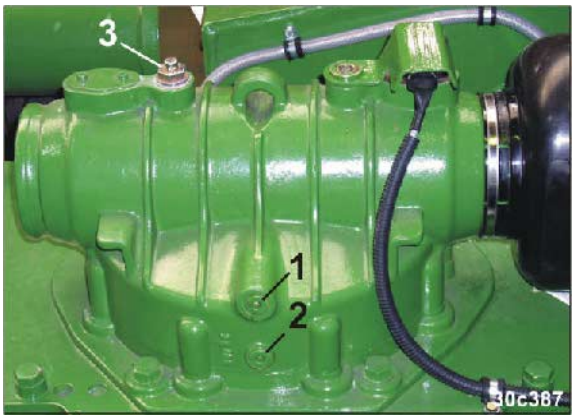

Fig. 250

Changing transmission fluid

1. Place a suitable container below the oil drain opening.
2. Unscrew the oil drain screw (Fig. 250/2).
3. Collect the transmission fluid and dispose of it properly.
4. Screw in the oil drain screw.
5. Unscrew the breather (Fig. 250/3).
6. Add new transmission fluid [see Table (Fig. 251)] through the ventilation opening.
7. Screw in the breather.

Manufacturer	Transmission fluid (synthetic oil)
Mobil	Glygoyle 30 SNR 130563
Mobil	Glygoyle HE 220
ARAL	DEGOL GS 220
BP	Enersyn SG-XP 220
Castrol	Alphasyn PG 220
Castrol	Optiflex A 220

Manufacturer	Transmission fluid (Synthetiköl)
Castrol	Tribol 800 / 220
Fuchs	RENOLIN PG 220
Fuchs Lubritech	GEARMASTER PGP 220
Klüber	Klübersynth GH 6-220
OMV	OMV gear PG 220

Fig. 251

Fill quantity, machine without oil cooler	0,4 Liter

The gearbox is filled with Mobil Glygoyle 30 synthetic oil at the factory.

- All transmission fluid types listed in the table (Fig. 251) can be used instead of Glygoyle 30 transmission fluid.

  Important! If oil types are mixed, warranty claims cannot be accepted.
- Add new, clean transmission fluid only.
- Do not use any other transmission fluid varieties than those listed in the table (Fig. 251).

If proper ventilation is not provided, the gearbox can develop leaks.

- Use the original breather only.
- Check the breather (Fig. 250/3) for secure fit.

12.8 Spur gear trough

Check the oil level

1. Position the machine on a horizontal surface.
2. Open the lid (Fig. 252/1) of the vent pipe for checking and for filling the spur gear trough with transmission fluid [see Tables (Fig. 253 / Fig. 254)].

The teeth of the spur gears in the spur gear trough must be halfway covered with transmission fluid.

3. Check the second spur gear trough.

Fig. 252

Dirt must not get into the spur gear trough during filling.

There is no need to change the oil.

	Fill quantity per spur gear trough	Total filling level per machine (2 spur gear troughs)
KG 603-2	25 litres	50 litres

Fig. 253

Manufacturer	Transmission fluid	Manufacturer	Transmission fluid
Wintershall	ERSOLAN 460	DEA	Falcon CLP 460
Agip	Blasia 460	ESSO	Spartan EP 460
ARAL	Degol BG 460	FINA	Giran 460
Autol	Precis GEP 460	Fuchs	Renep Compound 110
Avia	Avilub RSX 460	Mobil	Mobilgear 634
BP	Energol GR-XP 460	Shell	Omala 460
Castrol	Alpha SP 460	OMV	OMV Gear HST 460

Fig. 254

The spur gear trough is filled at the factory with ERSOLAN 460 transmission fluid.

- All gear oil varieties listed in the table (Fig. 254) can be used for replenishing or the transmission fluid ERSOLAN 460 can be replaced with any of the gear oil varieties listed.
- Add new, clean transmission fluid only.
- Do not use any other gear oil varieties than those listed in the table (Fig. 254).

12.8.1 Checking the vent pipes

1. Check the vent pipe (Fig. 255/1) of the spur gear trough for permeability.
2. Check the vent pipe of the second spur gear trough.

Fig. 255

12.9 Checking the tyre inflation pressure of the wedge ring tyres (specialist workshop)

Check compliance with specified tyre pressure
(see table Fig. 256).

Adhere to the inspection intervals
(see section on Service plan – overview, on page 196).

Tyres	Tyre rated pressure
385/55-22.5	4.6 bar

Fig. 256

12.10 Checking the tyre inflation pressure of the leading rollers

Check compliance with specified tyre pressure
(see table Fig. 257).

Adhere to the inspection intervals
(see section on Service plan – overview, on page 196).

Tyres	Tyre rated pressure
10.0/75-15.3	2.5 bar

Fig. 257

12.11 Retighten wheel and hub screws (specialist workshop)

Retighten the wheel nuts and check the tightening torques (see table Fig. 258).

	Wheel nut	Tightening torque
(1)	M20x1.5 to 10.9	450 Nm

Fig. 258

12.12 Servicing roller chains and chain wheels

After the season make sure all roller chains are:

- cleaned (including the chain wheels and chain tensioner)
- checked
- lubricated with low-viscosity mineral oil (SAE30 or SAE40).

12.13 Servicing the sowing shaft bearing

Lightly grease the seat of the sowing shaft bearing with a thin mineral oil (SAE 30 or SAE 40).

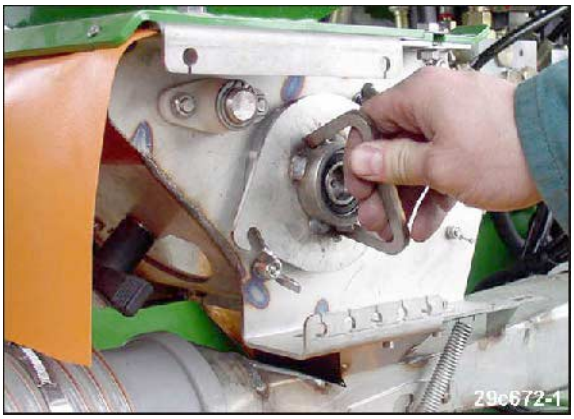

Fig. 259

12.14 Checking/cleaning/lubricating the ratchet clutch (specialist workshop)

When used under normal conditions, the ratchet clutch (Fig. 260/1) is maintenance-free. However, if the clutch engages frequently, check the ratchet clutch for dirt.

To do so, open the ratchet clutch, clean it, and lubricate it with special grease (for more information, refer to the service instructions of the PTO shaft manufacturer).

Use special grease only:

- Agraset 116 or
- Agraset 117.

During installation, observe the installation instructions.

12.14.1 Installation instructions for ratchet clutch

The ratchet clutches must not be mixed up during installation [see Table (Fig. 260)].

The ratchet clutches (1) rotate in the direction of the arrow (2).

The ratchet clutches (1) are installed correctly if, when seen from above, the arrows (2) on the ratchet clutches point in the direction of travel.

The illustration shows the clockwise ratchet clutch, on the right-hand side of the machine as seen in the direction of travel.

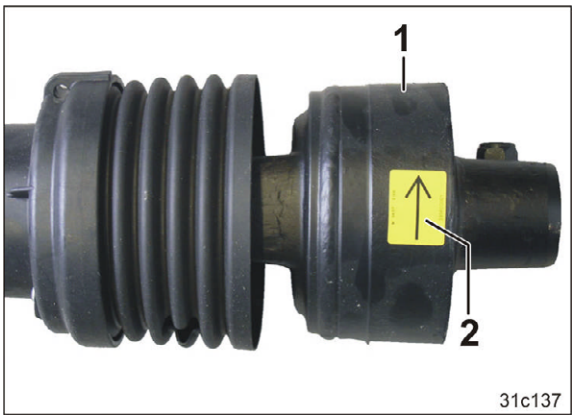

Fig. 260

12.15 Visual inspection of the lower link pins

WARNING

Risk of contusions, catching, and knocks when the machine unexpectedly releases from the tractor!

Check the lower link pin for conspicuous defects whenever the machine is coupled. Replace the draw bar, if there are any clear signs of wear to the lower link pin.

12.16 Hydraulic system

WARNING

Risk of infection through the high pressure hydraulic fluid of the hydraulic system entering the body!

- Only a specialist workshop may carry out work on the hydraulic system.
- Depressurise the hydraulic system before carrying out work on the hydraulic system.
- When searching for leak points, always use suitable aids.
- Never attempt to plug leaks in hydraulic lines using your hand or fingers.

  Escaping high pressure fluid (hydraulic fluid) may pass through the skin and ingress into the body, causing serious injuries!

  If you are injured by hydraulic fluid, contact a doctor immediately. Risk of infection!

- When connecting the hydraulic hose lines to the hydraulic system of connected machines, ensure that the hydraulic system is depressurised on both the drawing vehicle and the trailer.
- Ensure that the hydraulic hose lines are connected correctly.
- Regularly check all the hydraulic hose lines and couplings for damage and impurities.
- Have the hydraulic hose line checked at least once a year by a specialist for proper functioning.
- Replace the hydraulic hose line if it is damaged or worn. Only use original AMAZONE hydraulic hose lines.
- The hydraulic hose lines should not be used for longer than six years, including any storage time of maximum two years. Even with proper storage and approved use, hoses and hose connections are subject to natural ageing, thus limiting the length of use. However, it may be possible to specify the length of use from experience values, in particular when taking the risk potential into account. In the case of hoses and hose connections made from thermoplastics, other guide values may be decisive.
- Dispose of old oil in the correct way. If you have problems with disposal, contact your oil supplier.
- Keep hydraulic fluid out of the reach of children!
- Ensure that no hydraulic fluid enters the soil or waterways.

12.16.1 Labelling hydraulic hose lines

The assembly labelling provides the following information:

Fig. 261/...

(1) Manufacturer's marking on the hydraulic hose line (A1HF)

(2) Date of manufacture of the hydraulic hose line
(11/02 = Year / Month = February 2011)

(3) Maximum approved operating pressure (210 BAR).

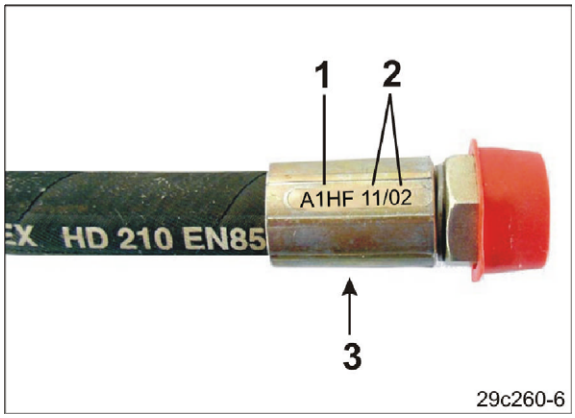

Fig. 261

12.16.2 Maintenance intervals

After the first 10 operating hours, and then every 50 operating hours

1. Check all the components of the hydraulic system for tightness.
2. If necessary, tighten screw unions.

Before each start-up:

1. Check hydraulic hose lines for visible damage.
2. Eliminate any scouring points on hydraulic hose lines and pipes.
3. Replace any worn or damaged hydraulic hose lines immediately.

12.16.3 Inspection criteria for hydraulic hose lines

For your own safety, comply with the following inspection criteria!

Replace hydraulic hose lines, on determining any of the following during the inspection:

- Damage to the outer layer up to the ply (e.g. scouring points, cuts, cracks).
- Brittleness of the outer layer (crack formation of the hose material).
- Deformations which do not match the natural shape of the hose or the hose line. Both in a depressurised and pressurised state or when bent (e.g. layer separation, bubble formation, pinching, bends).
- Leak points.
- Damage or deformation of the hose assembly (sealing function restricted); minor surface damage is not a reason for replacement.
- Movement of the hose out of the assembly.
- Corrosion of assembly, reducing the function and tightness.

- Installation requirements not complied with.
- Life span of 6 years has been exceeded.

  The date of manufacture of the hydraulic hose line on the assembly is decisive for determining these six years. If the date of manufacture on the assembly is "2011", then the hose should not be used beyond February 2017. See also "Labelling of hydraulic hose lines".

12.16.4 Installation and removal of hydraulic hose lines

When installing and removing hydraulic hose lines, always observe the following information:

- Only use original AMAZONE hydraulic hose lines.
- Ensure cleanliness.
- You must always install the hydraulic lines so that, in all states of operation:
  - There is no tension, apart from the hose's own weight.
  - There is no possibility of jolting on short lengths.
  - Outer mechanical influences on the hydraulic hose lines are avoided.

    Use appropriate arrangements and fixing to prevent any scouring of the hoses on components or on each other. If necessary, secure hydraulic hose lines using protective covers. Cover sharp-edged components.
  - The approved bending radii may not be exceeded.
- When connecting a hydraulic hose line to moving parts, the hose length must be appropriate so that the smallest approved bending radius is not undershot over the whole area of movement and/or the hydraulic hose line is not overtensioned.
- Fix the hydraulic hose lines to the intended fixing points. There, avoid hose clips, which impair the natural movement and length changes of the hose.
- It is forbidden to paint over hydraulic hose lines!

12.17 Dual-circuit pneumatic braking system

DANGER

- **Only specialist workshops or recognised brake services may perform adjustment and repair work on the brake system.**
- **Have the brake system checked thoroughly on a regular basis (see section on "Service plan – overview", on page 196).**
- **Be particularly careful with welding, burning and drilling work in the vicinity of brake lines!**
- **No welding or soldering may be performed on valve fittings or pipes. Any damaged parts must be replaced.**
- **Always perform a braking test after any adjusting or repair work on the braking system.**
- **For servicing and maintenance work on the braking system observe the section " Safety information for users".**

12.17.1 Visual inspection of the dual-circuit pneumatic braking system

Before moving off, check the brake system to ensure that the following criteria are met:

- Piping, hose lines and hose couplings must not be externally damaged or rusted.
- Hinges, e.g. on fork heads, must be properly secured, easy to move, and not worn out.
- Ropes and cables
  - Must be properly run.
  - May not have any visible cracks.
  - May not be knotted.
- Check the brake cylinder piston stroke.
  Only 2/3 of the stroke of the brake cylinder may be utilised. Otherwise, readjust the brake (specialist workshop).
- Replace damaged dust covers.
- Carry out an exterior inspection of the compressed air tank (see section on "Exterior inspection of the compressed air tank", on page 213).

If the visual inspection, function or action testing of the service brake system shows any signs of deficiencies, have a thorough inspection of all components performed immediately at a specialist workshop.

12.17.2 Brake inspection in the specialist workshop

The following tasks must be carried out in a specialist workshop every 3 months, but at least every 500 operating hours:

- Check the service brake system for safe operating condition
- Check the wear of the brake linings.

  This maintenance interval is a recommendation. Depending on the deployment, e.g. constant driving on hilly terrain, this may have to be shortened.

  Renew the brake shoes at a residual lining thickness of less than 1.5 mm (use only genuine brake shoes with type-tested brake linings). When doing so the shoe return springs may have to be renewed.
- Checking the pressure in the compressed air tank (see on page 213).
- Leak test of the dual-circuit pneumatic braking system (see on page 213).
- Cleaning the line filters (see on page 214)

CAUTION

Observe the legal regulations for all service work.

Only genuine spare parts may be used.

The brake valve settings laid down by the manufacturer must not be altered.

In Germany Section 57 of the regulation BGV D 29 of the industrial injuries mutual insurance organisation requires as follows:
the keeper has to have vehicles tested as required, however at least once annually, by an expert as to their safe operating condition.

12.17.3 Exterior inspection of the compressed air tank (dual-circuit pneumatic braking system)

Exterior inspection of the compressed air tank (Fig. 262/1).

If the compressed air tank moves in the tensioning bands (Fig. 262/2)

→ tension or replace the compressed air tank

If the compressed air tank has any external corrosion damage or is damaged

→ replace the compressed air tank.

If the rating plate (Fig. 262/3) is rusty, loose or the rating plate is missing from the compressed air tank:

→ replace the compressed air tank.

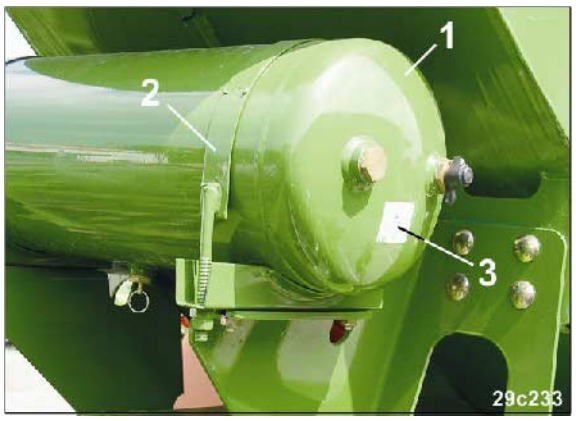

Fig. 262

The compressed air tank may be replaced in a specialist workshop only.

12.17.4 Checking the pressure in the compressed air tank of the dual-circuit pneumatic braking system (specialist workshop)

1. Connect a pressure gauge to the test connection on the compressed air tank.
2. Run the tractor engine (approx. 3 mins.) until the compressed air tank has filled.
3. Check whether the pressure gauge displays the setpoint range 6.0 to 8.1 bar.
4. If the reading drops below or exceeds the setpoint range, have the defective parts of the braking system replaced in a specialist workshop.

12.17.5 Leak test of the dual-circuit pneumatic braking system (specialist workshop)

- Test all connections, pipe, hose and screw unions for sealtightness
- Eliminate any abrasion points on pipes and hoses
- Replace any porous and damaged hoses (specialist workshop)
- The dual-circuit pneumatic braking system is considered free of leaks if the pressure drop within 10 minutes with the engine shut down is no greater than 0.10 bar, i.e. about 0.6 bar per hour.
- If the values are not maintained, have the leakage sealed or the defective components of the
- braking system replaced at a specialist workshop.

12.17.6 Cleaning the line filters of the dual-circuit pneumatic braking system

The dual-circuit pneumatic braking system has:

- One brake line filter (Fig. 263/1)
- One supply line filter (Fig. 263/2)

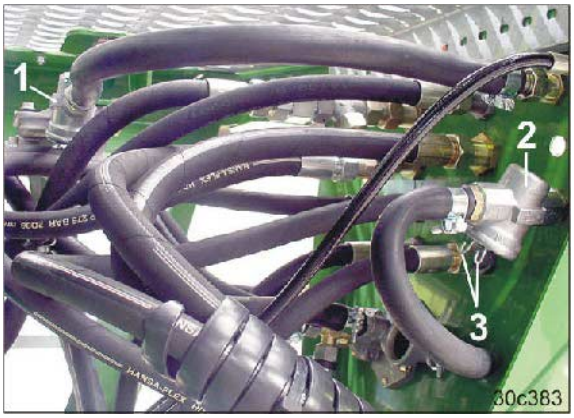

Fig. 263

Cleaning the line filters (specialist workshop)

1. Press the two lugs (Fig. 263/3) together and take out the closure piece complete with O-ring, pressure spring and filter insert.
2. Clean the filter insert with petrol or thinner (wash it) and dry with compressed air.
3. When re-assembling in the reverse order, ensure that the O-ring does not jam in the guide slot.

12.18 Workshop settings and repair work

12.18.1 Adjusting the tramline to the track width/wheelmark spacing (specialist workshop)

WARNING

The distributor head is located at the centre of the machine.

Apply the tractor parking brake, switch off the tractor engine and remove the ignition key.

Before approaching, clean the path to the distributor head and the area of the distributor head (danger of slippage).

There is the risk of an accident on the path to the distributor head and in the area of the distributor head.

12.18.1.1 Adjusting the tramline to the track width of the cultivating tractor (specialist workshop)

When the machine is delivered or when buying a new tractor, check that the tramline is set to the wheel mark spacing (Fig. 264/a) of the tractor.

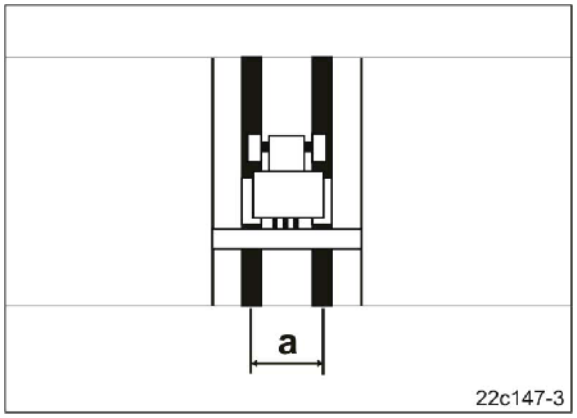

Fig. 264

The seed line tubes (Fig. 265/1) of the tramline coulters must be fixed to the distributor head openings, which can be closed by the sliders (Fig. 265/2).
If necessary, interchange the seed line tubes.

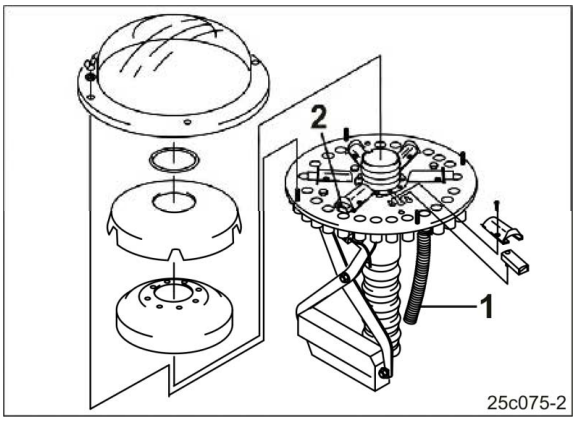

Fig. 265

Set the track discs of the tramline marker (if present) to the new track.

12.18.1.2 Adjusting the tramline to the track width of the cultivating tractor (specialist workshop)

When the machine is delivered or when buying a new cultivating tractor, check that the tramline is set to the track width (Fig. 266/a) of the tractor.

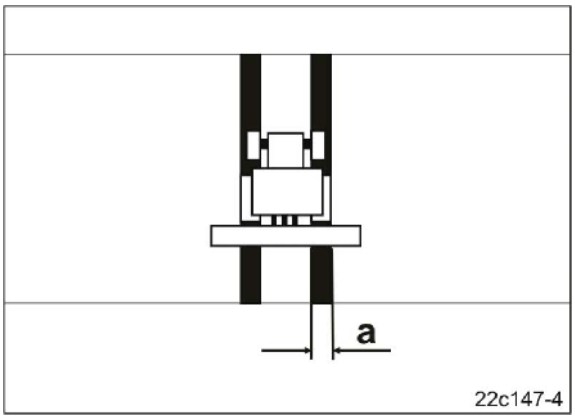

Fig. 266

The track changes with the number of coulters not outputting seed when the tramlines are created.

To create two tracks, in the distributor head it is possible to close the sliders (Fig. 265/2):

- For machines with a working width up to 6 m, up to 6 openings.

Deactivate any non-required sliders (Fig. 265/2) (see on page 217). Deactivated sliders do not close the feed lines to the tramline coulters.

Always activate or deactivate pairs of sliders positioned opposite each other on the base plate.

Activating or deactivating sliders:

1. Apply the tractor parking brake, switch off the tractor engine and remove the ignition key.
2. Set the tramline counter in the AMATRON+ to "0" as for creating tram-lines.
3. Switch off the AMATRON+.
4. Remove the outer distributor cover (Fig. 267/1).
5. Remove the ring (Fig. 267/2).
6. Remove the inner distributor cover (Fig. 267/3).
7. Remove the foam insert (Fig. 267/4).
8. Slacken the screws (Fig. 268/1).
9. Remove the slider tunnel (Fig. 268/2).

Activating the sliders:

10. The slider (Fig. 268/3) is in the guide, as shown in the diagram.

Deactivating the sliders:

11. Turn the sliders around (Fig. 268/3) and push them into the drill hole (Fig. 268/4).
12. Screw the slider tunnel (Fig. 268/2) onto the base plate.

13. Install the foam insert (Fig. 269/1).
14. Install the inner distributor cover (Fig. 269/2).
15. Install the ring (Fig. 269/3).
16. Install the outer distributor cover (Fig. 269/4).
17. Check the function of the tramline circuit.

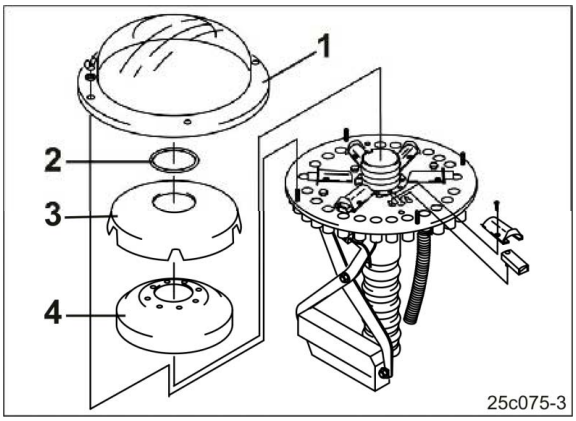

Fig. 267

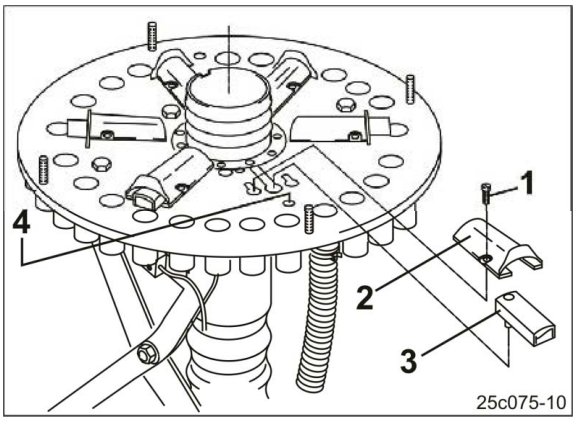

Fig. 268

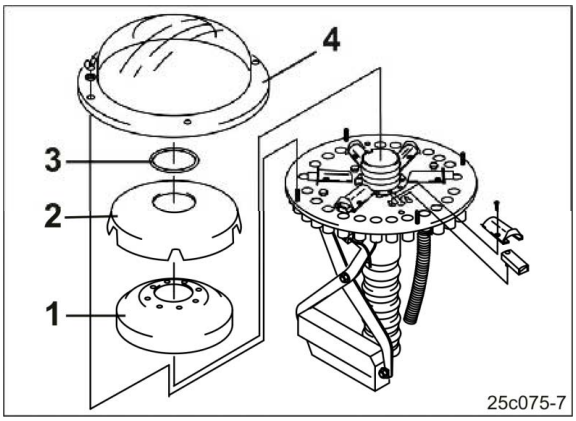

Fig. 269

12.18.2 Setting the track marker for correct fitting in the transport bracket (workshop)

When the track marker is folded in, the roller (Fig. 270/1) runs on the raceway (Fig. 270/2) into the mounting.

To set the track marker:

1. Apply the tractor parking brake, switch off the tractor engine and remove the ignition key.
2. Release the lock nut.
3. Adjust the screw (Fig. 270/3) until the roller (Fig. 270/1) of the track marker is running properly over the raceway (Fig. 270/2) into the mounting.
4. Tighten the lock nut.

Fig. 270

DANGER

Apply the tractor parking brake, shut off the tractor engine and remove the ignition key before working on the track marker.

12.18.3 Replacing the soil tillage tines (specialist workshop)

1. Fold the machine extension arm in.
2. Remove the lynch pin (Fig. 271/1).
3. Remove the pin (Fig. 271/2) from the tool carrier by striking it in an upwards direction.
4. Replace the soil tillage tines (Fig. 271/3) [see Table (Fig. 272)].
5. Fasten the soil tillage tines using the pin and secure it using the lynch pin.

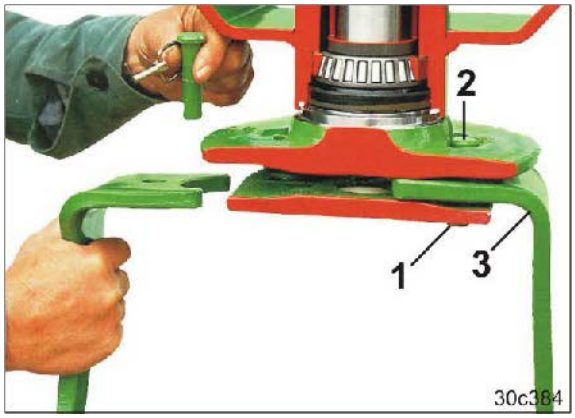

Fig. 271

Direction of rotation of the soil tillage tines

The machine is equipped with two varieties of soil tillage tines (clockwise/anticlockwise).

Soil tillage tines (1),
clockwise (see direction of the arrow).

Soil tillage tines (2),
anticlockwise (see direction of the arrow).

Note:
The leftmost tool carrier, viewed in the direction of travel, always rotates clockwise.

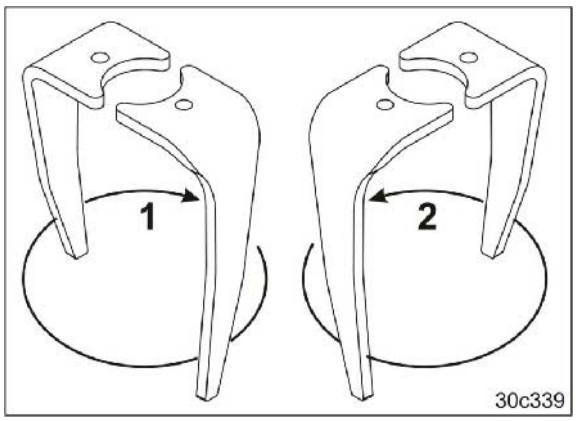

Fig. 272

The soil tillage tines of the rotary cultivator are "on grip" when they are fastened to the tool carriers as shown in the table (Fig. 272).

12.18.4 Adjusting the unfolding speed of the rotary cultivator (specialist workshop)

A higher unfolding speed of the rotary cultivator than that set at the factory can cause damage to the machine. Therefore, make a correction only in exceptional cases with sufficient reason.

Use a hexagon socket wrench (Fig. 273/1) to change the diameter of the opening of a throttle and thus the oil supply to the hydraulic cylinder. The machine has 4 throttles.

1. Release the lock nut.
2. Make the adjustment [see Table (Fig. 273)].Note:
   Make the same adjustment on all 4 throttles.
3. Tighten the lock nut.
4. Check the settings with particular caution.

- **To increase the folding speed:**
  Unscrew the hexagon socket head screw using a hexagon socket wrench (1) by a maximum of **one-quarter turn**.
- **To decrease the folding speed:**
  Screw in the hexagon socket head screw using a hexagon socket wrench (1), by a maximum of **one-quarter turn**.

DANGER

- **Observe the maximum adjustment distances (one-quarter turn).**
- **Make the same adjustments on all four throttles.**
- **Check the settings immediately.**

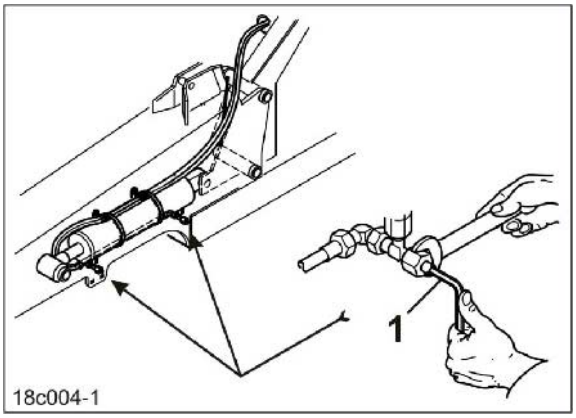

Fig. 273

12.18.5 Repairs to the pressure tank (workshop)

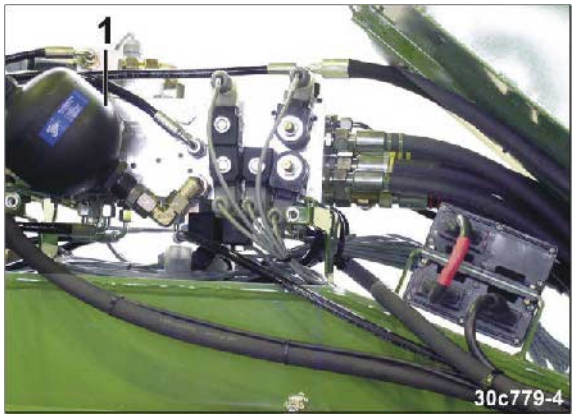

Fig. 274

Fig. 275

The machine can have up to two pressure tanks:

- One standard factory-installed pressure tank (Fig. 274/1)
- One pressure tank (Fig. 275/1) installed with the hydraulic service brake system.

Functional description
of the standard factory-installed pressure tank (Fig. 274/1)

For re-compaction of the soil the wedge ring tyres are subjected to the weight of the machine.

Part of the machine's weight is transmitted via the folding cylinders to the wedge ring tyres. As the hydraulic fluid is almost non-compressible, the pressure does not remain constant even when the folding cylinders are shut off, i.e. when the oil is cooling down. The folding cylinders retract by several millimetres. In order to compensate for the volume loss, during the folding out procedure oil is stored at a pressure of approx. 100 bar in a pressure tank filled with nitrogen (Fig. 274/1).

In the event of a repair observe the following:

The hydraulic system and the pressure tank connected to it are under a constant high pressure (approx. 100 bar).

Release of the hydraulic hose lines or the unscrewing or opening of the pressure tank in the event of a repair may be performed only in a specialist workshop with suitable auxiliary means.

For all work on the pressure tank and the hydraulic system connected to it observe the standard EN 982 (safety requirements for fluid systems).

DANGER

The hydraulic system and the pressure tank connected to it are under a constant high pressure (approx. 100 bar).

12.18.6 Replacing the RoTeC coulter wear tip (workshop)

1. Remove the plastic disc (Fig. 276/1).
2. Release the cylinder screw (Fig. 276/2) (screw tightening torque 30-35 Nm).
3. Replace the wear tip (Fig. 276/3) and install in reverse sequence.

The wear tip (Fig. 276/3) must not project beyond the edge of the sowing disc (Fig. 276/4). If necessary, replace the sowing disc.

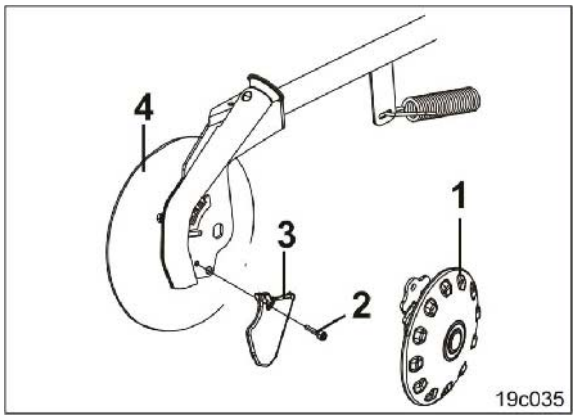

Fig. 276

12.19 Lower link pin

WARNING

Risk of contusions, catching, and knocks when the machine unexpectedly releases from the tractor!

Check the lower link pin for conspicuous defects whenever the machine is coupled. Replace the draw bar, if there are any clear signs of wear to the lower link pin.

12.20 Screw tightening torques

Thread	Width across flats [mm]	Tightening torques [Nm] as a function of the bolt/nut grade		
		8.8	10.9	12.9
M 8	13	25	35	41
M 8x1		27	38	41
M 10	16 (17)	49	69	83
M 10x1		52	73	88
M 12	18 (19)	86	120	145
M 12x1.5		90	125	150
M 14	22	135	190	230
M 14x1.5		150	210	250
M 16	24	210	300	355
M 16x1.5		225	315	380
M 18	27	290	405	485
M 18x1.5		325	460	550
M 20	30	410	580	690
M 20x1.5		460	640	770
M 22	32	550	780	930
M 22x1.5		610	860	1050
M 24	36	710	1000	1200
M 24x2		780	1100	1300
M 27	41	1050	1500	1800
M 27x2		1150	1600	1950
M 30	46	1450	2000	2400
M 30x2		1600	2250	2700

Tightening torques of the wheel and hub screws [see Table (Fig. 258), on page 206].

13 Hydraulic diagrams

13.1 Hydraulic diagram (972610) – Cirrus 6002 Activ

Fig. 277/...	Designation	Fig. 277/...	Designation
0010	Tractor hydraulics, tractor	0330	Folding frame lock
0020	Pressure, coulter pressure	0340	Valves, left
0030	Pressure, working position	0350	Breakage protection, left
0040	Control block, Cirrus Activ	0360	Valves, right
0050	Track marker, right	0370	Breakage protection, right
0060	Track marker left	0380	Rotary cultivator lifting, right
0070	Pressure sensor, working position	0390	Rotary cultivator lifting, left
		0400	Folding frame pressure reservoir
Pre-emergence marker (PEM) for double tramline (optional):		0410	Rotary cultivator lock, left
0080	Pre-emergence marker (PEM) for double tramline (optional)	0420	Rotary cultivator lock, right
0090	PEM valve, left	0430	Rotary cultivator valves, left
0100	PEM valve, right	0440	Check valve
0110	PEM, left, outer	0450	Check valve
0120	PEM, left, inner	0460	Check valve
0130	PEM, right, inner	0470	Rotary cultivator valves, right
0140	PEM, right, outer	0480	Check valve
Pre-emergence marker (PEM) for normal tramline:		0490	Control valve, rotary cultivator float position
0150	Pre-emergence marker (PEM) for normal tramline (optional)	0500	Ball valve, lorry loading
0160	PEM valve, right	0510	Control block, rotary cultivator depth
0170	PEM, left	0520	Rotary cultivator depth, outer, left
0180	PEM, right	0530	Rotary cultivator depth, centre, left
		0540	Rotary cultivator depth, centre, right
0190	Switching valve, rotary cultivator lifting	0560	Rotary cultivator depth, outer, right
0200	Running gear, quick lowering	0570	Protection valve, blower fan drive
0210	Running gear lifting, left	0580	Blower fan drive
0220	Running gear lifting, right	0590	2 cable ties, red
0230	Extension arm, quick lowering	0600	1 cable tie, red
0240	Lifting, outer, left	0610	2 cable ties, blue
0250	Lifting, outer, right	0620	1 cable tie, blue
0260	Coulter pressure, left	0630	2 cable ties, green
0270	Coulter pressure, centre	0640	1 cable tie, green
0280	Coulter pressure, right	0650	2 cable ties, yellow
0290	Hydraulic harrow pressure (optional)	0660	1 cable tie, yellow
0300	Harrow pressure, left		
0310	Harrow pressure, centre		
0320	Harrow pressure, right		

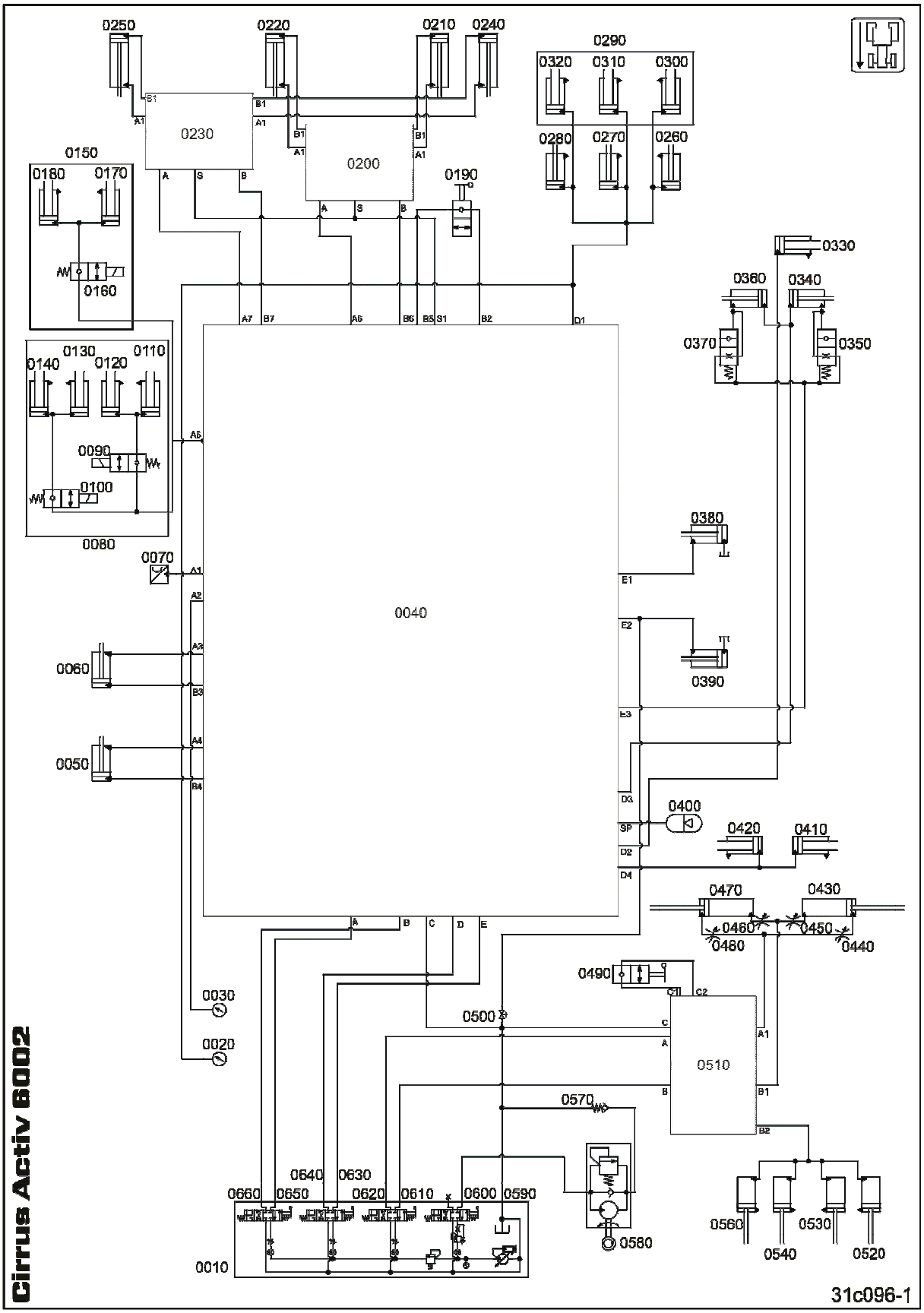
0250
0220
0210
0240
0290
0320
0310
0300
0280
0270
0260
0230
0200
0190
0150
0180
0170
0160
0330
0360
0340
0370
0350
0130
0110
0140
0120
0090
0100
0080
0070
0380
0040
0390
0060
0050
0400
0420
0410
0470
0430
0460
0450
0480
0440
0490
0030
0500
0020
0510
0570
0640
0630
0660
0650
0620
0610
0600
0590
0560
0530
0540
0520
0010
Cirrus Activ 6002
31c096-1

Fig. 277

AMAZONEN-WERKE

H. DREYER GmbH & Co. KG

Postfach 51
D-49202 Hasbergen-Gaste
Germany

Tel.: + 49 (0) 5405 501-0
Fax: + 49 (0) 5405 501-234
e-mail: amazone@amazone.de
http:// www.amazone.de

Plants: D-27794 Hude • D-04249 Leipzig • F-57602 Forbach
Branches in England and France

Manufacturers of mineral fertiliser spreaders, field sprayers, seed drills, soil cultivation machines, multipurpose warehouses and communal units