AMAZONE

Original operating manual

Mechanical pack top seed drill

Cataya 3000/4000 Super

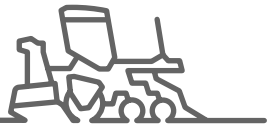

SmartLearning

www.amazone.de

Please enter the identification data of the implement. The identification data can be found on the rating plate.

TABLE OF CONTENTS

1 About this operating manual 1

1.1 Copyright 1
1.2 Presentations used 1
1.2.1 Warnings and signal words 1
1.2.2 Additional instructions 2
1.2.3 Instructions 2
1.2.4 Listings 3
1.2.5 Item numbers in illustrations 3
1.2.6 Direction information 4
1.3 Other applicable documents 4
1.4 Your opinion is important 4

2 Safety and responsibility 5

2.1 Basic safety instructions 5
2.1.1 Meaning of the operating manual 5
2.1.2 Safe operating organization 5
2.1.3 Recognizing and avoiding dangers 10
2.1.4 Safe operation and handling of the implement 11
2.1.5 Safe maintenance and modification 13
2.2 Safety routines 17

3 Intended use 19

4 Product description 20

4.1 Implement overview 20
4.2 Function of the implement 21
4.3 Special equipment 22
4.4 Protective devices 23
4.4.1 Grating screen 23
4.4.2 Chain drive cover 24
4.4.3 Metering unit cover 24
4.4.4 Road safety bars 24
4.5 Warning symbols 25
4.5.1 Positions of the warning symbols 25
4.5.2 Structure of the warning symbols 27
4.5.3 Description of the warning symbols 27
4.6 Rating plate on the implement 31
4.7 GewindePack 32
4.8 Hand wash tank 32
4.9 Metering system 33
4.10 Universal operating tool 33
4.11 Camera system 34
4.12 Radar sensor 34
4.13 Lighting 35
4.13.1 Rear lighting and identification for road travel 35
4.13.2 Work lights 35
4.14 Mounting frame 36
4.15 RoTeC coulter 36
4.16 TwinTec coulter 37
4.17 Exact following harrow 38
4.18 Coulter harrow 38
4.19 Roller harrow 39
4.20 Tramline marker 39
4.21 Track markers 40
4.22 GreenDrill 40

5 Technical data 41

5.1 Hopper volume 41
5.2 Dimensions 41
5.3 QuickLink quick-coupling system 41
5.4 Optimal working speed 41
5.5 Soil tillage tools 42
5.6 Permissible mounting categories 42
5.7 Noise emission data 42
5.8 Drivable slope inclination 42

5.9 Capacity characteristics of the tractor 43

6 Preparing the implement 44

6.1 Calculating the required tractor characteristics 44
6.2 Coupling the implement 47
6.2.1 Coupling the ISOBUS or control computer 47
6.2.2 Coupling hydraulic hose lines 47
6.2.3 Coupling the power supply 49
6.2.4 Connecting the camera system 49
6.2.5 Coupling the 3-point mounting frame 50
6.2.6 Coupling the pack top seed drill 50
6.3 Preparing the implement for use 53
6.3.1 Adjusting the working position sensor 53
6.3.2 Operating the hopper cover 54
6.3.3 Adjusting the fill level sensor 54
6.3.4 Attaching the seed guide elements 56
6.3.5 Filling the hopper 57
6.3.6 Adjusting the placement depth on the TwinTeC coulter 58
6.3.7 Adjusting the placement depth on the RoTeC coulter 58
6.3.8 Manual coulter pressure adjustment 59
6.3.9 Hydraulic coulter pressure adjustment 60
6.3.10 Adjusting the coulter harrow 62
6.3.11 Adjusting the exact following harrow 64
6.3.12 Adjusting the roller harrow 69
6.3.13 Adjusting the tramlines 71
6.3.14 Operating one-sided switching 79
6.3.15 Operating the loading board steps 80
6.3.16 Preparing the metering unit for operation 81
6.4 Preparing the implement for road travel 105
6.4.1 Folding the tramline marker on the implement frame 105
6.4.2 Folding the tramline marker on the exact following harrow 106
6.4.3 Bringing the exact following harrow or seed harrow into transport position 106
6.4.4 Attaching the road safety bars on the exact following harrow 107
6.5 Calculating the permissible payload 107

7 Using the implement 109

7.1 Removing the road safety bars 109
7.2 Bringing the exact following harrow or seed harrow into working position 110
7.3 Unfolding the tramline marker 111
7.3.1 Unfolding the tramline marker on the implement frame 111
7.3.2 Unfolding the tramline marker on the harrow frame 111
7.4 Using the implement 111
7.5 Checking the placement depth 112
7.6 Turning on headlands 112

8 Rectifying faults 114

9 Parking the implement 121

9.1 Emptying hopper and metering units 121
9.2 Parking the TwinTeC coulter 125
9.3 Uncoupling the hydraulic hose lines 125
9.4 Uncoupling the ISOBUS or control computer 126
9.5 Uncoupling the power supply 126
9.6 Uncoupling the seeding combination 127
9.7 Parking the pack top seed drill 127

10 Maintaining the implement 131

10.1 Cleaning the implement 131
10.2 Maintaining the implement 132
10.2.1 Maintenance schedule 132
10.2.2 Checking the TwinTeC cutting disk spacing 133
10.2.3 Checking the TwinTeC cutting disks 134

10.2.4	Checking the TwinTeC depth control wheel scraper	135
10.2.5	Checking the TwinTeC depth control wheel	136
10.2.6	Checking RoTeC depth control disks and RoTeC depth control wheels	136
10.2.7	Checking the tightening torque of the radar sensor bolts	138
10.2.8	Lubricating the drive chain on the left metering drive	138
10.2.9	Lubricating the drive chain on the right metering drive	139
10.2.10	Checking the cutting disks	140
10.2.11	Cleaning the hopper	141
10.2.12	Checking the top link pin and lower link pin	142
10.2.13	Checking the hydraulic hose lines	142
10.2.14	Checking the RoTeC furrow formers	143
10.2.15	Checking the home position of the bottom flaps	143
10.2.16	Cleaning the hand wash tank	144
10.3	**Lubricating the implement**	**145**
10.3.1	Overview of lubrication points	146
10.4	**Lubricating chain drives**	**147**
10.4.1	Lubricating the drive chain on the left metering drive	147
10.4.2	Lubricating the drive chain on the right metering drive	148

11 Loading the implement 150

11.1	**Lifting the implement**	**150**
11.2	**Lashing the implement**	**150**

12 Appendix 152

12.1	**Bolt tightening torques**	**152**
12.2	**Other applicable documents**	**153**

13 Directories 154

13.1	**Glossary**	**154**
13.2	**Index**	**155**

About this operating manual

1

CMS-T-00000081-E.1

1.1 Copyright

CMS-T-00012308-A.1

Reprinting, translation, and reproduction in any form, including excerpts, require the written consent of AMAZONEN-WERKE.

1.2 Presentations used

CMS-T-005676-D.1

1.2.1 Warnings and signal words

CMS-T-00002415-A.1

Warnings are indicated by a vertical bar with a triangular safety symbol and a signal word. The signal words *"DANGER"*, *"WARNING"* or *"CAUTION"* describe the severity of the potential danger and have the following meanings:

DANGER

- Indicates imminent danger with high risk of severe physical injury, such as loss of limb or death.

WARNING

- Indicates a possible danger with moderate risk of severe or fatal physical injury.

CAUTION

- Indicates a danger with low risk of minor or moderate physical injury.

1.2.2 Additional instructions

CMS-T-00002416-A.1

IMPORTANT

- Indicates a risk of implement damage.

ENVIRONMENTAL INFORMATION

- Indicates a risk of environmental damage.

NOTE

Indicates application tips and instructions for optimal use.

1.2.3 Instructions

CMS-T-00000473-B.1

Numbered instructions

CMS-T-005217-B.1

Actions that must be performed in a specific sequence are presented as numbered instructions. The specified sequence of the actions must be complied with.

Example:

1. Instruction 1
2. Instruction 2

1.2.3.1 Instructions and responses

CMS-T-005678-B.1

Responses to instructions are indicated by an arrow.

Example:

1. Instruction 1

➡ Response to instruction 1

2. Instruction 2

1.2.3.2 Alternative instructions

CMS-T-00000110-B.1

Alternative instructions are introduced with the word *"or"*.

Example:

1. Instruction 1

   or

   Alternative instruction

2. Instruction 2

Instructions with only one action

CMS-T-005211-C.1

Instructions with only one action are not numbered, but rather are presented with an arrow.

Example:

► Instruction

Instructions without a specific sequence

CMS-T-005214-C.1

Instructions that do not require a specific sequence are shown as a list with arrows.

Example:

► Instruction

► Instruction

► Instruction

1.2.4 Listings

CMS-T-000024-A.1

Listings without a mandatory sequence are shown as a list with bullet points.

Example:

- Point 1
- Point 2

1.2.5 Item numbers in illustrations

CMS-T-000023-B.1

A framed number in the text, e.g. a **1**, indicates an item number in an adjacent figure.

1.2.6 Direction information

CMS-T-00012309-A.1

Unless otherwise specified, all direction information applies in the direction of travel.

1.3 Other applicable documents

CMS-T-00000616-B.1

A list of other applicable documents is provided in the Appendix.

1.4 Your opinion is important

CMS-T-000059-C.1

Dear reader, our operating manuals are updated regularly. Your suggestions for improvement help us provide increasingly user-friendly operating manuals. Please send us your suggestions by post, fax or email.

AMAZONEN-WERKE H. Dreyer SE & Co. KG
Technische Redaktion
Postfach 51
D-49202 Hasbergen

Fax: +49 (0) 5405 501-234
E-Mail: td@amazone.de

CMS-I-00000638

Safety and responsibility

2

CMS-T-00011143-A.1

2.1 Basic safety instructions

CMS-T-00011144-A.1

2.1.1 Meaning of the operating manual

CMS-T-00011165-A.1

Comply with the operating manual

The operating manual is an important document and it is part of the implement. It is intended for the user and contains safety-related information. Only the procedures specified in the operating manual are safe. Failure to comply with the operating manual can result in severe injury or death.

- ► The safety section must be completely read and the instructions must be complied with before first use of the implement.
- ► In addition, read the relevant sections of the operating manual before starting work.
- ► Keep the operating manual in a safe place.
- ► Keep the operating manual available.
- ► Hand over the operating manual to the subsequent user.

2.1.2 Safe operating organization

CMS-T-00011150-A.1

2.1.2.1 Qualifications of personnel

CMS-T-00011156-A.1

2.1.2.1.1 Requirements imposed on all persons who work with the implement

CMS-T-00011160-A.1

If the implement is used improperly, people can be injured or killed. To prevent accidents due to improper use, every person who works with

the implement must meet the following minimum requirements:

- The person must be physically and mentally capable of controlling the implement.
- The person must be capable of safely performing the tasks with the implement as specified in this operating manual.
- The person must understand the implement's mode of operation as it relates to their tasks and must be able to recognize and avoid the dangers associated with the work.
- The person must have understood the operating manual and can implement the information that is provided in the operating manual.
- The person must know how to drive vehicles safely.
- For road travel, the person must know the relevant road traffic regulations and must have the prescribed driver's license.

2.1.2.1.2 Qualification levels

CMS-T-00011159-A.1

The following qualification levels are the prerequisites for working with the implement:

- Farmer
- Agricultural helper

The activities described in this operating manual can always be performed by persons with the qualification level, "Agricultural helper".

2.1.2.1.3 Farmer

CMS-T-00011158-A.1

Farmers use agricultural machines to cultivate fields. They decide on the use of an agricultural machine for a specific objective.

Farmers are categorically familiar with work involving agricultural machines and can instruct agricultural helpers in how to use the machines, if necessary. They can perform specific, simple repairs and maintenance tasks on agricultural machines themselves.

For example, farmers can be:

- Farmers with higher education or training from a technical college
- Farmers by experience (e.g. inherited farm, extensive practical knowledge)
- Contractors who work on behalf of farmers

Activity example:

- Safety instruction of agricultural helpers

2.1.2.1.4 Agricultural helper

CMS-T-00011157-A.1

Agricultural helpers use agricultural machines on behalf of the farmer. They are instructed in the use of the machine by the farmer, and work independently according to the farmer's work order.

For example, agricultural helpers can be:

- Seasonal workers and laborers
- Prospective farmers in training
- Employees of the farmer (e.g. tractor driver)
- Members of the farmer's family

Activity examples:

- Driving the machine
- Adjusting the working depth

2.1.2.2 Workstations and persons accompanying the driver

CMS-T-00011151-A.1

Persons accompanying the driver

Persons accompanying the driver can fall due to implement movements, be run over and suffer severe or fatal injuries. Objects thrown upward by the tractor or implement can hit and injure persons accompanying the driver.

► Never allow persons to ride on the implement.

► Never allow people to climb onto the moving implement.

2.1.2.3 Danger for children

CMS-T-00011161-A.1

Children in danger

Children cannot assess dangerous situations and may behave unpredictably. As a result, children are particularly at risk.

- Keep children at a safe distance.
- *When you drive out or activate implement movements,* ensure that there are no children in the danger area.

2.1.2.4 Operational safety

CMS-T-00011152-A.1

2.1.2.4.1 Perfect technical condition

CMS-T-00011155-A.1

Only use properly prepared implements

Operational safety of the implement is only ensured with proper preparation as specified in this operating manual. This can result in accidents and persons can be severely injured or killed.

- Prepare the implement as specified in this operating manual.

Danger due to implement damage

Implement damage can impair the operational safety of the implement and cause accidents. This can result in severe or fatal injuries.

- *If you suspect or determine that there is damage,* secure the tractor and implement.
- Immediately repair damage that can affect safety.
- Repair the damage as specified in this operating manual.
- Any damage that you cannot repair yourself as specified in this operating manual must be repaired by a qualified specialist workshop.

Comply with the technical limit values

Failure to comply with the technical limits values of the implement can cause accidents and serious personal injury or death. Moreover, the implement can be damaged. The technical limit values are provided in the Technical data.

- Comply with the technical limit values.

2.1.2.4.2 Personal protective equipment

CMS-T-00011154-A.1

Personal protective equipment

Wearing personal protective equipment is an important safety component. Missing or unsuitable personal protective equipment increases the risk of health impairment or personal injury. Personal protective equipment includes: work gloves, safety footwear, protective clothing, respiratory protection, hearing protection, face protection, and eye protection

- ► Determine the personal protective equipment required for each job and have it ready.
- ► Use only personal protective equipment that is in proper condition and offers effective protection.
- ► Adjust the personal protective equipment to the person, for example, adapt it to the size of the person.
- ► Comply with the manufacturer's instructions regarding operating materials, seed, fertilizer, crop protection products and cleaning agents.

Wear suitable clothing

Loosely worn clothing increases the risk of catching or entanglement on rotating parts or protruding parts. This can result in severe or fatal injuries.

- ► Wear tight-fitting clothing.
- ► Never wear rings, necklaces or other jewelry.
- ► *If you have long hair,*
  wear a hair-net.

2.1.2.4.3 Warning symbols

CMS-T-00011153-A.1

Keep warning symbols legible

Warning symbols on the implement warn of hazards in danger areas and are an important component of the implement's safety equipment. Missing warning symbols increase the risk of serious or fatal injury.

- ► Clean dirty warning symbols.
- ► Immediately replace any damaged or illegible warning symbols.
- ► Affix the intended warning symbols on spare parts.

2.1.3 Recognizing and avoiding dangers

CMS-T-00011166-A.1

2.1.3.1 Recognizing and avoiding dangers

CMS-T-00011168-A.1

Fluids under pressure

Escaping pressurized hydraulic fluid can penetrate into the body through the skin and cause serious injuries. Even a hole the size of a needle prick can result in serious injuries.

- *Before uncoupling hydraulic hose lines or check for damage,*
  depressurize the hydraulic system.
- *If you suspect that a pressure system is damaged,*
  have the pressure system checked by a qualified specialist workshop.
- Never search for leaks with your bare hand.
- Keep your body and face away from leaks.
- *If liquids penetrate into the body,*
  seek medical attention immediately.

2.1.3.2 Danger areas

CMS-T-00011167-A.1

Danger areas on the implement

The following significant hazards are present in the danger areas:

The implement and its work tools move in operation.

Hydraulically lifted implement parts can lower unnoticed and slowly.

The tractor and implement can roll unintentionally.

Materials or foreign objects can be ejected out of or away from the implement.

Failure to comply with instructions concerning the danger area can result in severe or fatal injury.

- Keep people out of the danger area of the implement.
- *If people enter the danger area,*
  immediately switch off engines and drives.
- *Before working in the danger area of the implement,*
  secure the tractor and implement. This also applies for quick inspection tasks.

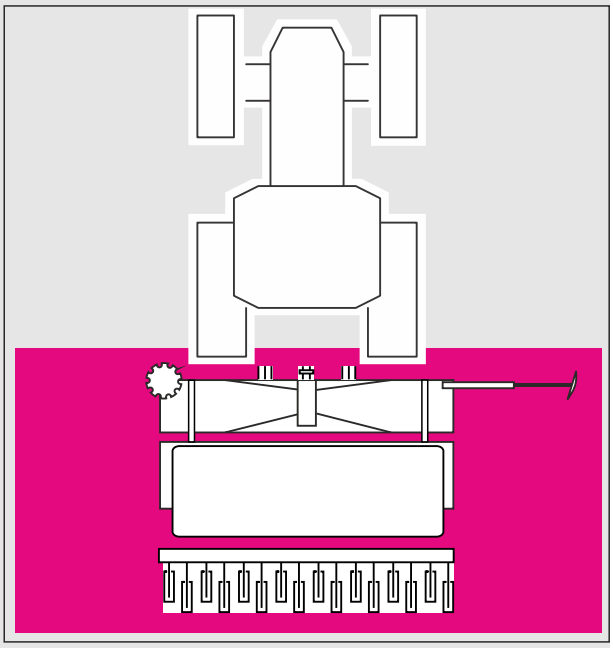

CMS-I-00007485

2.1.4 Safe operation and handling of the implement

CMS-T-00011162-A.1

2.1.4.1 Coupling the implement

CMS-T-00011163-A.1

Coupling the implement to the tractor

Incorrectly coupling the implement to the tractor results in hazards that can cause serious accidents.

There are crush points and shear points in the area of the coupling points between the tractor and the implement.

- *If you couple the implement or uncouple the implement from the tractor,*
  be very careful.
- Only couple and transport the implement with suitable tractors.
- *When the implement is coupled on the tractor,*
  ensure that the tractor's connecting device meets the implement requirements.
- Carefully couple the implement to the tractor.

2.1.4.2 Driving safety

CMS-T-00011164-A.1

Hazards when driving on roads and fields

Any implements or front/rear weights attached to the tractor influence the driving behavior and the steering and braking capacity of the tractor. Driving characteristics also depend on the operating condition, the fill level or load and on the substrate. If the driver does not take changed driving characteristics into account, he can cause accidents.

- Always ensure that the tractor has sufficient steering and braking capacity.
- *The tractor must provide the prescribed brake lag for the tractor and mounted implement.*
  Check the braking effect before moving off.
- *The tractor front axle must always be loaded with at least 20% of the empty tractor weight to ensure sufficient steering capacity.*
  If necessary, use front weights.
- Always fasten the front weights or rear weights on the prescribed fastening points provided for this purpose.
- Calculate the payload and comply with the permissible payload for the mounted or towed implement.
- Comply with the permissible axle loads and drawbar loads of the tractor.
- Comply with the permissible drawbar load of the hitch device and drawbar.
- Drive in such a manner that you always have full control of the tractor with the mounted or trailed implement. In so doing, take your personal abilities into account, as well as the road, traffic, visibility conditions and weather conditions as well as the driving characteristics of the tractor and the influence of the mounted implement.

When driving on roads, there is risk of accident due to uncontrolled lateral movements of the implement

- Lock the tractor lower links in place for road travel.

Preparing the implement for road travel

If the implement is not properly prepared for road travel, it can cause serious traffic accidents.

- Check the lighting and identification for road travel for proper function.
- Remove coarse contaminants from the implement.
- Follow the instructions in the section "Preparing the implement for road travel".

Parking the implement

The parked implement can tip over. People can be crushed and killed.

- Only park the implement on stable and level ground.
- *Before performing adjustment tasks or maintenance tasks,*
  ensure that the implement is stable. If in doubt, support the implement.
- Follow the instructions in the section *"Parking the implement"*.

Unsupervised parking

Parked tractors with coupled implements that are insufficiently secured or unsupervised pose a hazard for people and for children at play.

- *Before leaving the implement:*
  Bring the tractor and the implement to a standstill.
- Secure the tractor and the implement.

2.1.5 Safe maintenance and modification

CMS-T-00011145-A.1

2.1.5.1 Modifications on the implement

CMS-T-00011147-A.1

Only authorized modifications

Structural modifications or extensions can impair the functionality and operational safety of the implement. This can result in severe or fatal injuries.

- Have any structural modifications or extensions performed only by a qualified specialist workshop.
- *This ensures that the operating permit remains valid in accordance with national and international regulations.*
  Ensure that the specialist workshop only uses conversion parts, spare parts, and special equipment approved by AMAZONE.

2.1.5.2 Tasks on the implement

CMS-T-00011148-A.1

Only work on the implement after it has come to a complete standstill

If the implement is not at standstill, parts can move unintentionally or the implement can be set in motion. This can result in severe or fatal injuries.

- Before performing any tasks on the implement, bring the implement to a standstill and secure it.
- *To bring the implement to a standstill,*
  perform the following tasks
- If necessary, use wheel chocks to prevent the implement from rolling.
- Lower lifted loads to the ground.
- Discharge the pressure in the hydraulic hose lines.
- *If you must work on or under raised loads,*
  lower the loads or secure raised implement parts with a hydraulic device or mechanical locking device.
- Switch off all drives.
- Apply the parking brake.
- Particularly on slopes, in addition, use wheel chocks to prevent the implement from rolling.
- Remove the ignition key and keep it with you.
- Remove the key from the battery circuit breaker.
- Wait until all parts still in motion after the unit is switched off have come to a stop and until hot parts have cooled down.

Maintenance tasks

Improper maintenance tasks, particularly on safety-related components, compromise operational safety. This can result in accidents and persons can be severely injured or killed. Safety-related components include, hydraulic components, electronic components, frames, springs, trailer coupling, axles and axle suspensions, lines and tanks containing flammable substances.

- *Before adjusting, maintaining or cleaning the implement,*
  secure the implement.
- Maintain the implement as specified in this operating manual.
- Only perform the tasks that are described in this operating manual.
- Maintenance tasks that are not described in this operating manual should only be performed by a qualified specialist workshop.
- Maintenance tasks on safety-related components should only be performed by a qualified specialist workshop.
- Never perform welding, drilling, sawing, grinding, and cutting tasks on the frame, running gear or coupling devices of the implement.
- Never modify safety-related components.
- Never drill out existing holes.
- Perform all maintenance tasks at the prescribed maintenance intervals.

Raised implement parts

Raised implement parts can lower unintentionally and crush or kill people.

- Never position yourself under raised implement parts.
- *If you must perform tasks on or under raised implement parts,*
  lower the implement parts or secure the raised implement parts with a mechanical support or hydraulic locking device.

Danger due to welding tasks

Improper welding tasks, particularly on or close to safety-related components, compromise the operational safety of the implement. This can result in accidents and persons can be severely injured or killed. Safety-related components include, hydraulic components and electronic components, frames, springs, coupling devices to the tractor such as the 3-point mounting frame, drawbars, trailer support, trailer coupling, tensioned crosspiece as well as axles and axle suspensions, lines, and tanks containing flammable substances.

- Only have qualified specialist workshops with appropriately approved personnel perform welding tasks on safety-related components.
- Only have qualified personnel perform welding tasks on all other components.
- *If in doubt as to whether a component can be welded,*
  ask a qualified specialist workshop.
- *Before welding on the implement,*
  uncouple the implement from the tractor.

2.1.5.3 Operating materials

CMS-T-00011146-A.1

Unsuitable operating materials

Operating materials that do not meet the AMAZONE requirements can cause implement damage and accidents.

- Only use operating materials that meet the requirements specified in the Technical data.

2.1.5.4 Special equipment and spare parts

CMS-T-00011149-A.1

Special equipment, accessories, and spare parts

Special equipment, accessories, and spare parts that do not meet AMAZONE requirements can impair the operational reliability of the implement and cause accidents.

- Only use original parts or parts that meet the AMAZONE requirements.
- *If you have any questions regarding special equipment, accessories or spare parts,*
  contact your AMAZONE dealer or AMAZONE.

2.2 Safety routines

CMS-T-00011169-A.1

Securing the tractor and implement

If the tractor and implement are not secured against unintentional starting and rolling, the tractor and implement can be set in uncontrolled motion, and can run over, crush and kill people.

- Lower the lifted implement or lifted implement parts.
- Dissipate pressure in the hydraulic hose lines by activating the operating devices.
- *If you must stand under the raised implement or components,*
  prevent the raised implement and components from lowering with a mechanical safety support or hydraulic locking device.
- Switch off the tractor.
- Engage the tractor's parking brake.
- Remove the ignition key.

Securing the implement

After uncoupling, the implement must be secured. If the implement or implement parts are not secured, there is a risk of injury due to crushing or cutting.

- Only park the implement on stable and level ground.
- *Before depressurizing the hydraulic hose lines and disconnecting them from the tractor,*
  bring the implement into working position.
- Protect people from direct contact with sharp-edged or protruding implement parts.

Keep protective devices functional

If protective devices are missing, damaged or faulty or have been removed, implement parts can severely injure or kill people.

- Check the implement at least once a day for damage, proper installation, and functionality of the protective devices.
- *If there is doubt as to whether the protective devices are properly installed and functional,*
  have the protective devices checked by a qualified specialist workshop.
- Ensure that the protective devices are properly installed and functional before any activity on the implement.
- Replace damaged protective devices.

Climbing on and off

Negligent behavior while climbing on and off may cause personnel to fall off the ladder. Personnel who climb onto the implement without using the intended access aids can slip or fall, and suffer severe injury.

- Use only the intended access aids
- *Dirt as well as operating materials can impair stepping safety and stability.*
  Always keep stepping surfaces and platforms clean and in proper condition, so that safe stepping and standing is ensured.
- Never climb onto the implement when it is in motion.
- Climb up and down facing the implement.
- When climbing up and down, maintain 3-point contact with the access steps and handrails: always keep two hands and one foot or two feet and one hand on the implement.
- When climbing up and down, never use the control elements as a hand grip. Accidental activation of control elements can unintentionally trigger potentially dangerous functions.
- When climbing down, never jump off of the implement.

Intended use

3

CMS-T-00007168-B.1

- The implement is designed exclusively for professional use, for the precise spreading of seed in accordance with Good Agricultural Practices.
- The implement is an agricultural work machine for mounting on a carrying implement. The carrying implement has a special interface that meets the technical requirements.
- Depending on the provisions of the applicable road traffic regulations, when driving on public roads, the implement can only be mounted with the carrying implement, and transported on the rear of a tractor that meets the technical requirements.
- The implement may only be used and maintained by persons who meet the requirements. The requirements imposed on personnel are described in the section *"Qualifications of personnel"*.
- The operating manual is part of the implement. The implement is intended exclusively for use in compliance with this operating manual. Uses of the implement that are not described in this operating manual can result in serious personal injury or even death and implement damage and material damage.
- The users and the owner must also comply with the applicable accident prevention regulations as well as generally accepted safety-related, occupational health and road traffic regulations.
- Additional instructions concerning intended use for special cases can be requested from AMAZONE.
- Uses other than those specified under the intended use are considered non-intended use. The manufacturer is not liable for any damage resulting from non-intended use; the owner is exclusively liable for such damage.

Product description

4

CMS-T-00012475-A.1

4.1 Implement overview

CMS-T-00007914-A.1

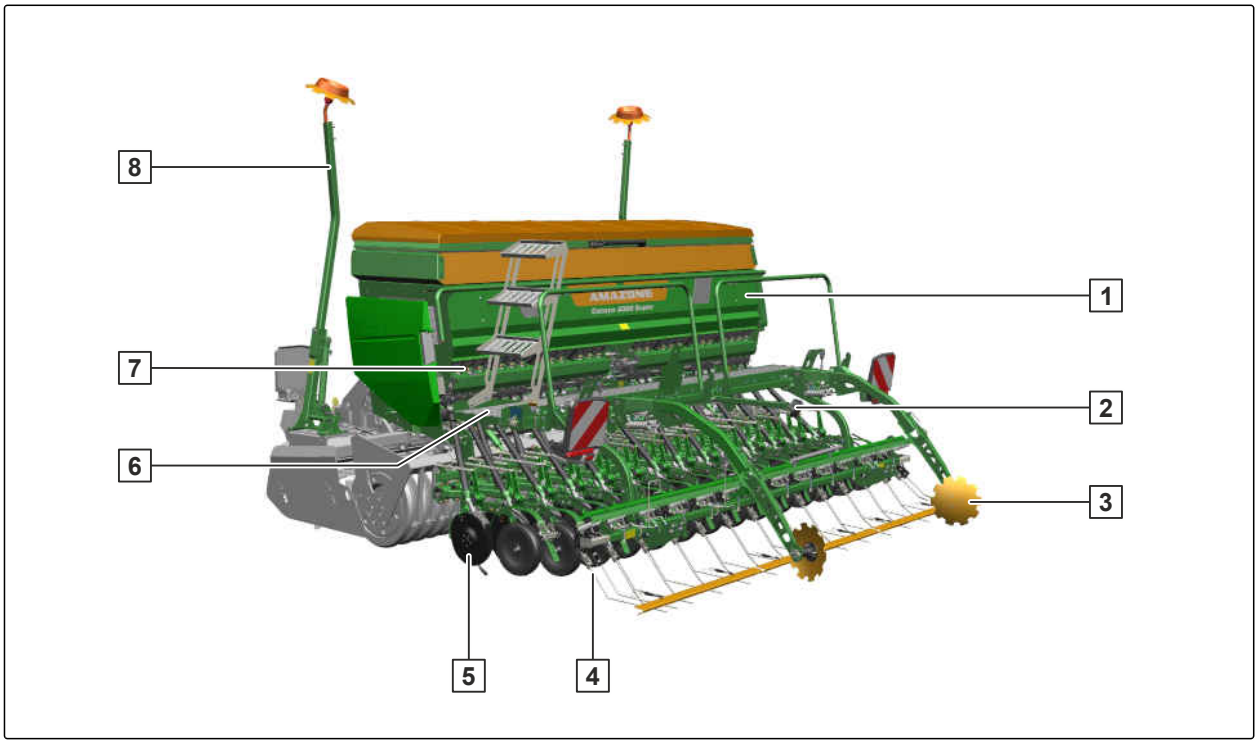

CMS-I-00005518

1	Hopper	2	Radar sensor
3	Tramline marker	4	Roller harrow, or exact following harrow
5	TwinTeC double-disk coulters, or RoTec single-disk coulters	6	Loading board
7	Metering unit	8	Track marker

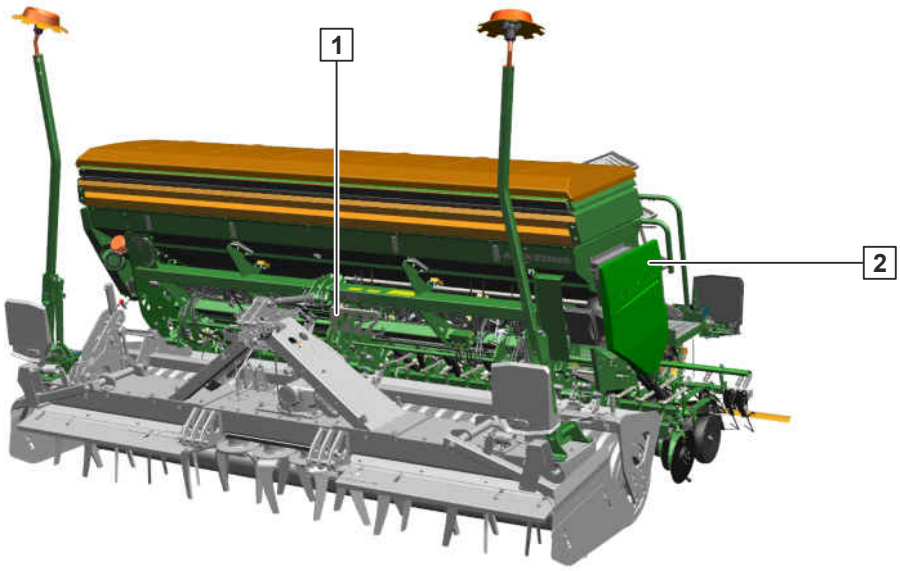

CMS-I-00005519

1 Cabinet for supply lines

2 SmartCenter

4.2 Function of the implement

CMS-T-00007918-A.1

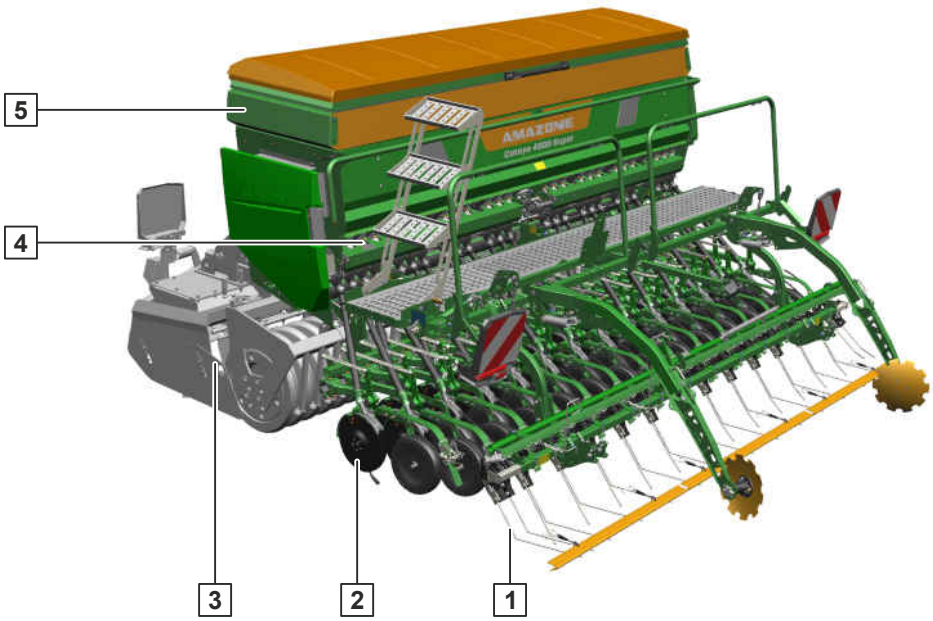

CMS-I-00005498

The implement can only be used together with a suitable soil tillage implement 3. The combination enables seedbed preparation and seeding in one field pass.

The metered material is carried in the hopper 5 and is metered by the metering wheels in the seed housings 4. The seeding coulter 2 forms a seed furrow and deposits the metered material in the seedbed. The harrow 1 covers the seed with soil.

4.3 Special equipment

CMS-T-00007924-A.1

Special equipment is equipment that may possibly not be on your implement or that may only be available in some markets. The sales documents specify the equipment of your implement or contact your dealer for more detailed information.

- Seed hopper extension
- Grating screen for hopper
- Seed guide elements
- Handrail on the loading board
- LED rear lighting for road travel
- License plate holder with lighting for road travel
- LED work lights, integrated
- LED work lights for coulters, integrated
- Mechanical top link (long)
- Parking supports for TwinTeC coulters
- Electric tramline control for one-sided metering drive
- Electric tramline control for both-side electric metering drive
- Tramline marker
- Control valve and hydraulic kit for tramline marker on the exact following harrow
- Control valve and hydraulic kit for tramline marker
- Connection unit for tramline marker without track marker
- Seed metering wheel for peas and beans
- Mechanical coulter pressure indicator
- Harrow set on the TwinTeC coulter
- Exact following harrow
- Mounting kit for exact following harrow

- Mounting kit for exact following harrow with hydraulic lift-out
- Connection unit, for hydraulic exact following harrow lift-out
- Rear pack top hopper, GreenDrill
- Mounting kit with distributor tube
- Adapter for mounting kit with distributor tube
- Coulter pressure sensor for seed rate adjustment
- Additional electronic low level sensor
- Comfort hydraulic system
- Comfort hydraulic system incl. MinMax coulter pressure adjustment
- Preparation loading dimension 8.04 ft (2.45 m)

4.4 Protective devices

CMS-T-00007927-A.1

4.4.1 Grating screen

CMS-T-00007928-A.1

The grating screen 1 in the hopper prevents contact with the running agitator shaft.

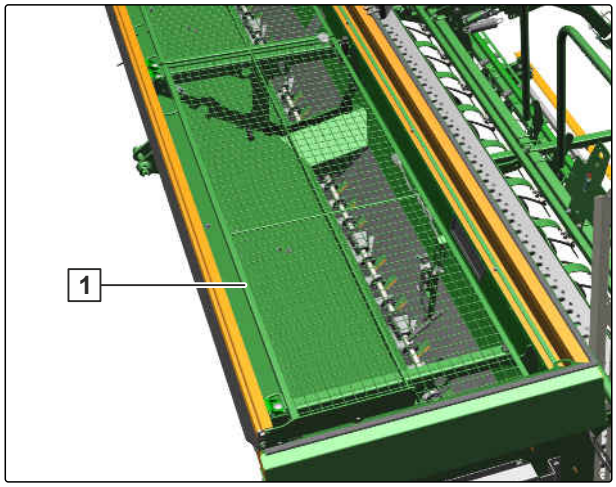

CMS-I-00005523

4.4.2 Chain drive cover

The cover 1 prevents contact with the chain drive of the agitator shaft and seeding shaft.

CMS-T-00007935-A.1

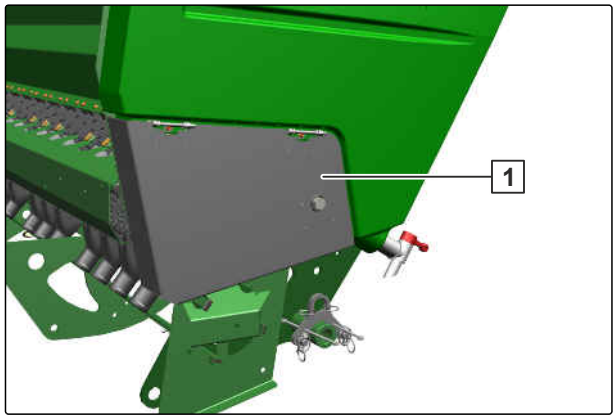

CMS-I-00005525

4.4.3 Metering unit cover

The metering unit cover 1 prevents contact with rotating shafts and gear wheels; it also protects the shafts and gear wheels from dust and dirt.

CMS-T-00007936-A.1

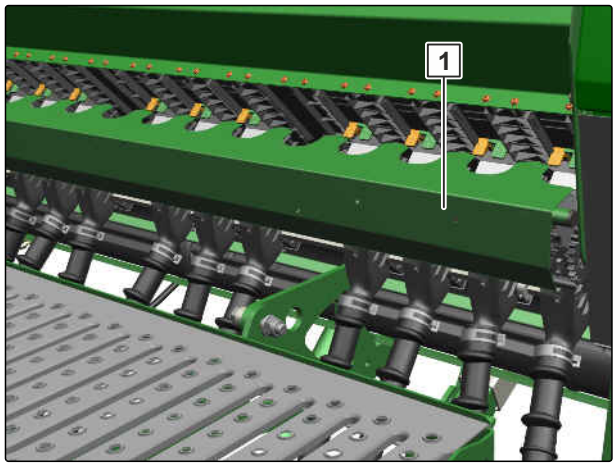

CMS-I-00005526

4.4.4 Road safety bars

The road safety bars 1 cover the tines of the exact following harrow or seed harrow during road travel to protect against injury or damage.

CMS-T-00007937-C.1

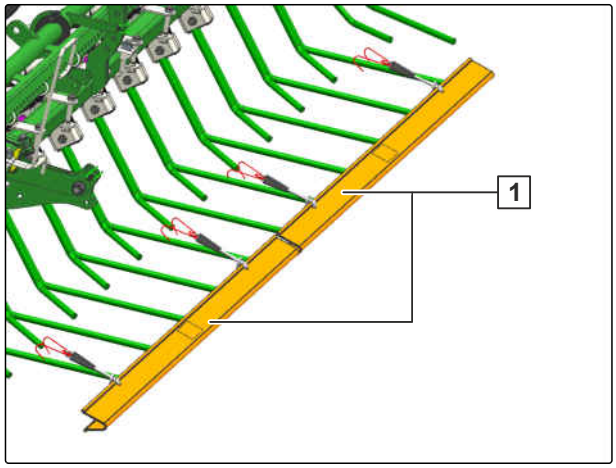

CMS-I-00005527

4.5 Warning symbols

CMS-T-00012476-A.1

4.5.1 Positions of the warning symbols

CMS-T-00012478-A.1

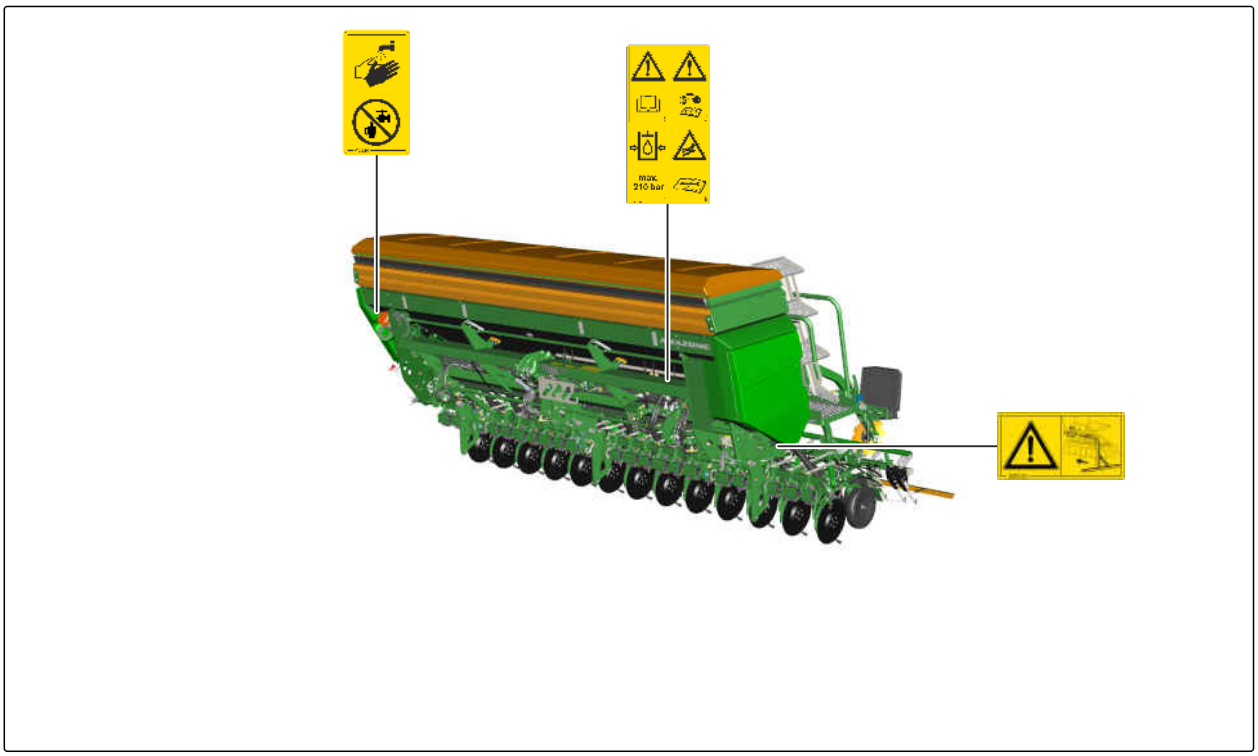

CMS-I-00005544

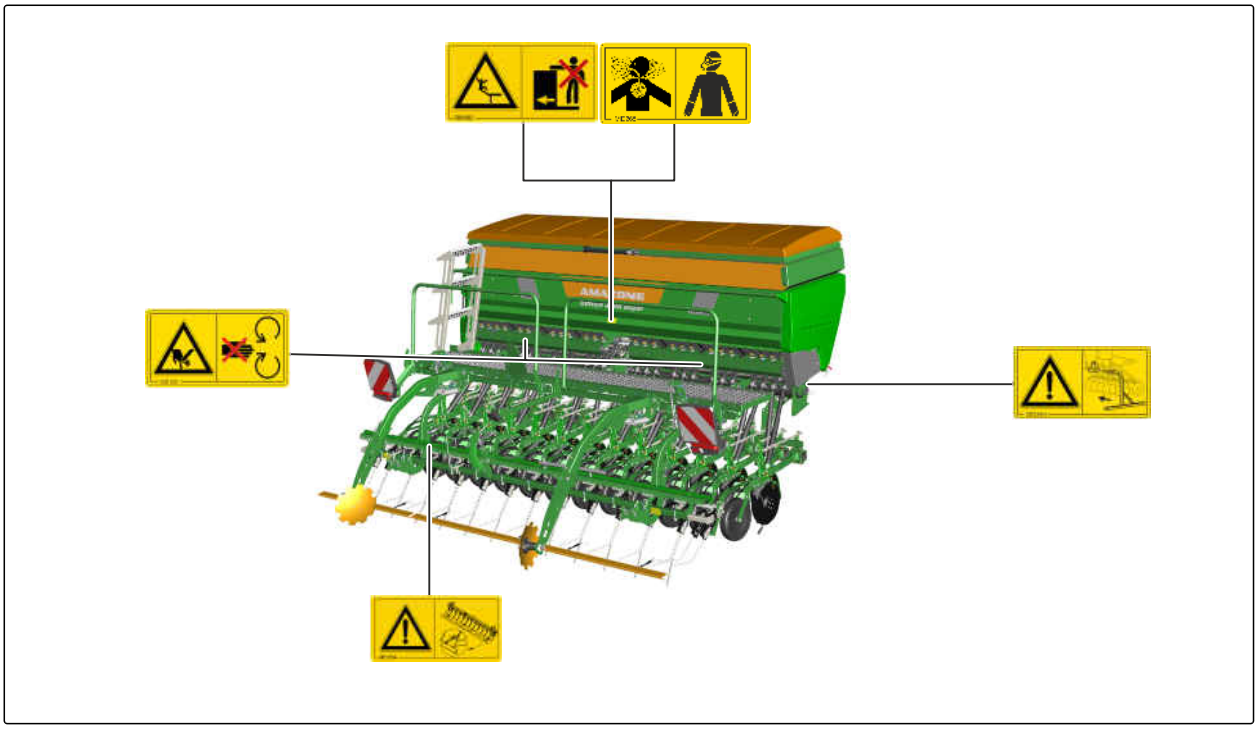

CMS-I-00005551

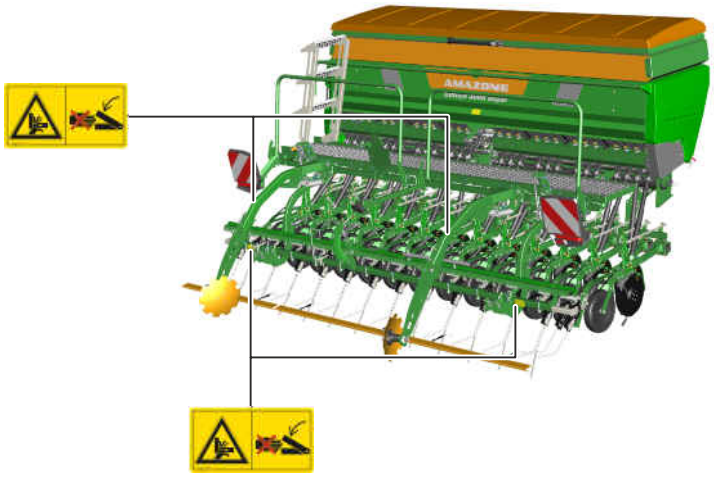

CMS-I-00005552

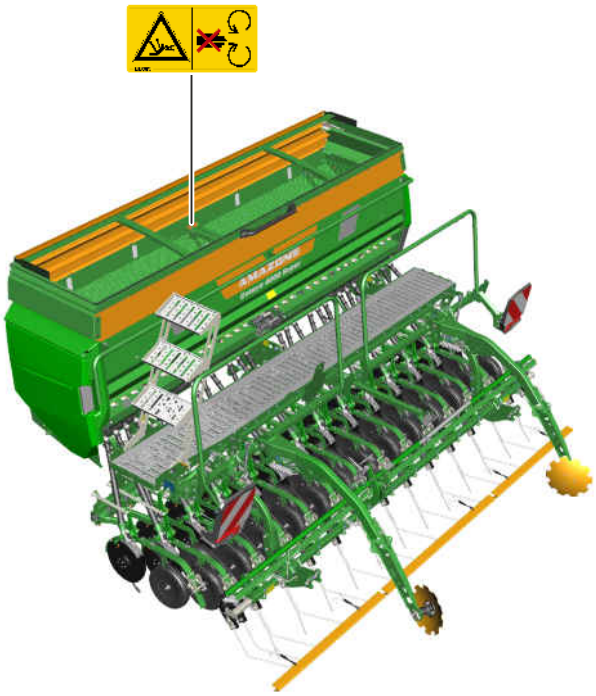

CMS-I-00005550

4.5.2 Structure of the warning symbols

CMS-T-00012479-A.1

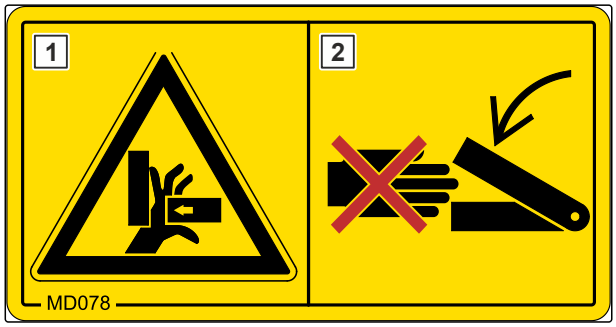

CMS-I-00000416

Warning symbols indicate danger areas on the implement and warn of residual risks. In these danger areas, there are permanent hazards or hazards that occur unexpectedly.

A warning symbol consists of 2 fields:

- Field 1 shows the following:
  - A pictogram indicating the danger area, surrounded by a triangular safety symbol
  - The order number
- field 2 shows the pictorial instruction for avoiding the hazard.

4.5.3 Description of the warning symbols

CMS-T-00012477-A.1

MD078

Risk of crushing fingers or hands

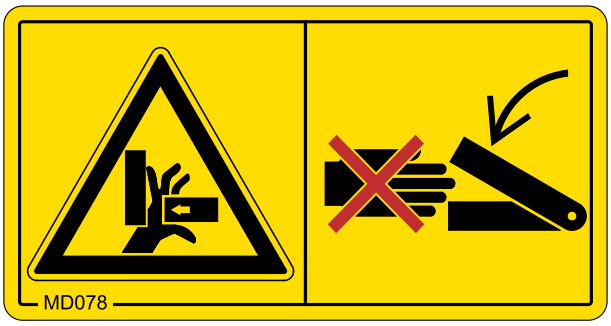

CMS-I-000074

- ▶ *As long as the engine of the tractor or implement is running,*
  stay away from the danger area.
- ▶ *If you must move marked parts with your hands,*
  pay attention to the crush points.
- ▶ Ensure that no one is in the danger area.

MD082

Risk of falling from stepping surfaces and platforms

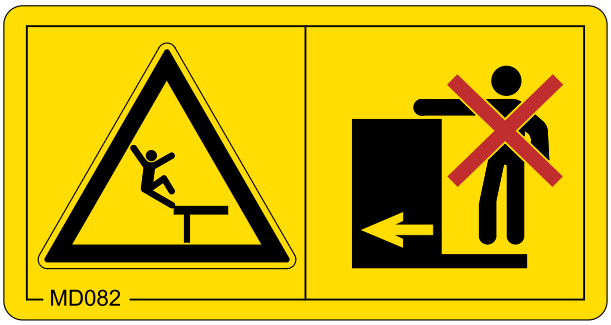

CMS-I-000081

- ▶ Never allow people to ride on the implement.
- ▶ Never allow people to climb onto the moving implement.

MD095

Risk of accident due to failure to comply with the instructions in the operating manual

- Before working on or with the implement, read and understand the operating manual.

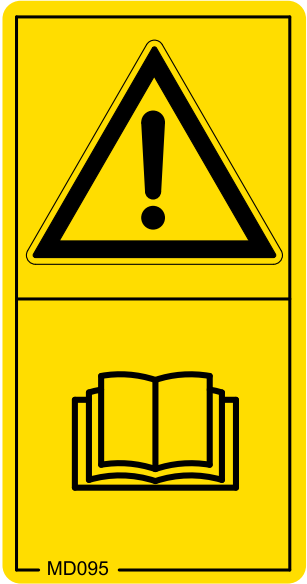

CMS-I-000138

MD096

Risk of infection due to hydraulic oil escaping at high pressure

- Never search for leaks in hydraulic hose lines using your hand or fingers.
- Never attempt to seal leaks in hydraulic hose lines using your hand or fingers.
- *If you are injured by hydraulic oil,* seek medical attention immediately.

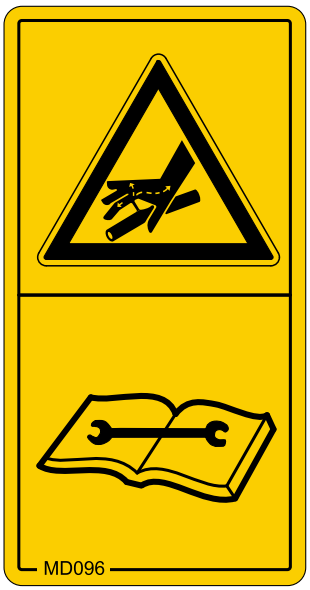

CMS-I-000216

MD102

Danger due to unintentional starting and rolling of the implement

- Before all tasks, prevent the implement from starting or rolling unintentionally.

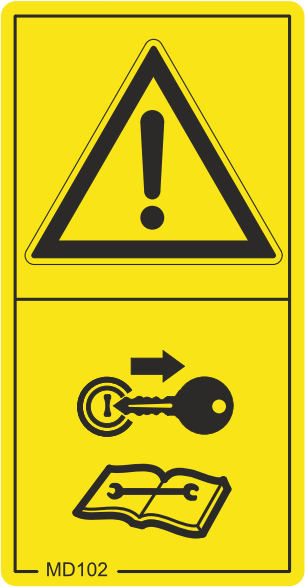

CMS-I-00002253

MD199

Risk of accident due to excessive hydraulic system pressure

- Only couple the implement to tractors with a maximum tractor hydraulic pressure of 3,045.79 psi (210 bar).

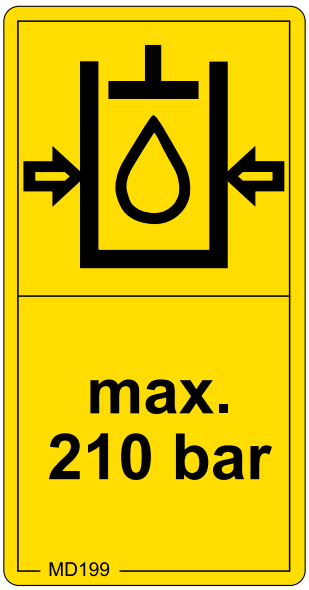

CMS-I-00000486

MD154

Risk of severe or fatal injury due to seeding harrow tines without safeguard

- *Before driving on public roads,* attach the road safety bar as described in the operating manual.

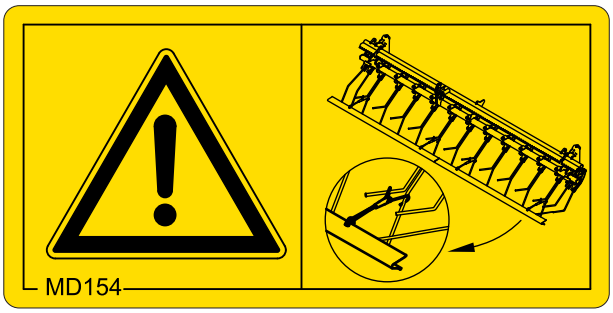

CMS-I-00003657

MD265

Risk of chemical burns due to dressing dust

- Do not inhale this harmful substance.
- Avoid skin contact and eye contact.
- Before working with hazardous materials, put on the protective clothing recommended by the manufacturer.
- Follow the manufacturer's safety instructions for handling harmful substances.

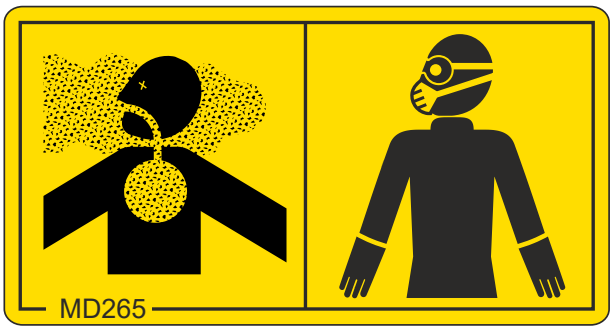

CMS-I-00003659

MD224

Health hazard due to water from the hand wash tank

- Never use the water from the hand-wash tank as drinking water.

CMS-I-00005073

MD083

Risk of entanglement and catching

- Ensure that the energy supply to the implement is disconnected before removing the protective devices.
- Wait until moving parts have come to a standstill before reaching into the danger area.
- Ensure that no one is standing in the danger area or in the vicinity of moving parts.

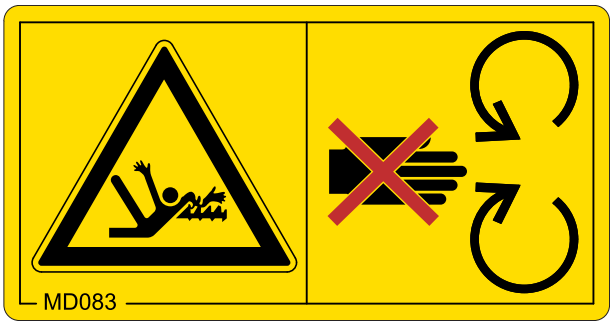

CMS-I-00003694

MD243

Risk of crushing due to the implement tipping over

- Empty the seed hopper.
- *Before parking the empty pack top seed drill,* mount the parking supports.

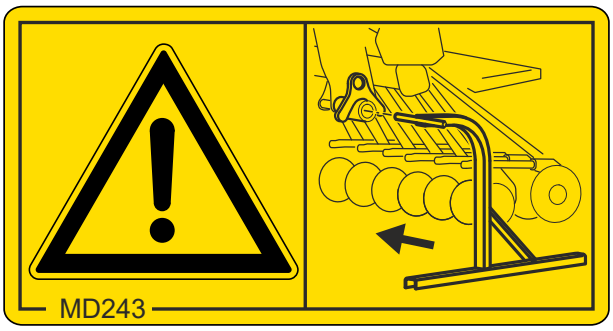

CMS-I-00005539

MD150

Risk of cutting injuries for fingers, hands, and arms

- Interrupt the power supply to the implement before approaching the danger zone.
- Wait until all moving parts have come to a standstill before removing the protective devices and reaching into the danger area.
- Ensure that no one is standing in the danger area or in the vicinity of moving parts.

CMS-I-00005538

4.6 Rating plate on the implement

CMS-T-00004505-G.1

1 Implement number

2 Vehicle ID number

3 Product

4 Permissible technical implement weight

5 Model year

6 Year of manufacture

CMS-I-00004294

4.7 GewindePack

CMS-T-00001776-E.1

The GewindePack contains the following:

- Documents
- Auxiliary equipment

CMS-I-00002306

4.8 Hand wash tank

CMS-T-00007948-A.1

The hand wash tank has a water tap 1 and a soap dispenser 2.

The hand wash tank has a capacity of 1.32 gal (5 l) and it has a screw cap 3.

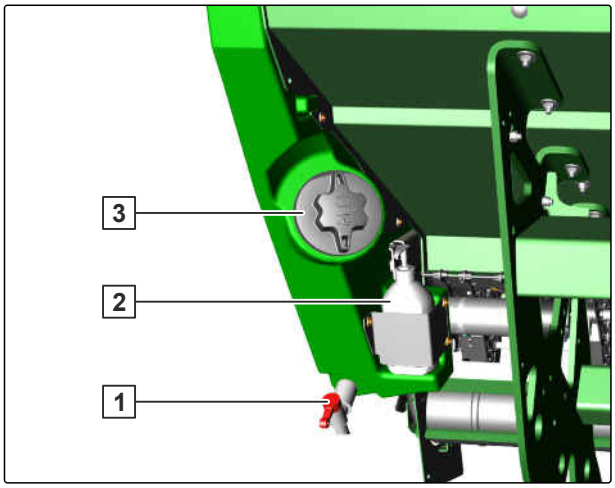

CMS-I-00005533

4.9 Metering system

CMS-T-00008573-A.1

The seed goes into the metering housing 1 through adjustable openings.

Each metering housing has 2 openings. The openings are adjusted with the coarse metering wheel sliding shutter 4 and the fine metering wheel sliding shutter 3.

The seed is metered by the coarse metering wheel 5 or the fine metering wheel 2.

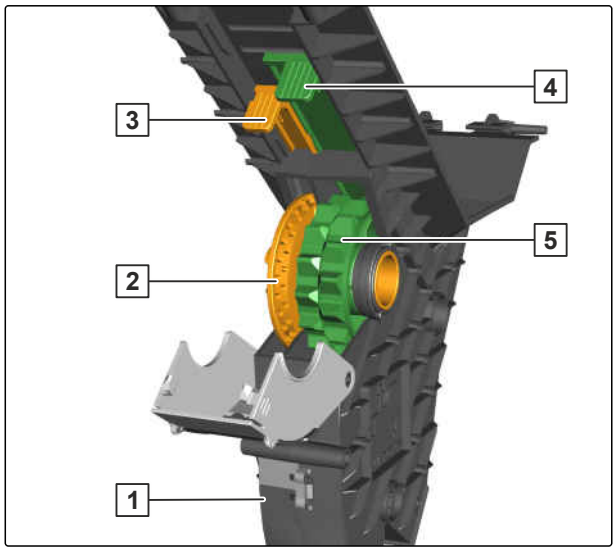

CMS-I-00005829

4.10 Universal operating tool

CMS-T-00001735-C.1

Use the universal operating tool to perform adjustment tasks on the implement 1. The universal operating tool is parked in a holder on the implement frame.

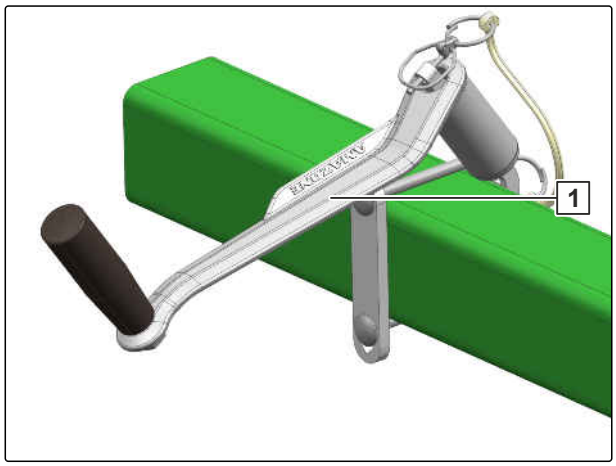

CMS-I-00001082

4.11 Camera system

CMS-T-00008580-B.1

The camera 1 at the rear of the pack top seed drill increases safety when maneuvering.

The monitor can display several camera images simultaneously.

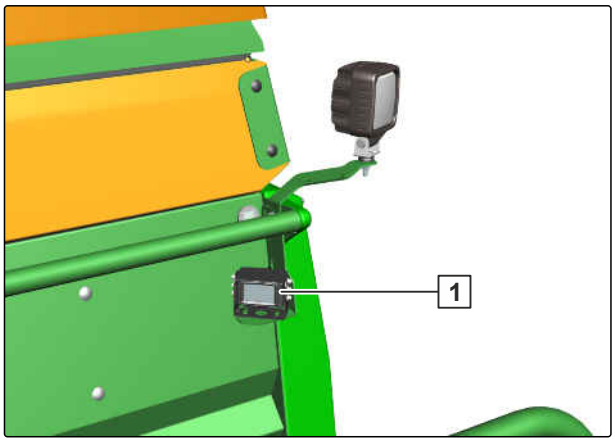

CMS-I-00005836

4.12 Radar sensor

CMS-T-00001778-C.1

For electric drives, the radar sensor detects the working speed. The working speed is used to determine the worked area and the rotational speed required for the metering drives.

CMS-I-00002221

4.13 Lighting

CMS-T-00008300-A.1

4.13.1 Rear lighting and identification for road travel

CMS-T-00001498-F.1

1 Warning signs

2 Reflector, red

3 Rear lights; brake lights; turn indicators

4 Reflector, yellow

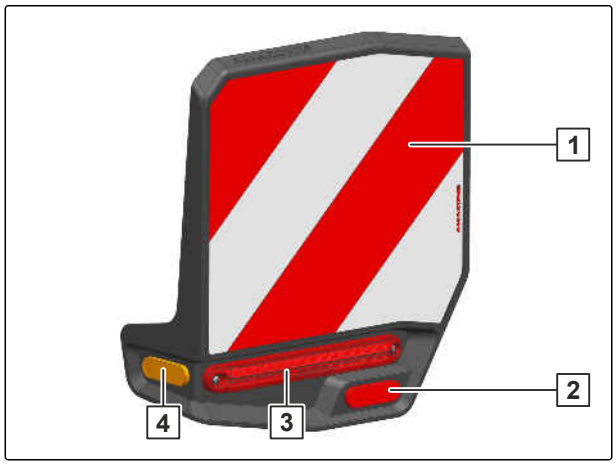

CMS-I-00004545

NOTE

The lighting and identification for road travel may vary depending on the national regulations.

4.13.2 Work lights

CMS-T-00008301-A.1

The work floodlights 1 illuminate the work area for a better view. The work floodlights are switched via the control terminal or the control computer.

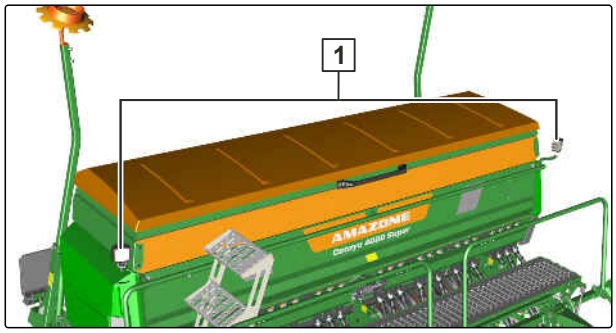

CMS-I-00005665

The coulter array lighting 1 enables better visibility of the seeding coulters in the dark. The coulter array lighting is switched together with the work floodlights via the control terminal or control computer.

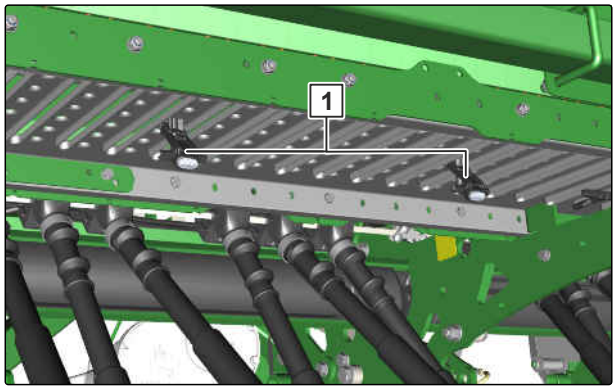

CMS-I-00005664

4.14 Mounting frame

CMS-T-00004881-C.1

The pack top seed drill is fastened on the soil tillage implement 2 with 2 receptacles 1.

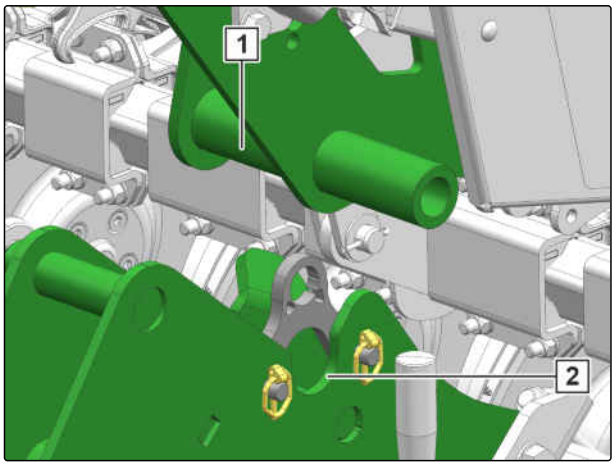

CMS-I-00003592

In addition, the pack top seed drill is connected to the soil tillage implement 1 with a top link 2.

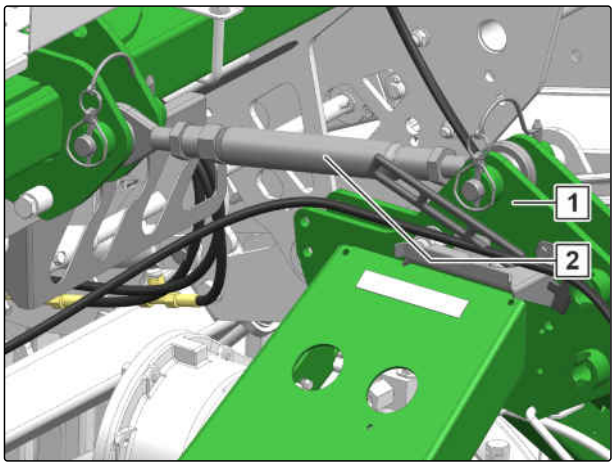

CMS-I-00004568

4.15 RoTeC coulter

CMS-T-00006297-B.1

The RoTeC coulter is a single-disk coulter and it deposits the metered material on plowed or mulched soil. The furrow former 2 and the cutting disks 3 shape the seed furrow, which the metered material is dropped into. The depth control disks and depth control wheel 1 limit the placement depth and clean the cutting disks. Coulter pressure and placement depth can be adjusted.

For soil tillage without seeding, the coulters can be lifted-out.

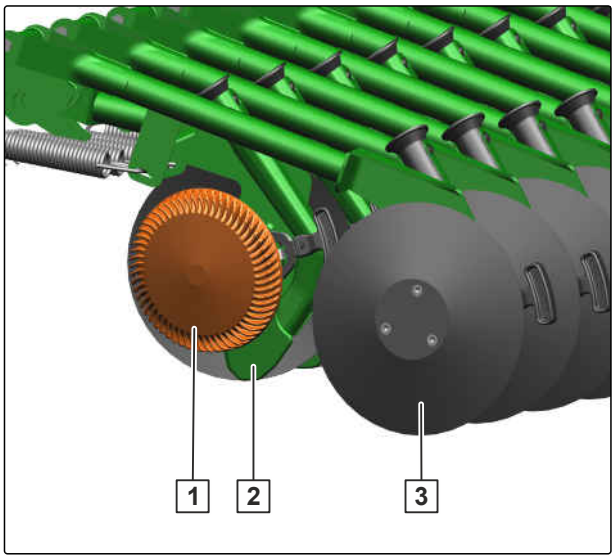

CMS-I-00004578

The Control 25 depth control wheel 1 has a 0.98 in (25 mm) wide contact area and enables shallow seeding with increased coulter pressure on light soils.

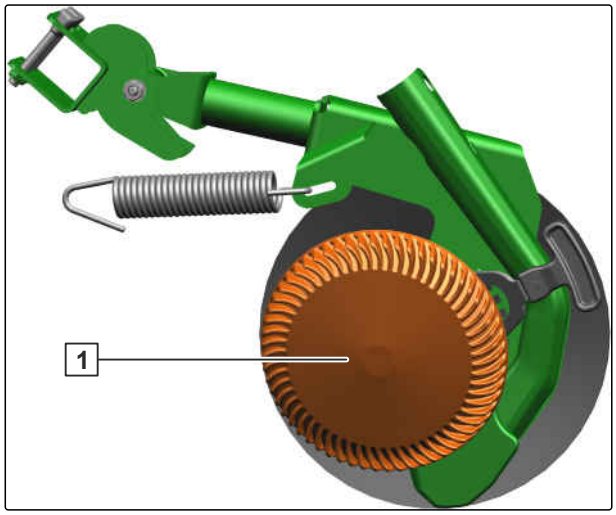

CMS-I-00004586

The Control 10 depth control disk 1 has a 0.39 in (10 mm) wide contact area and is used on heavy soils.

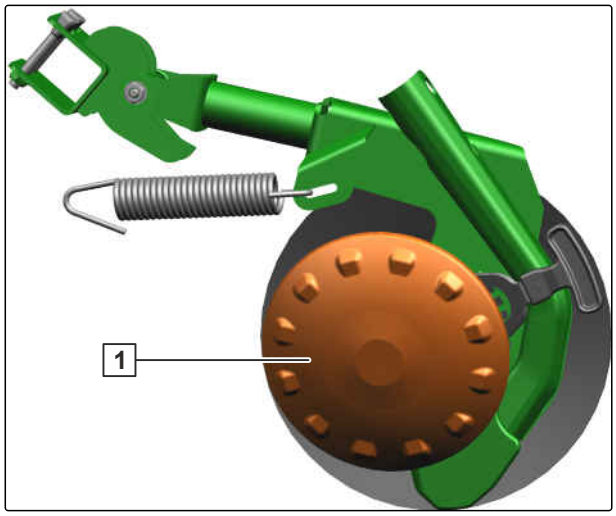

CMS-I-00004585

4.16 TwinTec coulter

CMS-T-00004346-C.1

The TwinTeC coulter is a double disk coulter for plowed or mulched soils. The concave disks 2 form the seed furrow. The metered material is guided between the concave disks and drops into the seed furrow. The depth control wheel 1 guides the double disk coulter at the set placement depth and ensures soil closure over the metered material. Coulter pressure and placement depth can be adjusted.

For soil tillage without seeding, the coulters can be lifted.

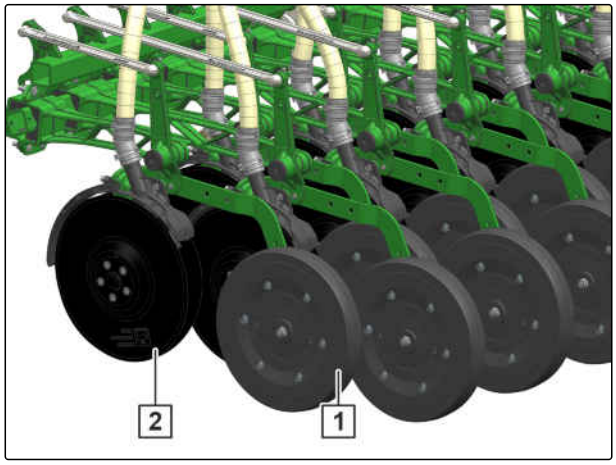

CMS-I-00003166

4.17 Exact following harrow

CMS-T-00006330-C.1

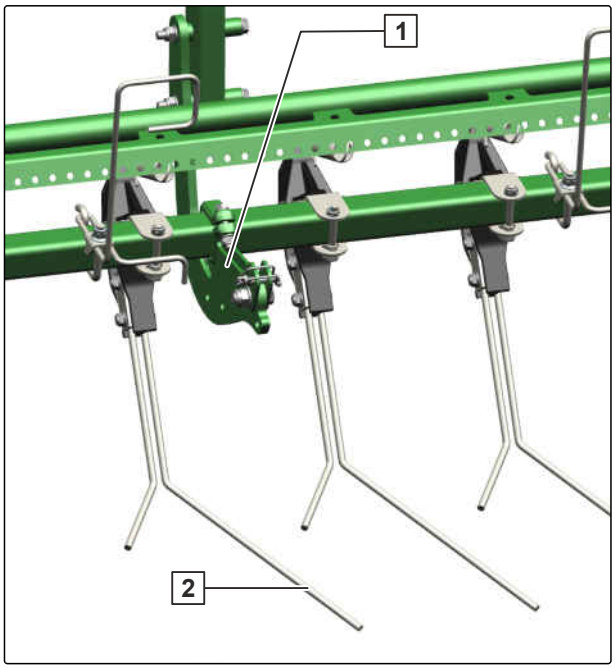

CMS-I-00004589

The harrow tines 2 of the exact following harrow rest horizontally on the ground and cover the deposited metered material uniformly with loose soil.

The position of the harrow tines can be adjusted.

The exact following harrow pressure determines the tillage intensity of the exact following harrow. The pressure can be adjusted mechanically or hydraulically. With hydraulic adjustment, the exact following harrow pressure is adjusted together with the coulter pressure.

For seed drills with exact following harrow lift-out, the exact following harrow can be lifted out independently of the position of the coulters.

There is a bracket 1, secured with a linch pin, on each side of the exact following harrow. The bracket prevents the harrow tines from folding over and getting into the coulter when driving in reverse.

If a slight collision occurs when driving in reverse, the harrow tines give way to the obstacle, without being damaged. When driving forward, the exact following harrow tines return to working position.

4.18 Coulter harrow

CMS-T-00006648-C.1

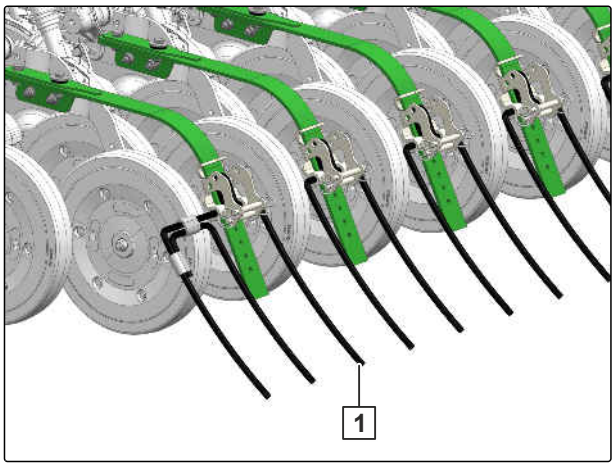

CMS-I-00004734

The harrow tines 1 of the coulter harrow uniformly cover the deposited metered material with loose soil.

The pitch and the height of the harrow tines can be adjusted.

4.19 Roller harrow

CMS-T-00007215-A.1

The harrow tines 2 close the seed furrows.

The press rollers 1 press the seed into the bottom of the furrow.

Use the adjuster segment 3 to set the pitch and the working depth of the harrow tines.

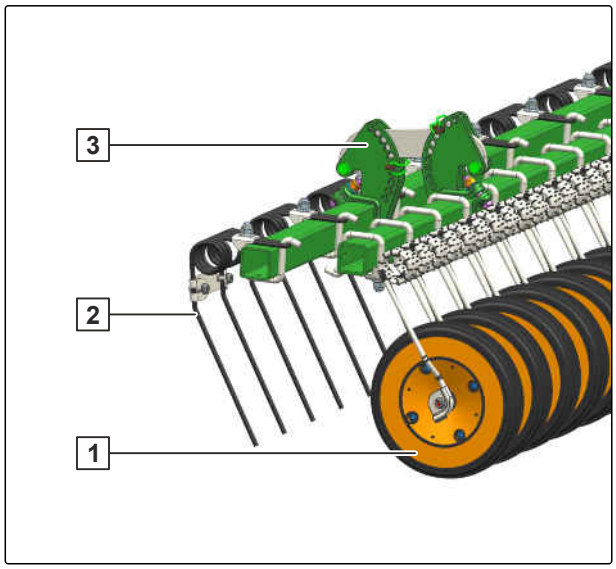

CMS-I-00005090

4.20 Tramline marker

CMS-T-00004347-C.1

When creating tramlines, the tramline marker automatically lowers the disks 1 and makes tracks. These tracks make the tramlines visible before the seed has germinated. If no tramline is created, the disks are lifted.

Depending on the implement equipment, a different number of disks can be installed on the implement. The track width and the pitch of the track disks can be adjusted.

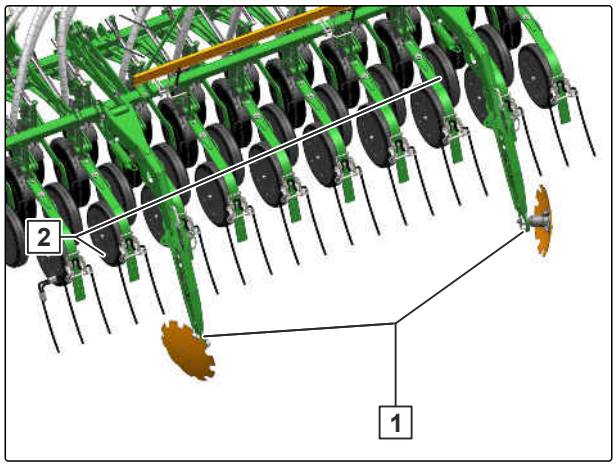

CMS-I-00003167

4.21 Track markers

CMS-T-00007957-A.1

The track markers 1 engage in the soil alternately on the left and the right of the implement.

The next bout is produced automatically when the tractor driver passes over the center of the generated track.

Length and scope of action of the track marker can be adjusted.

When the track markers pass an obstacle or when the tractor turns, the track markers must be lifted.

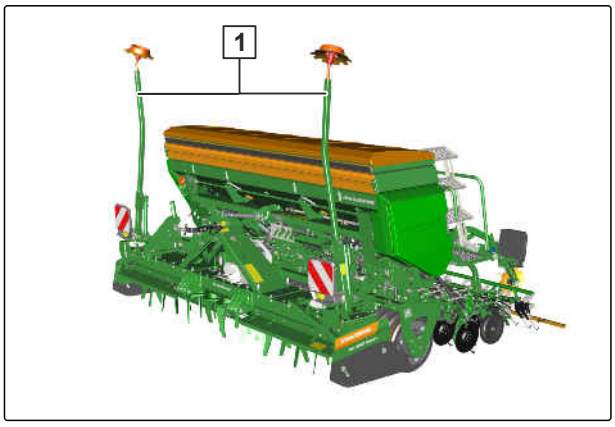

CMS-I-00005540

4.22 GreenDrill

CMS-T-00005046-B.1

The GreenDrill pack top seed drill enables seeding of fine seed and catch crops while tilling the soil or seeding of nurse crops while sowing.

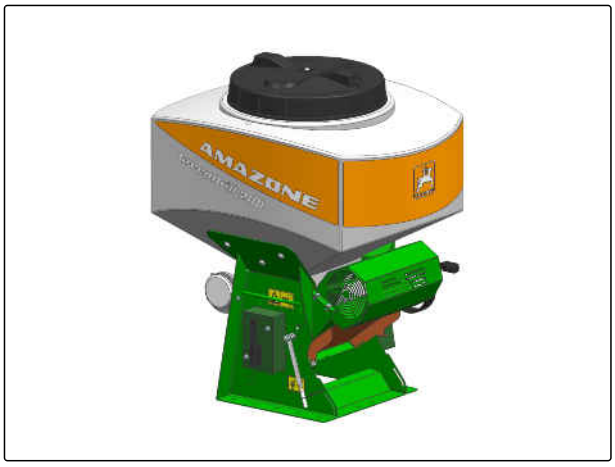

CMS-I-00003609

Technical data

5

CMS-T-00007981-A.1

5.1 Hopper volume

CMS-T-00007982-A.1

Implement version	Hopper volume
Cataya 3000 Super (without extension)	219.26 gal (830 l)
Cataya 3000 Super (with extension)	335.5 gal (1,270 l)
Cataya 4000 Super (without extension)	311.72 gal (1,180 l)
Cataya 4000 Super (with extension)	457.02 gal (1,730 l)

5.2 Dimensions

CMS-T-00007983-A.1

Dimensions	Cataya 3000 Super	Cataya 4000 Super
Transport width	9.84 ft (3 m)	13.12 ft (4 m)
Working width	9.84 ft (3 m)	13.12 ft (4 m)

5.3 QuickLink quick-coupling system

CMS-T-00003190-D.1

Working width of the implement	Distance of the QuickLink catching sockets
8.2 ft (2.5 m)	60.2 in (1,529 mm) ± 0.12 in (3 mm)
9.84 ft (3 m)	79.88 in (2,029 mm) ± 0.12 in (3 mm)
11.48 ft (3.5 m)	99.57 in (2,529 mm) ± 0.12 in (3 mm)
13.12 ft (4 m)	119.25 in (3,029 mm) ± 0.12 in (3 mm)

5.4 Optimal working speed

CMS-T-00007377-B.1

Seeding coulter	Working speed (dependent on the soil tillage implement)
TwinTec coulter	4.97 mph (8 km/h) to 7.46 mph (12 km/h)
RoTeC coulter	3.73 mph (6 km/h) to 7.46 mph (12 km/h)

5.5 Soil tillage tools

CMS-T-00007984-A.1

Dimensions	Cataya Super with RoTeC coulters			
	3000		4000	
Number of rows	24	20	32	26
Row spacing	4.92 in (12.5 cm)	5.91 in (15 cm)	4.92 in (12.5 cm)	6.06 in (15.4 cm)

Dimensions	Cataya Super with TwinTeC coulters			
	3000		4000	
Number of rows	24	20	32	26
Row spacing [cm]	12.5	15	12.5	15.4

5.6 Permissible mounting categories

CMS-T-00007987-A.1

Type	Mounting frame of the seed drill	3-point mounting frame of the carrying implement
Cataya Super 3000 / 4000	QuickLink	Category 3

5.7 Noise emission data

CMS-T-00007989-A.1

The workplace-related emission sound pressure level is lower than 73 dB(A), measured in operating status at the ear of the tractor driver with the cab closed.

The emission sound pressure level primarily depends on the vehicle used.

5.8 Drivable slope inclination

CMS-T-00004990-A.1

Across the slope		
In direction of travel left	10%	
In direction of travel right	10%	

Uphill and downhill		
Uphill	10%	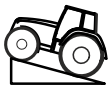
Downhill	10%	

5.9 Capacity characteristics of the tractor

CMS-T-00007988-A.1

Type	Engine capacity
Cataya 3000 Super	From 95 kW / 130 hp (130 PS)
Cataya 4000 Super	From 132 kW / 180 hp (180 PS)

Electrical system	
Battery voltage	12 V
Lighting socket	7-pin

Hydraulics	
Maximum operating pressure	3,045.79 psi (210 bar)
Tractor pump capacity	At least 2.64 gpm (10 l/min) at 2,175.57 psi (150 bar)
Implement hydraulic oil	HLP68 DIN 51524 The hydraulic oil is suitable for the combined hydraulic oil circuits of all standard tractor manufacturers.
Control units	Depending on the implement equipment

Preparing the implement

6

CMS-T-00007991-A.1

6.1 Calculating the required tractor characteristics

CMS-T-00000063-F.1

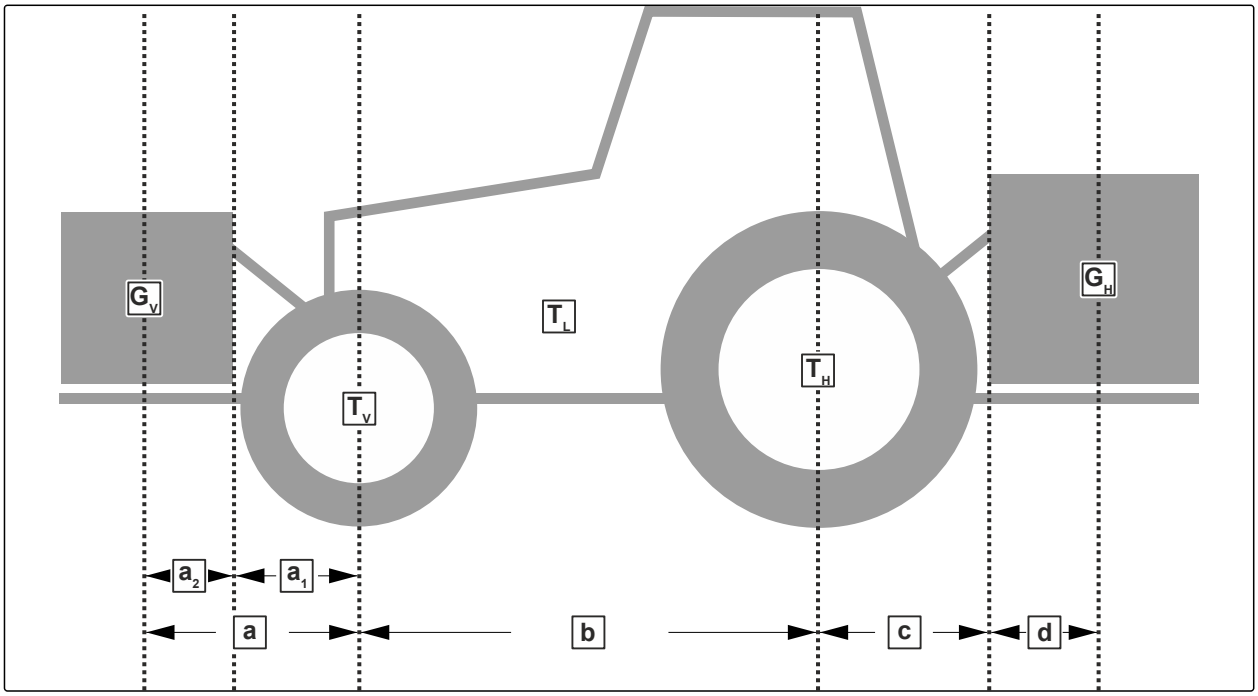

CMS-I-00000581

Designation	Unit	Description	Determined values
T_L	lb (kg)	Tractor tare weight	
T_V	lb (kg)	Front axle load of the operational tractor without mounted implement or weights	
T_H	lb (kg)	Rear axle load of the operational tractor without mounted implement or weights	
G_V	lb (kg)	Total weight of front-mounted implement or front weight	
G_H	lb (kg)	Permissible total weight of rear-mounted implement or rear ballast	
a	ft (m)	Distance between the center of gravity of the front-mounted implement or the front ballast and the center of the front axle	

Designation	Unit	Description	Determined values
a_1	ft (m)	Distance between center of the front axle and center of the lower link connection	
a_2	ft (m)	Center of gravity distance: Distance between the center of gravity of the front-mounted implement or the front ballast and the center of the lower link connection	
b	ft (m)	Wheelbase	
c	ft (m)	Distance between the center of the rear axle and the center of the lower link connection	
d	ft (m)	Center of gravity distance: Distance between the center of the lower link coupling point and center of gravity of the rear-mounted implement or rear ballast.	

1. Calculate the minimum front ballast.

$$G_{Vmin} = \frac{G_H \cdot (c + d) - T_V \cdot b + 0{,}2 \cdot T_L \cdot b}{a + b}$$

$G_{Vmin} =$ _____

$G_{Vmin} =$

CMS-I-00000513

2. Calculate the actual front axle load.

$$T_{Vtat} = \frac{G_V \cdot (a + b) + T_V \cdot b - G_H \cdot (c + d)}{b}$$

$T_{Vtat} =$ _____

$T_{Vtat} =$

CMS-I-00000516

3. Calculate the actual total weight of the tractor-implement combination.

$$G_{tat} = G_V + T_L + G_H$$

$$G_{tat} =$$

$$G_{tat} =$$

CMS-I-00000515

4. Calculate the actual rear axle load.

$$T_{Htat} = G_{tat} - T_{Vtat}$$

$$T_{Htat} =$$

$$T_{Htat} =$$

CMS-I-00000514

5. Determine the tire load capacity for two tractor tires in the manufacturer specifications.

6. Note the determined values in the table below.

IMPORTANT

Risk of accident due to implement damage caused by excessive loads

- Ensure that the calculated loads are less than or equal to the permissible loads.

	Actual value according to calculation			Permissible value according to tractor operating manual			Tire load capacity for two tractor tires	
Minimum front ballast		lb (kg)	≤		lb (kg)		-	-
Total weight		lb (kg)	≤		lb (kg)		-	-
Front axle load		lb (kg)	≤		lb (kg)	≤		lb (kg)
Rear axle load		lb (kg)	≤		lb (kg)	≤		lb (kg)

6.2 Coupling the implement

CMS-T-00007992-A.1

6.2.1 Coupling the ISOBUS or control computer

CMS-T-00003611-F.1

1. Plug in the plug connector of the ISOBUS line **1** or the control computer line **2**.

2. Route the ISOBUS cable with sufficient freedom of movement and without chafing or pinching points.

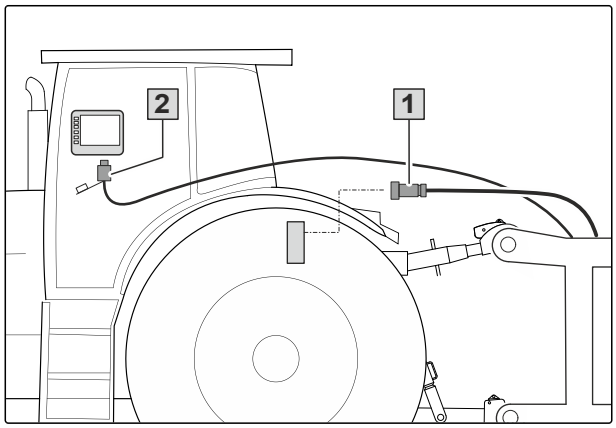

CMS-I-00006891

6.2.2 Coupling hydraulic hose lines

CMS-T-00008070-A.1

All hydraulic hoses are fitted with handles. The handles have colored markings with code number or a code letter. The markings are assigned to the respective hydraulic functions of the pressure line of a tractor control unit. Stickers that match the marking are affixed on the implement to illustrate the respective hydraulic functions.

The tractor control unit is used in different activation types, depending on the hydraulic function:

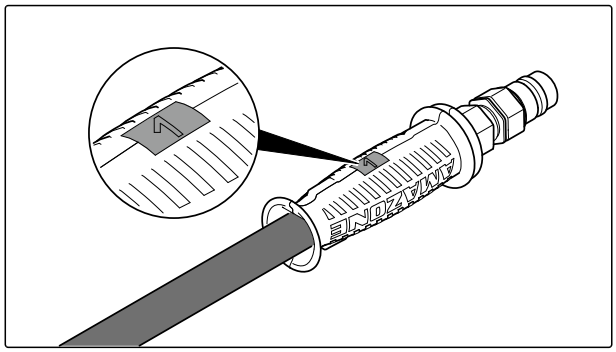

CMS-I-00000121

Activation type	Function	Symbol
Latching	Permanent oil circulation	
Momentary	Oil circulation until action is executed	
Floating	Free oil flow in the tractor control unit	

Marking		Function			Tractor control unit	
Green	1		Coulter pressure Seed rate increase Exact following harrow pressure Coulter lift-out	Increase	Double-acting	
	2			Reduce		
Yellow Not required in conjunction with track markers.	1		Tramline marker	Lifting	Single-acting	
Blue	1		Exact following harrow lift-out	Lowering	Double-acting	
	2			Lifting		
Red	T	Pressure relief through pressureless return flow.				

WARNING

Risk of injury or even death

If the hydraulic hose lines are incorrectly connected, the hydraulic functions may be faulty.

- When coupling the hydraulic hose lines, pay attention to the colored markings on the hydraulic plug connectors.

IMPORTANT

Implement damage due to insufficient hydraulic oil return flow

- Only use DN16 lines for the pressureless hydraulic oil return flow.
- Select short return paths.
- Connect the pressureless hydraulic return flow correctly.
- Mount the supplied coupling sleeve on the pressureless hydraulic oil return.

1. Depressurize the hydraulic system between the tractor and the implement using the tractor control unit.

2. Clean the hydraulic plug connectors.

3. Couple the hydraulic hose lines 1 to the hydraulic sockets of the tractor according to the marking 2.

➡ The hydraulic plug connectors lock tangibly.

4. Route the hydraulic hose lines with sufficient freedom of movement and without chafing points.

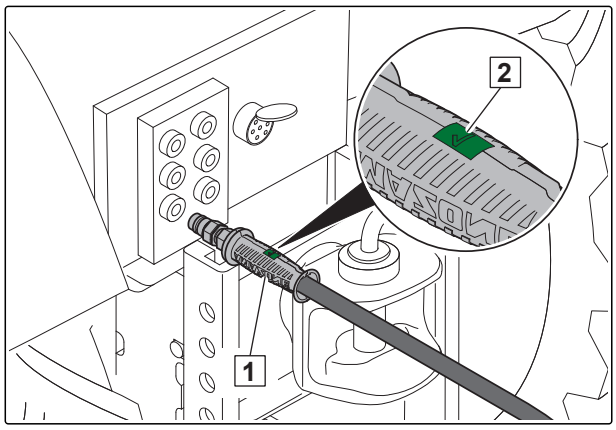

CMS-I-00001045

6.2.3 Coupling the power supply

CMS-T-00001399-F.1

1. Plug in the plug connector 1 for the power supply.

2. Route the power supply cable with sufficient freedom of movement and without chafing or pinching points.

3. Check the lighting on the implement for proper function.

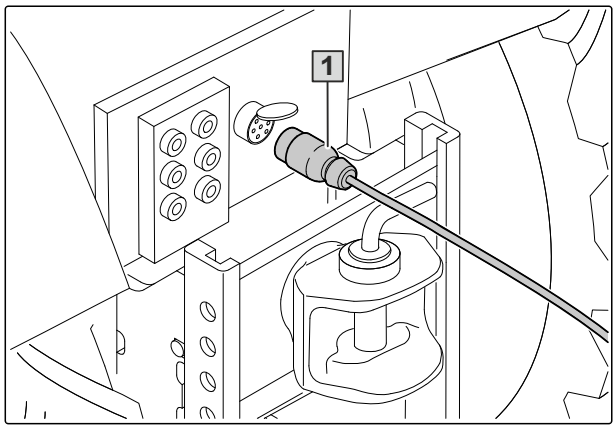

CMS-I-00001048

6.2.4 Connecting the camera system

CMS-T-00007677-B.1

1. Depending on the implement equipment, plug the plug connector for the camera system into the control terminal 1 or into an extension cable 2 at the rear of the tractor.

2. Route the camera system cable with sufficient freedom of movement and without chafing or pinching points.

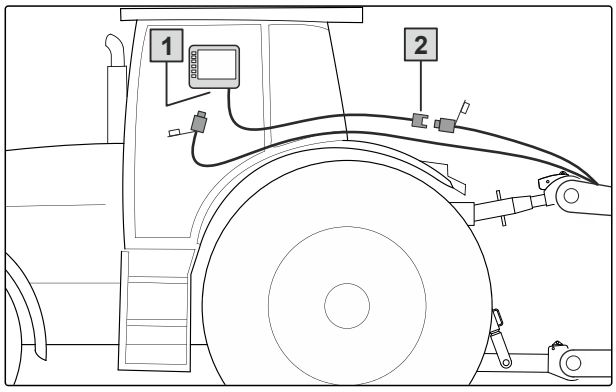

CMS-I-00007453

6.2.5 Coupling the 3-point mounting frame

CMS-T-00001400-G.1

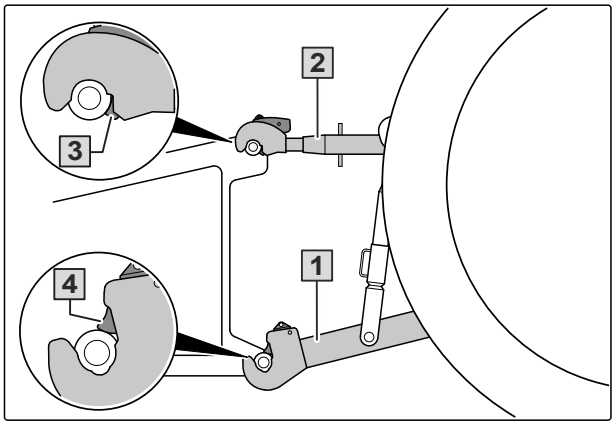

CMS-I-00001225

1. Set the tractor lower links 1 to the same height.
2. Couple the lower links 1 from the tractor seat.
3. Couple the top link 2.
4. Check whether the top link catch hooks 3 and lower link catch hooks 4 are correctly locked.

6.2.6 Coupling the pack top seed drill

CMS-T-00007994-A.1

CMS-I-00005558

WARNING

Risk of accident due to parking supports falling down

- *The parking supports do not have an arrest,*
  dismount the parking supports before driving off.

1. Slowly drive the tractor with the coupled soil tillage implement 1 under the pack top seed drill.
2. Dismount the lock bracket 3.
3. Slowly lift the soil tillage implement.

➡ The pack top seed drill 1 rests in the catching sockets 2 of the soil tillage implement.

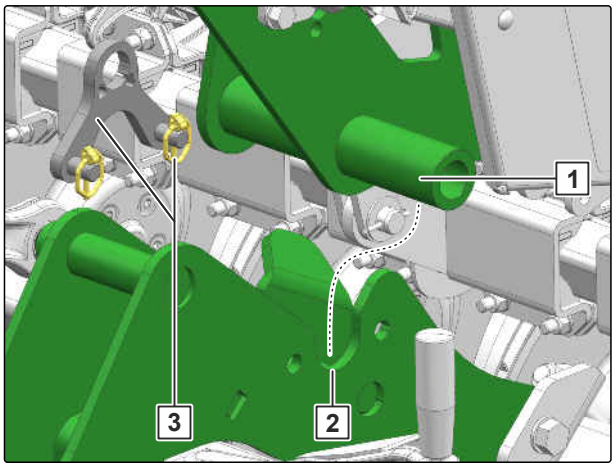

CMS-I-00003590

NOTE

The top edge of the hopper must be level when coupling on level ground.

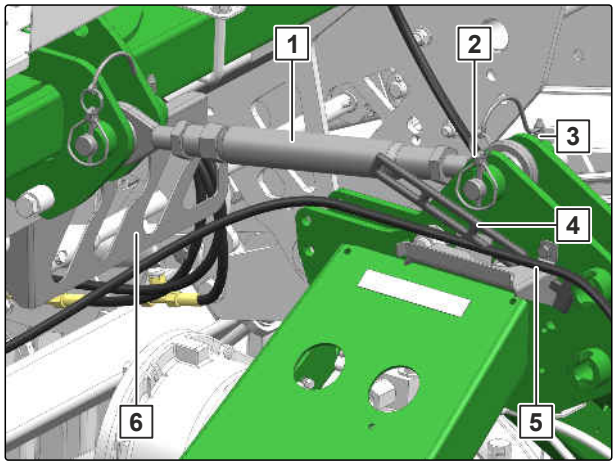

CMS-I-00004526

4. Mount the top link 1 with the pin 3.
5. Secure the pin with a linch pin 2.
6. Place the hydraulic hose lines from the hose cabinet 6 in the guide 5.
7. Place the supply line for the job computer in the guide.
8. Fix the hydraulic hose lines and supply line in place with the holder 4.

For the KE rotary harrow and the KX and KG rotary cultivators, the top link is adjusted to a length of 21.46 in (545 mm).

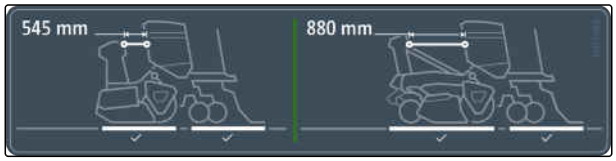

CMS-I-00005561

For the CombiDisc 3000 compact disk harrow, the top link is adjusted to a length of 34.65 in (880 mm).

9. Adjust the top link to the desired length.
10. Lift the soil tillage implement with the coupled seed drill.
11. Take the parking supports 1 out of the implement 2 on both sides.

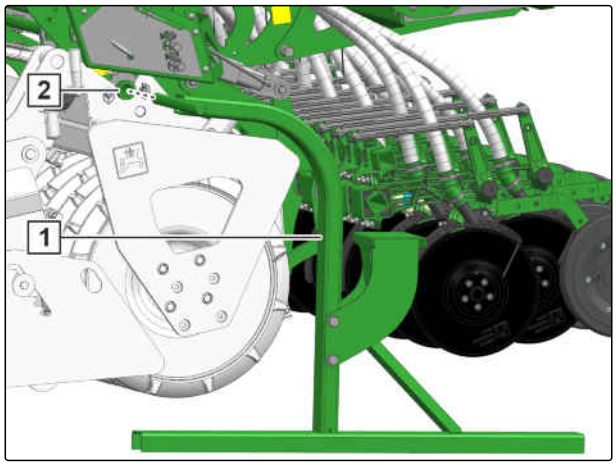

CMS-I-00004938

12. Mount the safety shackles 2 on all of the brackets 1.

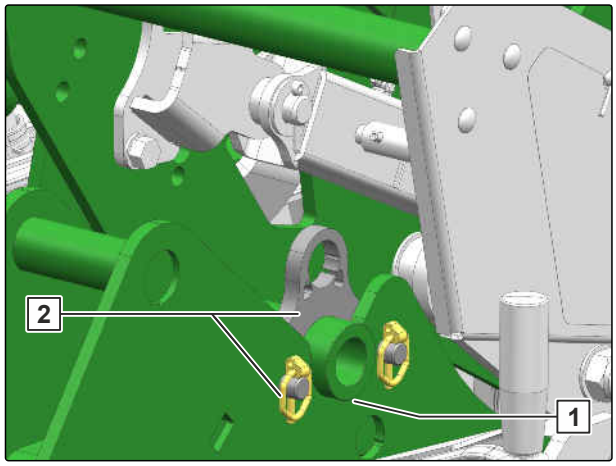

CMS-I-00003593

13. *If the seed drill has a tramline marker,* connect the supply line of the seed drill to the soil tillage implement 1.

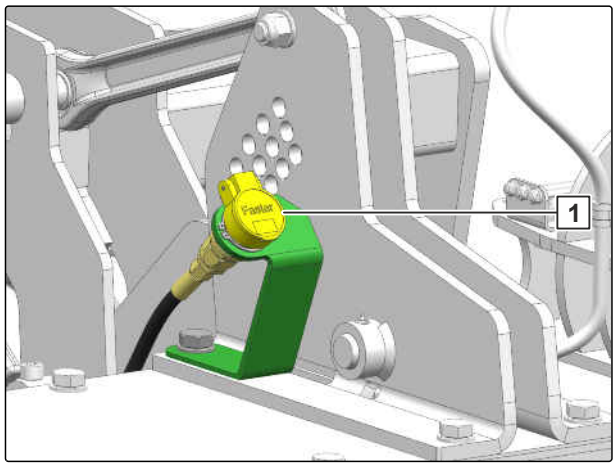

CMS-I-00003485

14. Connect the supply line 2 for the rear lighting and identification to the soil tillage implement 1.

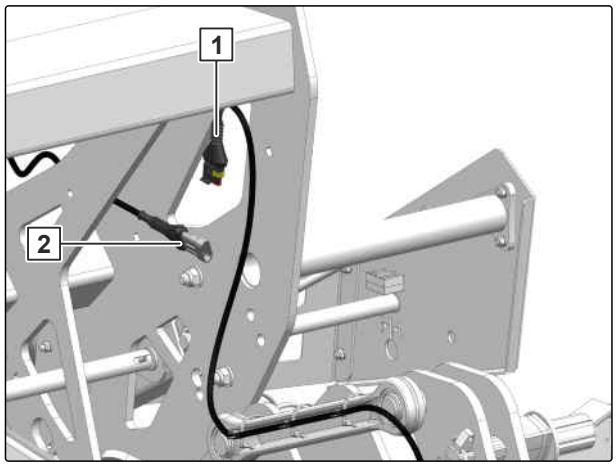

CMS-I-00004527

15. Connect the supply line 1 for monitoring the soil tillage implement 2.

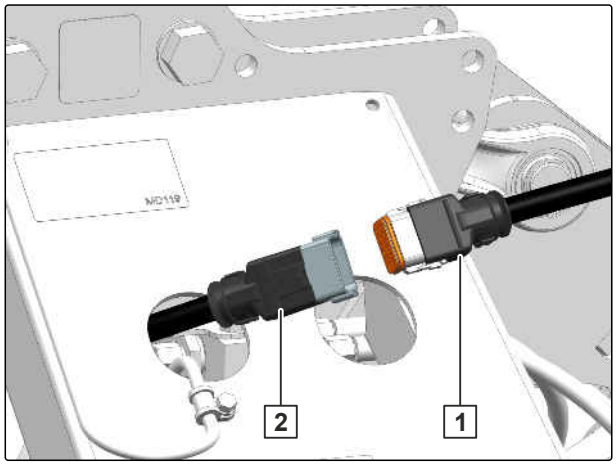

CMS-I-00004528

6.3 Preparing the implement for use

CMS-T-00008035-A.1

6.3.1 Adjusting the working position sensor

CMS-T-00003625-E.1

The working position sensor monitors the implement position in the 3-point hydraulic system and switches the metering drives. The lever length can be adjusted.

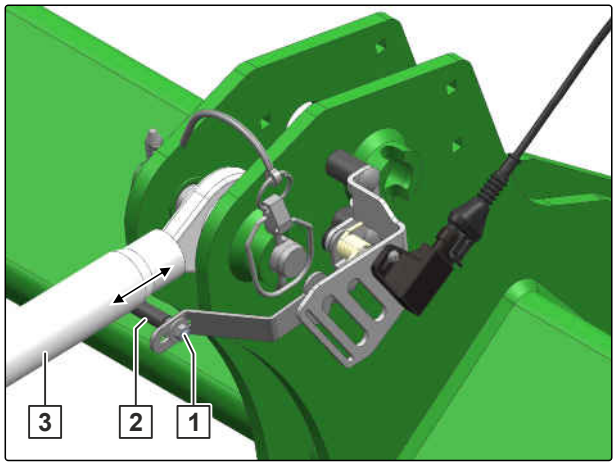

CMS-I-00002608

1. Unscrew the nut 1.
2. Adjust the lever 2 on a level support surface on the top link 3.
3. Tighten the nut.
4. *To ensure that the working position sensor is resting on a level surface,*
   completely lift and lower the implement.
5. *To configure the working position sensor,*
   see the ISOBUS software operating manual, *"Configuring the working position sensor"*

   or

   see operating manual *"control computer"*.

6.3.2 Operating the hopper cover

CMS-T-00008039-A.1

1. *To open the hopper cover:*
   Pull up the handle **1** on the hopper cover.

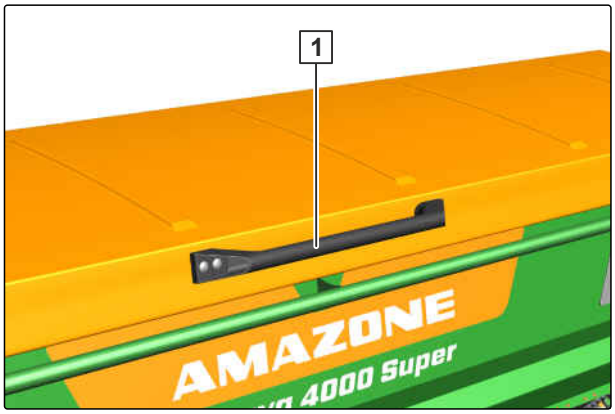

CMS-I-00005564

➡ The hopper cover opens **1** automatically.

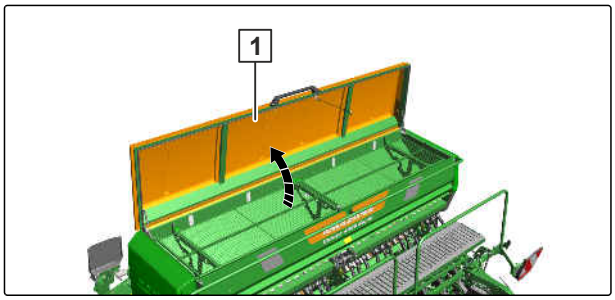

CMS-I-00005565

2. *To close the hopper cover:*
   Pull on the cord **1**.

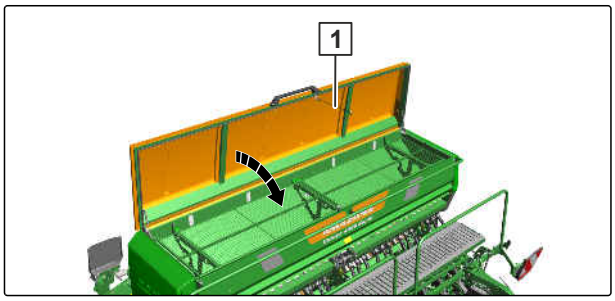

CMS-I-00005566

6.3.3 Adjusting the fill level sensor

CMS-T-00008048-A.1

The fill level sensor monitors the seed level in the hopper.

The number of fill level sensors can vary depending on the implement equipment.

For lower spread rates, the fill level sensor must be attached in the lower area of the hopper.

For higher spread rates, the fill level sensor must be attached in the upper area of the hopper.

1. Open the hopper cover.

2. Release the locking mechanism 1 with the universal operating tool 2.

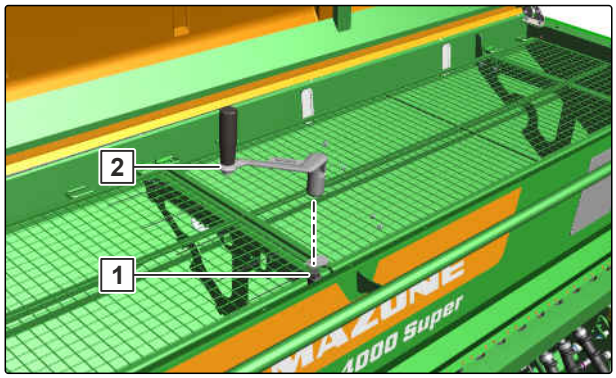

CMS-I-00005769

3. Slide the lock plate 1 to the side.

➡ The grating screens can be opened.

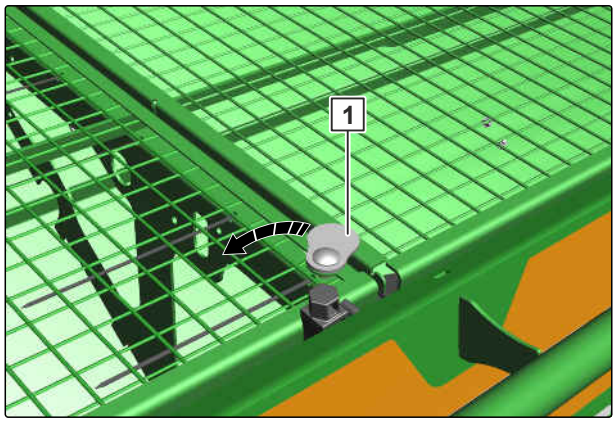

CMS-I-00005771

4. Swing up the grating screen 1.

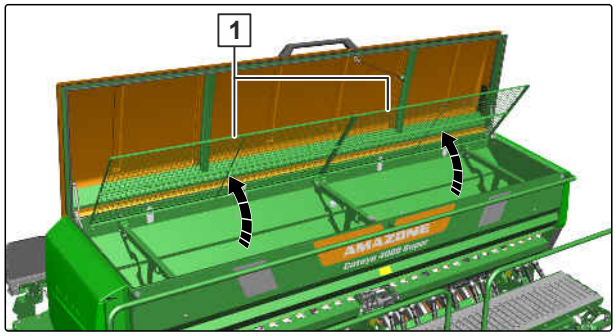

CMS-I-00005770

5. *To adjust the fill level sensor* 2*:*
   Unscrew the wing nut 1.

➡ The fill level sensor can be adjusted vertically.

6. Tighten the wing nut.

NOTE

When the fill level sensor is no longer covered, a warning message appears on the control terminal or control computer.

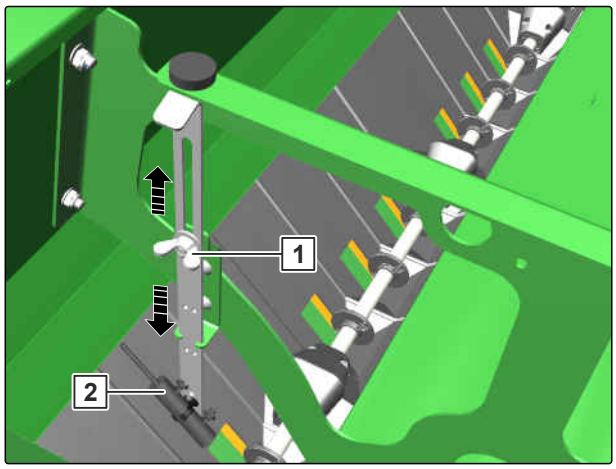

CMS-I-00005568

7. Close hopper cover.

6.3.4 Attaching the seed guide elements

Depending on the implement version, either 4 or 6 seed guide elements 1 are required for the hopper.

CMS-T-00009086-A.1

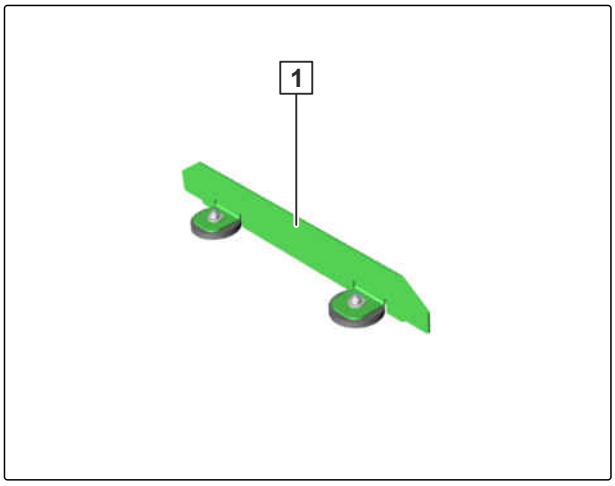

CMS-I-00006245

1. Open the hopper cover.

2. Release the locking mechanism 1 with the universal operating tool 2.

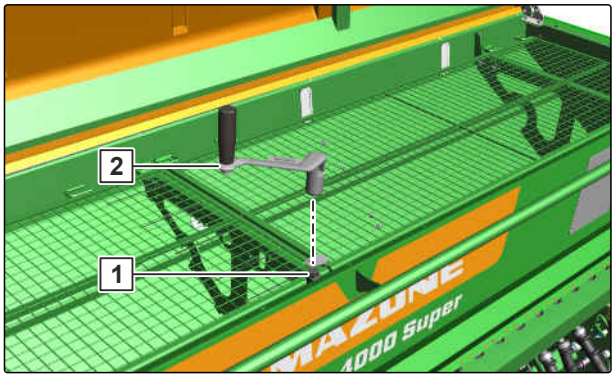

CMS-I-00005769

3. Slide the lock plate 1 to the side.

➡ The grating screens can be opened.

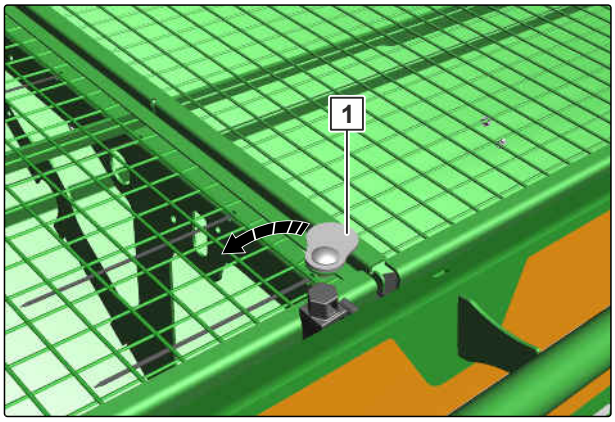

CMS-I-00005771

4. Swing up the grating screen **1**.

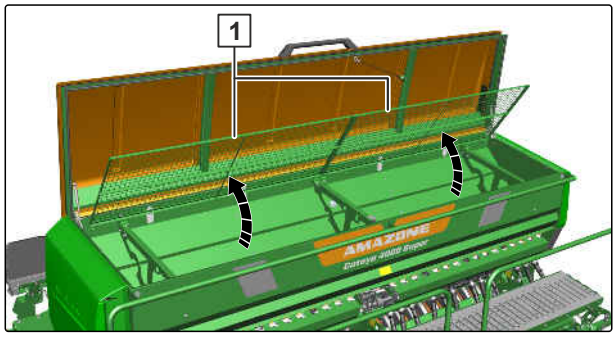

CMS-I-00005770

5. Place the seed guide elements **1** in the hopper.

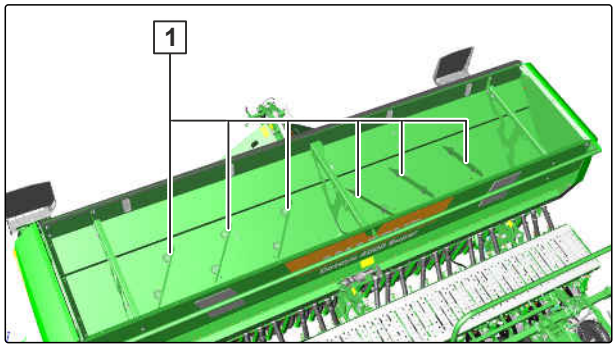

CMS-I-00006246

6. Swing down the grating screen **1**.
7. Close hopper cover.

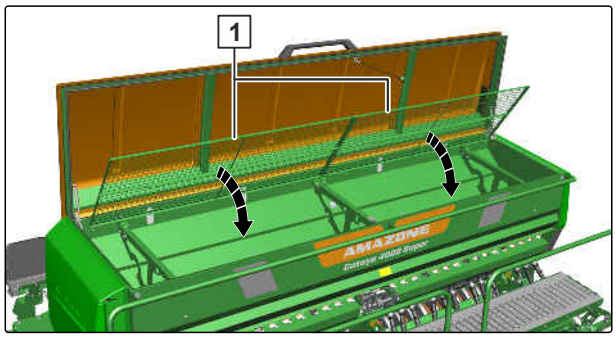

CMS-I-00006247

6.3.5 Filling the hopper

CMS-T-00008053-A.1

1. Lower the implement.
2. Open the hopper cover.
3. Fill the hopper via the grating screen **1**.
4. Close hopper cover.

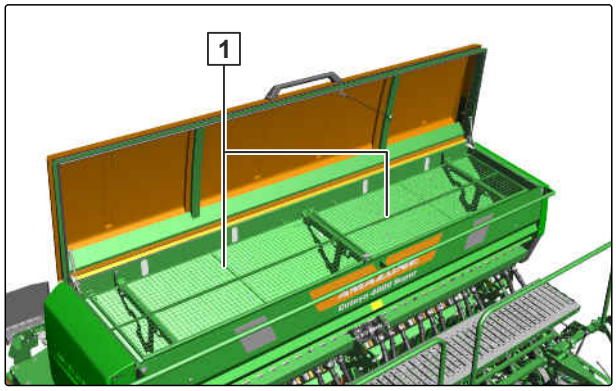

CMS-I-00005572

6.3.6 Adjusting the placement depth on the TwinTeC coulter

CMS-T-00004360-C.1

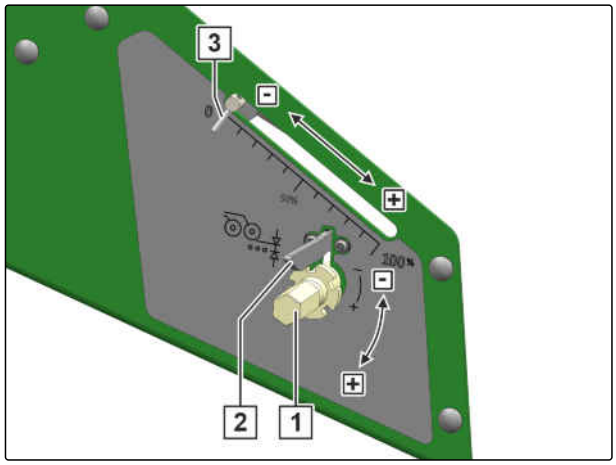

CMS-I-00003114

1. Lift out the implement.

2. Fit the universal operating tool on the adjustment spindle **1**.

NOTE

The adjustment of the seed placement depth must be adapted to the respective operating conditions. The optimal adjustment can only be determined in field operation.

3. *To reduce the seed placement depth:*
   Turn the universal operating tool counter-clockwise **-**

   or

   To increase the placement depth:
   Turn the universal operating tool **+** clockwise.

4. The scale **3** provides orientation.

5. Take off the universal operating tool and allow the catch **2** to engage in a groove of the grid.

6. *To check the adjustment:*
   Sow for approx. 98.43 ft (30 m) at working speed and then check the work pattern, see *"Checking the placement depth"*.

6.3.7 Adjusting the placement depth on the RoTeC coulter

CMS-T-00006301-C.1

The placement depth can be adjusted in 3 levels **2**. The higher the position of the depth control disks or depth control wheels, the greater the placement depth. The adjustment of the seed placement depth must be adapted to the respective operating conditions. The optimal adjustment can only be determined in field operation. The greatest placement depth is achieved by removing the depth control disks or depth control wheels.

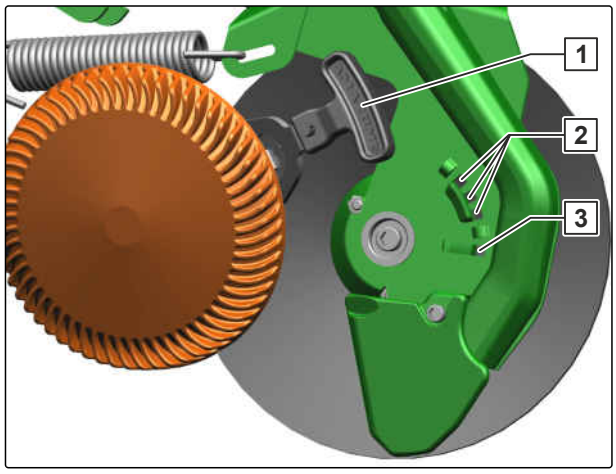

CMS-I-00004587

1. Pull on the lever **1** for the depth control disk or depth control wheel, move it up or down and let it engage in the desired position.

   or

   To completely take off the depth control disk or depth control wheel:
   Move the lever all the way down and push it to the rear in the slotted hole **3** until the depth control disk or depth control wheel can be removed.

2. Set all of the depth control disks or depth control wheels to the same height or take them off completely.

3. *To check the adjustment of the placement depth on the field:*
   Sow for approx. 98.43 ft (30 m) at working speed and then check the work pattern, see *"Checking the placement depth"*.

4. If the desired placement depth has not yet been reached, the coulter pressure must also be adjusted, see *"Manual coulter pressure adjustment"* or *"Hydraulic coulter pressure adjustment"*.

6.3.8 Manual coulter pressure adjustment

1. Lift out the implement.

2. Fit the universal operating tool on the adjustment spindle **1**.

NOTE

Adjustment of the coulter pressure must be adapted to the respective operating conditions. The optimal adjustment can only be determined in field operation.

CMS-T-00006426-B.1

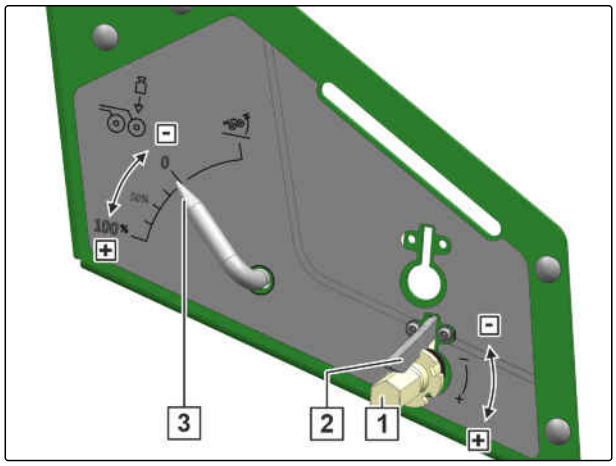

CMS-I-00004579

3. *To reduce the coulter pressure:*
   Turn the universal operating tool [-] counter-clockwise.

   or

   To increase the coulter pressure:
   Turn the universal operating tool [+] clockwise.

4. The scale [3] provides orientation.

5. Take off the universal operating tool and allow the catch [2] to engage in a groove of the grid.

6. *To check the adjustment:*
   Sow 98.43 ft (30 m) at working speed and check the work pattern.

6.3.9 Hydraulic coulter pressure adjustment

The actual coulter pressure is shown on the mechanical coulter pressure indicator on the front side of the implement.

NOTE

The scale value is only for orientation. The scale value does not correspond to a specific measurement.

CMS-T-00008057-A.1

CMS-I-00005586

1. *To activate the function for implements with Comfort hydraulic system:*
   See ISOBUS software operating manual *"Pre-selection for hydraulic functions"*

   or

   see operating manual *"control computer"*.

2. *To adjust the values for the coulter pressure on implements with the Comfort hydraulic system:*
   See ISOBUS software operating manual *"Coulter pressure settings"*

   or

   see operating manual *"control computer"*.

WARNING Unexpected movement of coulter and exact following harrow

The hydraulic cylinders for the coulter pressure adjustment and for the exact following harrow pressure adjustment are activated simultaneously.

- *Before activating the tractor control unit,* instruct people to leave the danger area.

3. *To increase the coulter pressure:*
   activate the tractor control unit *"green 1"*

   or

   To reduce the coulter pressure:
   Activate the tractor control unit *"green 2"*.

4. *To check the adjustment:*
   Sow 98.43 ft (30 m) at working speed and check the work pattern.

6.3.10 Adjusting the coulter harrow

CMS-T-00006627-D.1

6.3.10.1 Adjusting the harrow angle

CMS-T-00004372-D.1

When driving in reverse, the harrow tine 1 folds to the front and rests on the locking pin 2. As a result, the harrow tine does not protrude into the adjacent coulters.

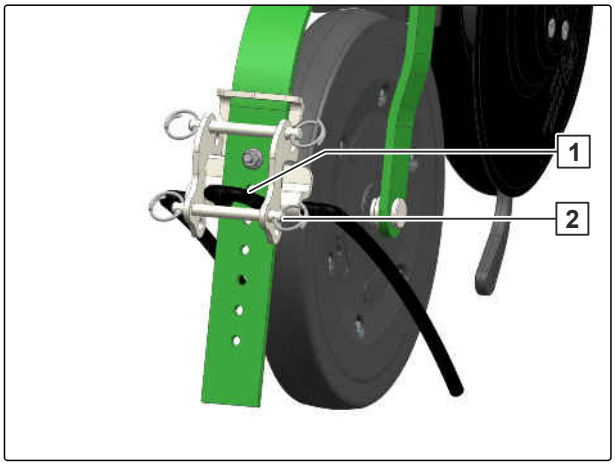

CMS-I-00003184

IMPORTANT

Coulter damage due to folded harrow tines

- Do not remove the locking pin.

1. Lift out the implement.

NOTE

The adjustment of the harrow angle must be adapted to the respective operating conditions. The optimal adjustment can only be determined in field operation.

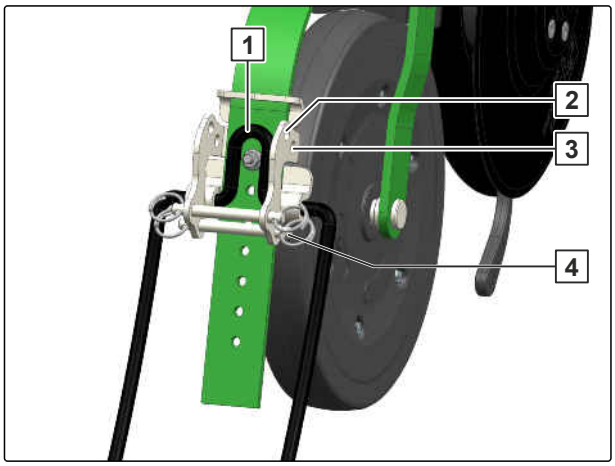

CMS-I-00003187

2. *To bring the harrow tines 1 into the shallow working position:*
   Leave the pin 4 in the position

   or

   To bring the harrow tines into the medium working position:
   Mount the pin 4 in hole 3.

   or

   To bring the harrow tines into the steep working position:
   Mount the pin 4 in hole 2.

3. *To check the adjustment:*
   Sow 98.43 ft (30 m) at working speed and check the work pattern.

6.3.10.2 Deactivating the harrow tines

CMS-T-00004370-C.1

1. Lift out the implement.
2. Dismount pins 1 and 2.

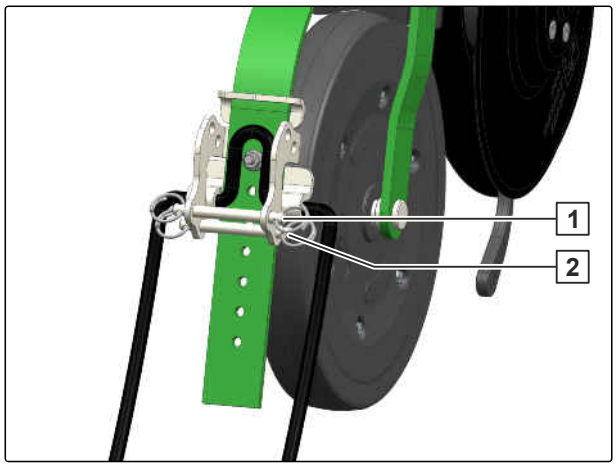

CMS-I-00003188

3. Swing harrow 1 upwards.
4. Mount pins 2 3 in the indicated hole.

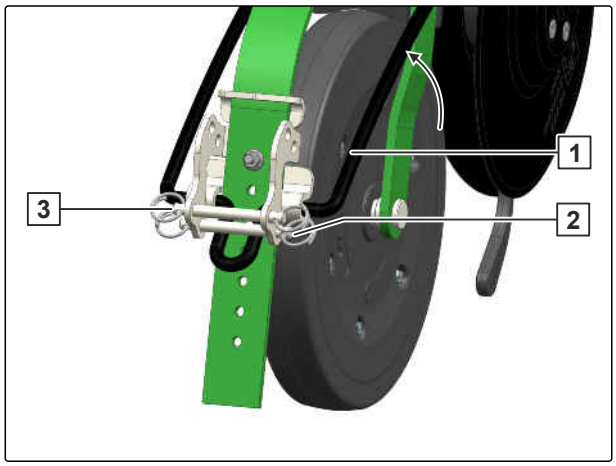

CMS-I-00003183

6.3.10.3 Adjusting the harrow height

CMS-T-00006457-B.1

1. Remove nut 1.
2. Remove the bolt 3.

NOTE

Adjustment of the harrow height must be adapted to the respective operating conditions. The optimal adjustment can only be determined in field operation.

3. Bring the harrow holder 2 into the desired position.
4. Mount the bolt 3.

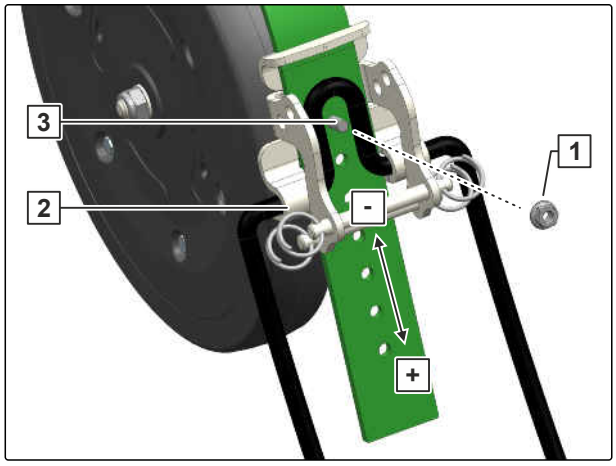

CMS-I-00003182

5. Mount and tighten the nut 1.

6. *To check the adjustment:*
   Sow 98.43 ft (30 m) at working speed and check the work pattern.

6.3.11 Adjusting the exact following harrow

CMS-T-00008068-A.1

6.3.11.1 Bringing the exact following harrow or seed harrow into working position

CMS-T-00006334-D.1

The roller and the coulters press the soil far to the outside differently depending on forward speed and soil condition. The outer harrow elements must be adjusted such that the soil is guided back and a trackless seedbed is created. The greater the forward speed, the further the outer harrow elements must be set outwards.

1. Unscrew the bolt 2 with the universal operating tool.

2. Push the sliding element 1 outward.

3. Tighten the bolt 2 with the universal operating tool.

4. Make the same adjustment on the other side of the implement.

5. *To check the adjustment:*
   Sow 98.43 ft (30 m) at working speed and check the work pattern.

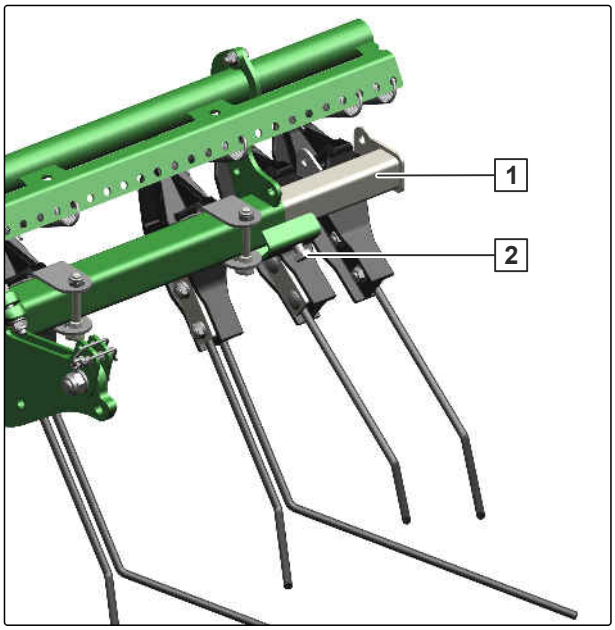

CMS-I-00004674

6.3.11.2 Adjusting the position of the exact following harrow tines

CMS-T-00008069-A.1

When the exact following harrow is properly adjusted, the harrow tines rest horizontally on the ground and have downward play of 1.97 in (50 mm) to 3.15 in (80 mm).

To make adjustments, the distance **A** between the carrier tube and the ground is adjusted. The distance must be between 9.06 in (230 mm) and 11.02 in (280 mm).

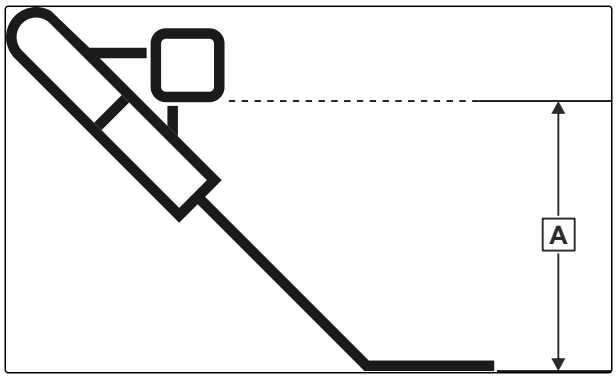

CMS-I-00004668

1. Fit the universal operating tool on the adjustment spindle **2**.

2. *To set the exact following harrow deeper:*
   Turn the universal operating tool counter-clockwise

   or

   To set the exact following harrow higher:
   Turn the universal operating tool clockwise.

3. Position the grid **1** such that a groove is at the top.

4. Take off the universal operating tool and allow the catch **3** to engage in the groove.

5. *To check the adjustment:*
   Sow 98.43 ft (30 m) at working speed and check the work pattern.

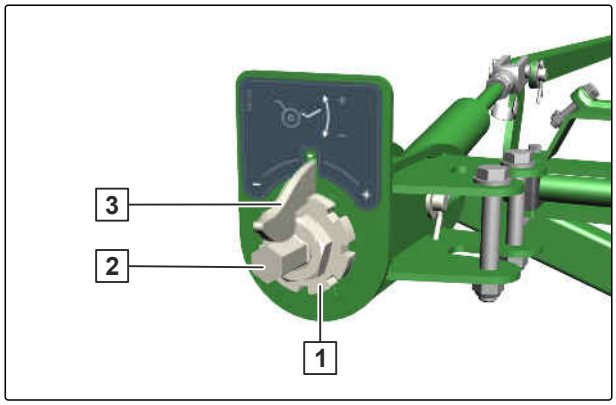

CMS-I-00005591

6.3.11.3 Manual pressure adjustment of the exact following harrow

CMS-T-00006333-E.1

The exact following harrow pressure must be adjusted such that all seed rows are uniformly covered with soil. For heavy soils, the pressure must be higher than it is for light soils.

1. Turn the lever 1 out of the transport lock 2 and pull it upwards.

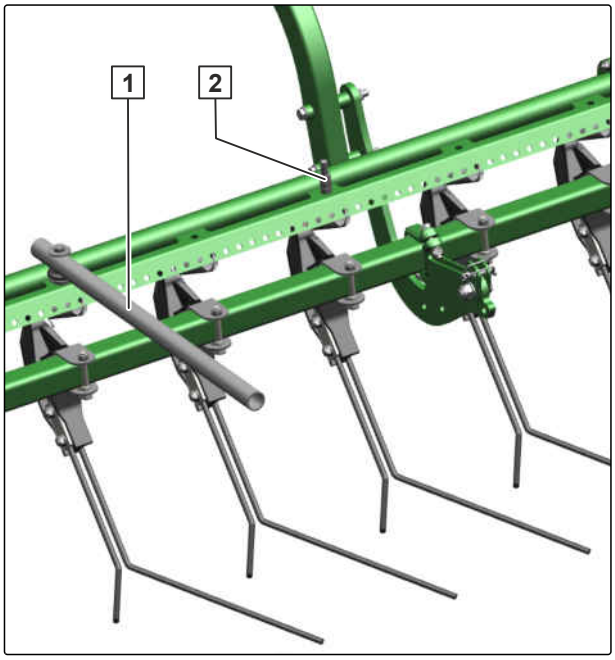

CMS-I-00004673

The exact following harrow pressure is determined by tension springs, which are attached to a rotating tube. To adjust the pressure, a stop is pegged onto the tube. The higher the position of the stop, the greater the exact following harrow pressure.

NOTE

The pressure adjustment of the exact following harrow must be adapted to the respective operating conditions. The optimal adjustment can only be determined in field operation.

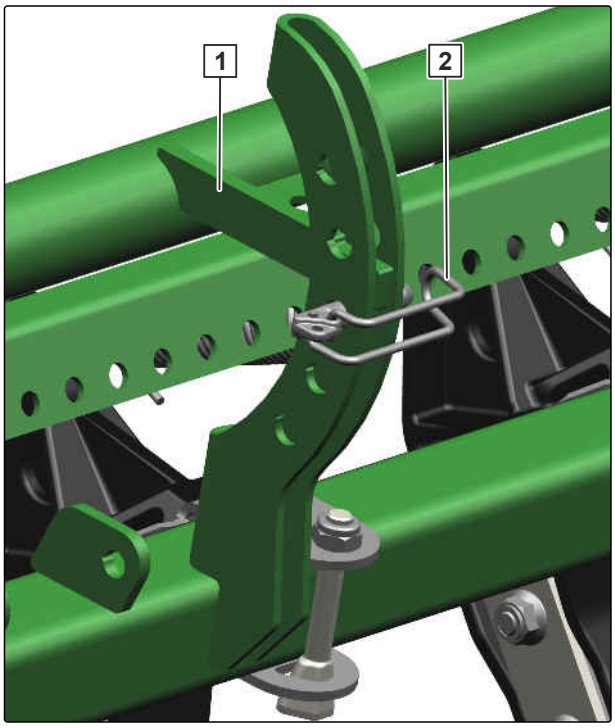

CMS-I-00004671

2. *To increase the exact following harrow pressure:*
   Remove the linch pin 2 and mount it in a higher hole under the stop 1

   or

   To reduce the exact following harrow pressure:
   Dismount the linch pin 2 and mount it in a lower hole under the stop 1.

3. Offload the lever and fasten it in transport position.

4. *To check the adjustment:*
   Sow 98.43 ft (30 m) at working speed and check the work pattern.

6.3.11.4 Hydraulic adjustment of the exact following harrow pressure

CMS-T-00006338-C.1

The exact following harrow pressure must be adjusted such that all seed rows are uniformly covered with soil. For heavy soils, the pressure must be higher than it is for light soils.

To make adjustments, the minimum pressure and the maximum pressure of the exact following harrow must first be defined by mechanical pegging.

Then the exact following harrow pressure is hydraulically adjusted together with the coulter pressure. With higher coulter pressure, 'a higher exact following harrow pressure is also set at the same time.

1. Take the lever **1** out of the transport lock **2** and pull it upwards.

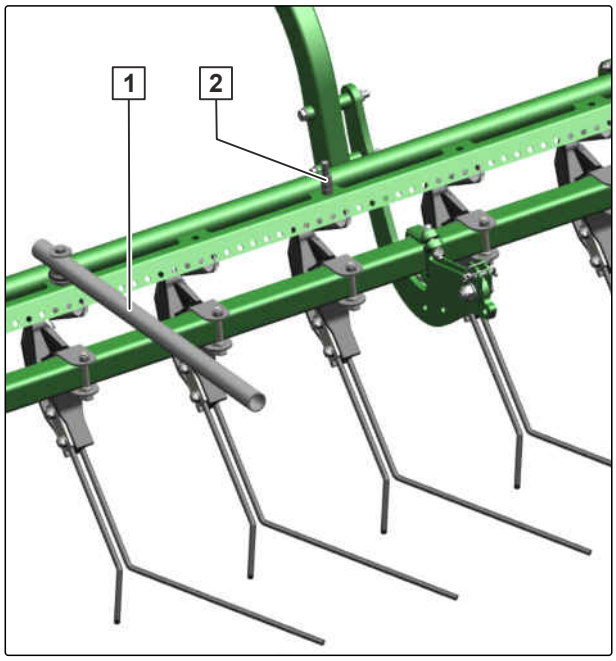

CMS-I-00004673

2. *To define the minimum pressure of the exact following harrow:*
   Dismount the linch pin 3 and mount it in the desired hole under the stop 1. The higher the hole, the greater the minimum pressure of the exact following harrow.

3. Offload the lever and fasten it in the transport lock.

4. *To define the maximum pressure:*
   Remove the second linch pin 2 and mount it in the desired hole above the stop 1. The higher the hole, the greater the maximum pressure of the exact following harrow.

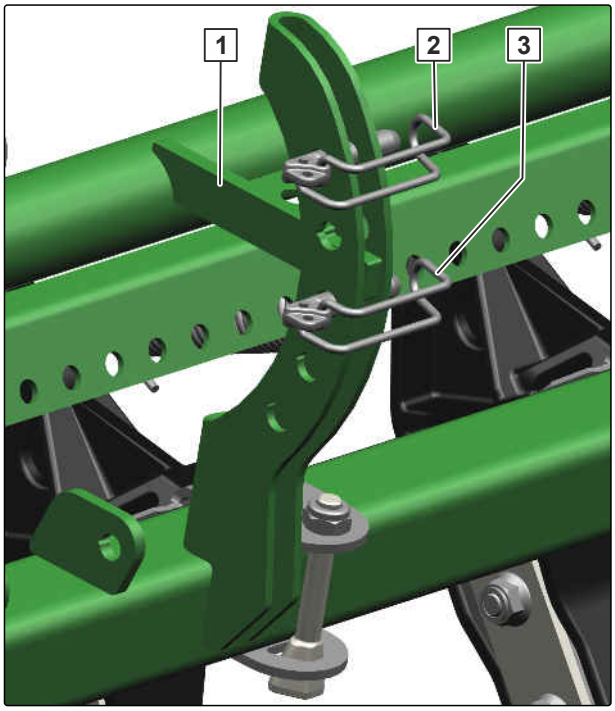

CMS-I-00004672

5. *To increase the exact following harrow pressure:*
   Activate the tractor control unit *"green 1"*

   or

   To reduce the exact following harrow pressure:
   Activate the tractor control unit *"green 2"*.

6. *To check the adjustment:*
   Sow 98.43 ft (30 m) at working speed and check the work pattern.

6.3.11.5 Lifting out the exact following harrow

For seed drills with exact following harrow lift-out, the exact following harrow can be lifted out independently of the position of the coulters.

A hydraulic cylinder 1 lifts the exact following harrow.

CMS-T-00006415-A.1

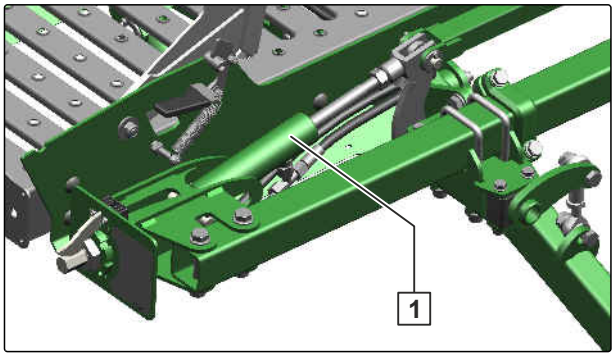

CMS-I-00004703

▶ *To lift out the exact following harrow,*
activate the *"blue 2"* tractor control unit until the hydraulic cylinder is retracted into end position.

or

To lower the exact following harrow,
activate the *"blue 1"* tractor control unit until the hydraulic cylinder is extended into end position.

6.3.12 Adjusting the roller harrow

CMS-T-00008071-A.1

6.3.12.1 Adjusting the pitch of the harrow tines

CMS-T-00007387-B.1

1. Lift the implement until the harrow tines no longer touch the ground.

2. *To change the pitch of the harrow tines:*
Peg the linch pin **2** underneath the link **1**.

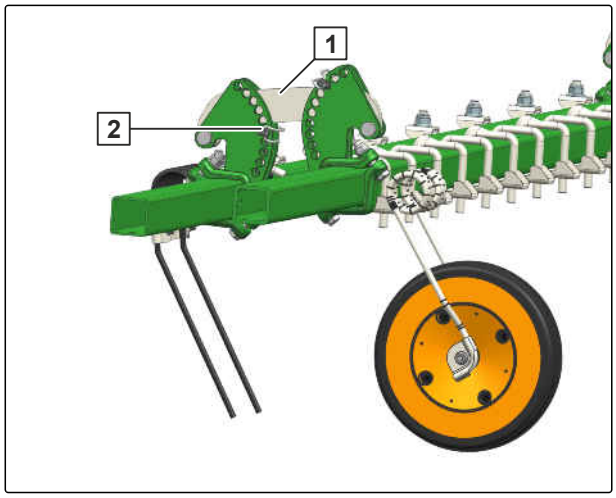

CMS-I-00005161

3. *To check the adjustment:*
Sow 98.43 ft (30 m) at working speed and check the work pattern.

6.3.12.2 Adjusting the working depth of the harrow tines

CMS-T-00007388-B.1

1. Lift the implement until the harrow tines no longer touch the ground.

2. *To change the working depth of the harrow tines:*
Peg the linch pin **2** above the link **1**.

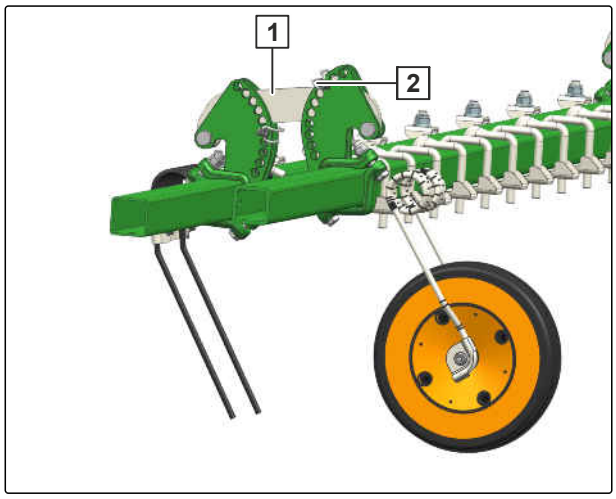

CMS-I-00005162

3. *To check the adjustment:*
   Sow 98.43 ft (30 m) at working speed and check the work pattern.

6.3.12.3 Adjusting roller contact pressure

A scale underneath the SmartCenter shows the set roller contact pressure as a percentage.

CMS-T-00008072-A.1

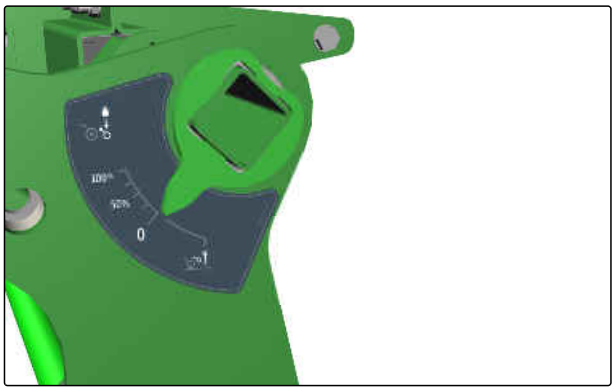

CMS-I-00005594

1. Fit the universal operating tool on the adjustment spindle **2**.

2. *To increase the roller contact pressure:*
   Turn the universal operating tool clockwise.

   or

   To reduce the roller contact pressure:
   Turn the universal operating tool counter-clockwise.

3. Position the grid **3** such that a groove is at the top.

4. Take off the universal operating tool and allow the catch **1** to engage in the groove.

5. *To check the adjustment:*
   Sow 98.43 ft (30 m) at working speed and check the work pattern.

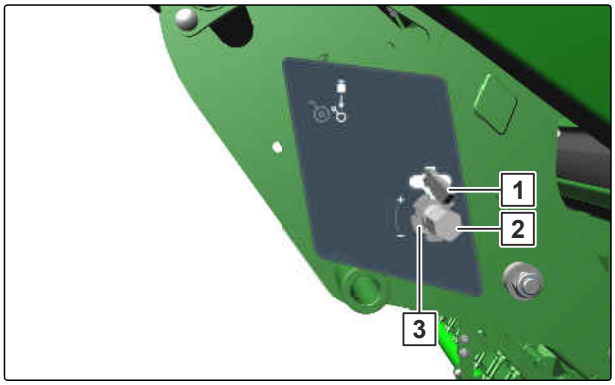

CMS-I-00005595

6.3.12.4 Lifting out the roller harrow

CMS-T-00008073-A.1

1. Fit the universal operating tool on the adjustment spindle **2**.

2. *To lift out the roller harrow:*
   Turn the universal operating tool counter-clockwise.

3. Position the grid **3** such that a groove is at the top.

4. Take off the universal operating tool and allow the catch **1** to engage in the groove.

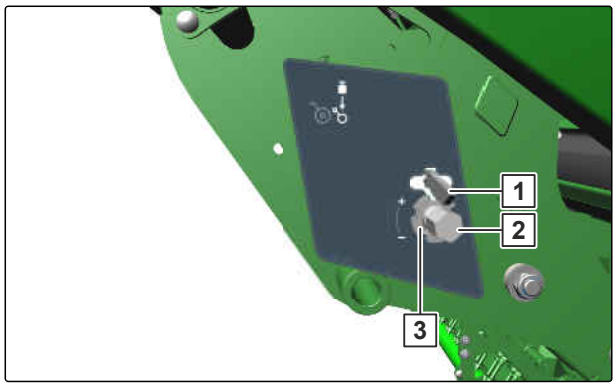

CMS-I-00005595

➡ When the pointer **1** is at the end of the scale **2**, the coulters are completely lifted-out.

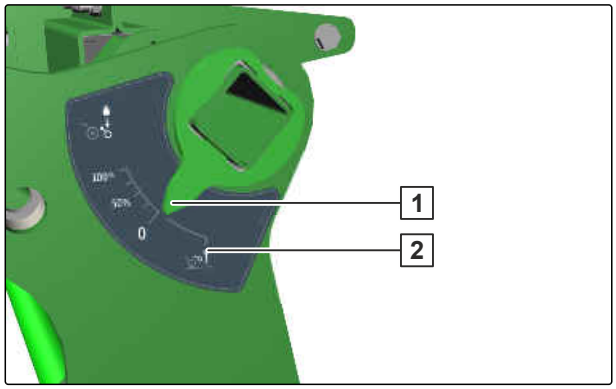

CMS-I-00005600

6.3.13 Adjusting the tramlines

CMS-T-00008084-A.1

6.3.13.1 Adjusting the tramline marker

CMS-T-00008298-A.1

6.3.13.1.1 Adjusting track width

CMS-T-00004375-F.1

1. Determine the track width **a** of the cultivating implement.

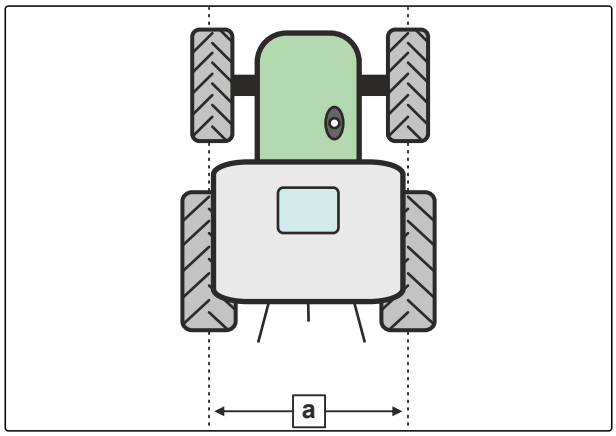

CMS-I-00003195

2. Peg the adjuster segment **4** in the middle hole

   or

   To create a double tramline with a track width of 7.22 ft (2.2 m):
   Set the track disks at 6.56 ft (2 m) and select the outer holes on the adjuster segment.

3. Unscrew bolts **2**.

4. *To adjust the tramline marker to the track width of the cultivating implement:*
   Move the holder **3** on the profile tube **1**.

5. Bring the track disk into the desired position.

6. Tighten bolts.

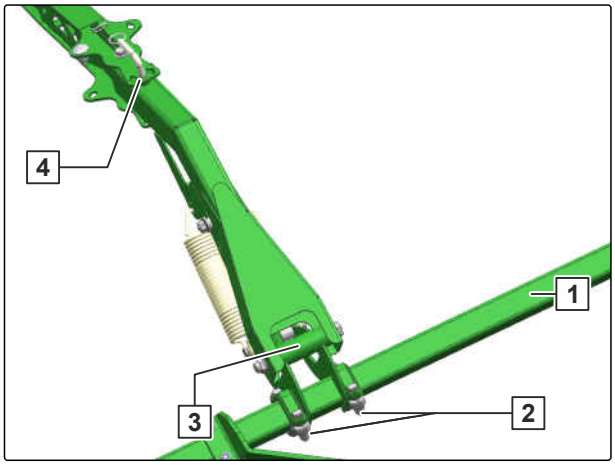

CMS-I-00003169

With the adjacent pegging holes, the set track width **a** can be varied.

7. Remove the pins **1** and **2** from the pegging hole.

8. *To reduce the track width of the tramline marker by 7.87 in (20 cm):*
   Peg the pin in position **-**,

   or

   To increase the track width of the tramline marker by 7.87 in (20 cm):
   Peg the pin in position **+**.

9. *To secure the pin in the adjuster segment:*
   Turn the pin downwards.

10. *To check the adjustment:*
    Sow 98.43 ft (30 m) at working speed and check the work pattern.

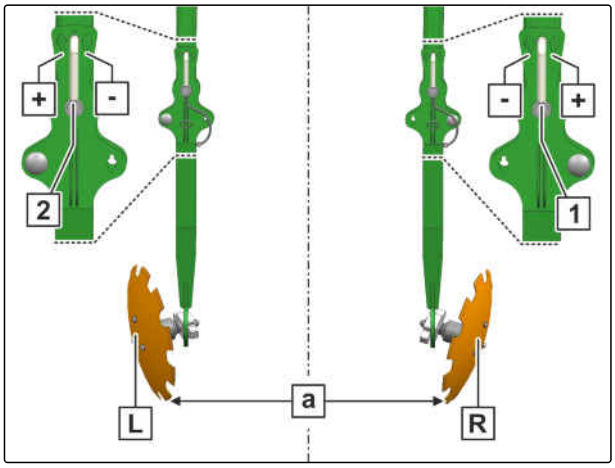

CMS-I-00003170

6.3.13.1.2 Adjusting the track disk pitch

CMS-T-00004377-D.1

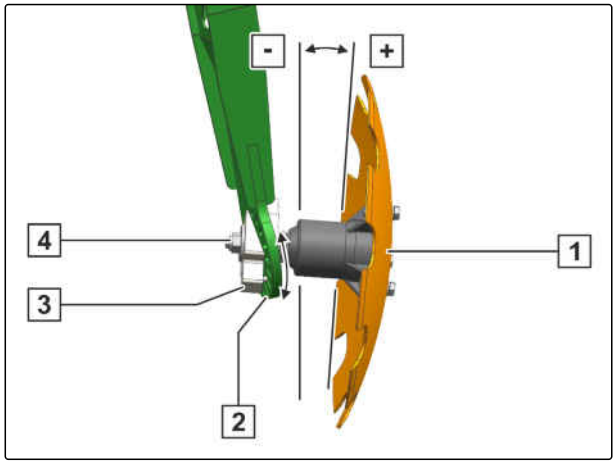

CMS-I-00003171

1. Unscrew the nut **4**.
2. *To increase the effect of the track disk* **1**:
   Increase the pitch

   or

   To reduce the effect of the track disk:
   Reduce the pitch.
3. Bring the clamping part **3** in the grid **2** into the desired position.
4. Tighten the nut.
5. *To check the adjustment:*
   Sow 98.43 ft (30 m) at working speed and check the work pattern.

6.3.13.2 Mounting the tramline metering wheel

CMS-T-00008231-B.1

Depending on the wheelmark width, a different number of tramline metering wheels are mounted next to each other.

Depending on the track width, the tramline metering wheels mounted next to each other are positioned differently.

1. Fit the universal operating tool **3** on the locking mechanism **2**.

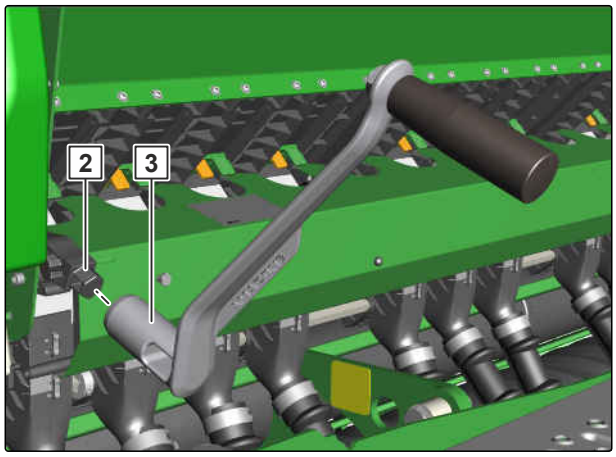

CMS-I-00005742

2. *To open the locking mechanism:*
   Move the universal operating tool 2 upwards.

➡ The metering unit cover 1 can be opened.

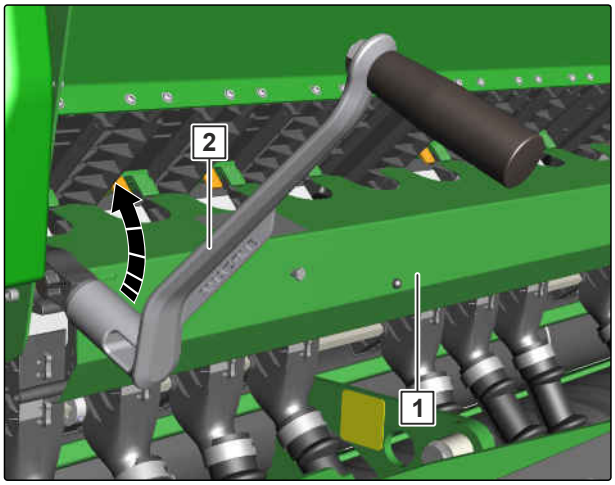

CMS-I-00005740

3. Open the lay shaft bearing 1.

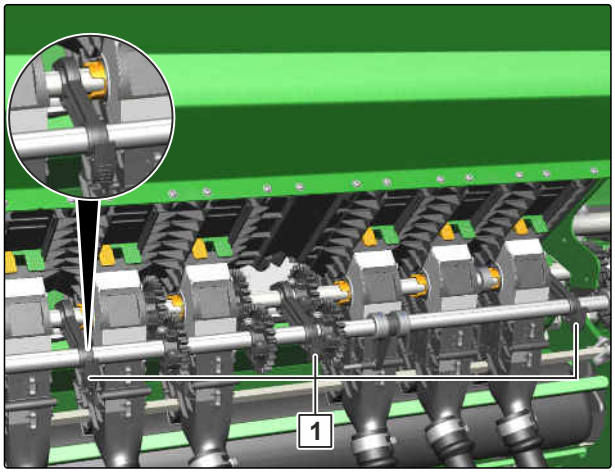

CMS-I-00005651

4. Swing down the lay shaft 1.

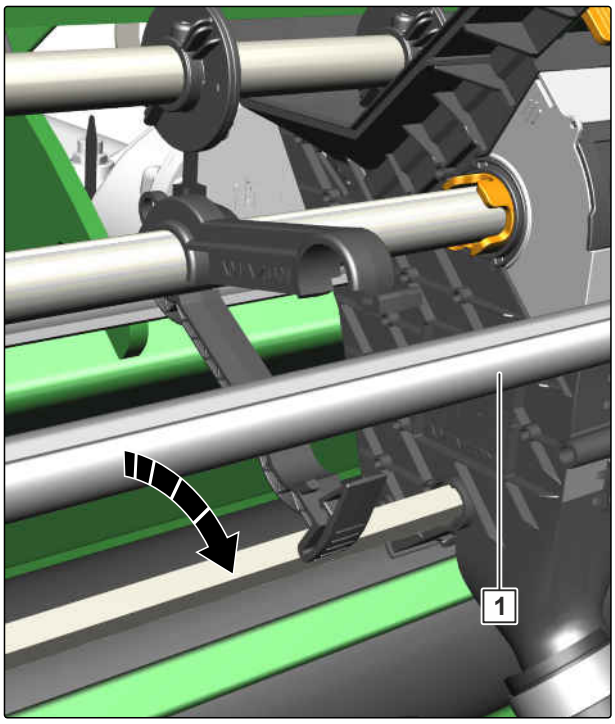

CMS-I-00005652

5. Determine the wheelmark width **c** of the cultivating implement.

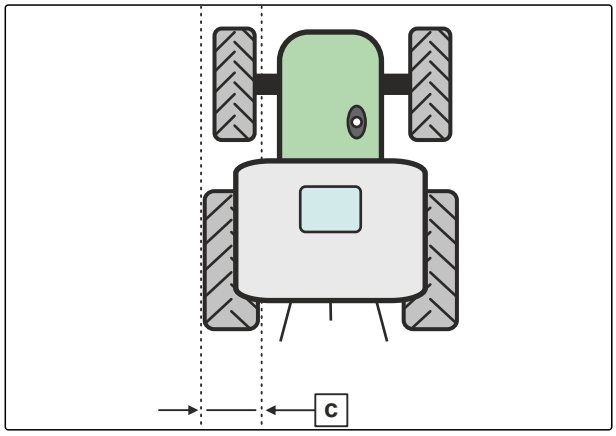

CMS-I-00003196

6. Determine the track width **a** of the cultivating implement.

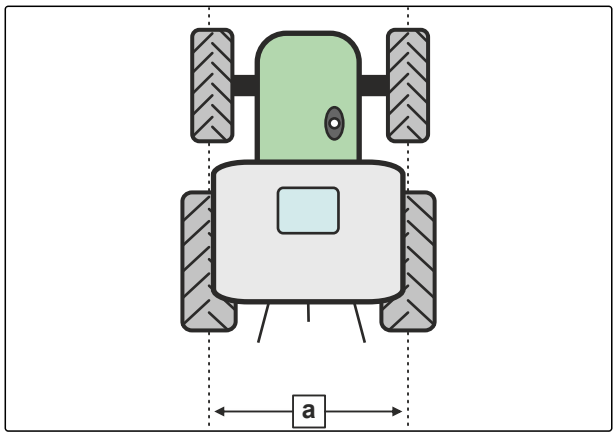

CMS-I-00003195

7. Flip down the metering wheel cover **1**.

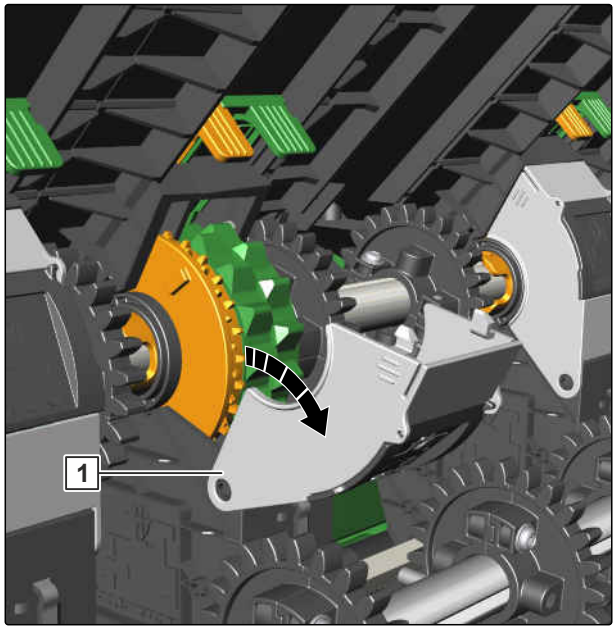

CMS-I-00005653

IMPORTANT

Damage to the seed housing due to a protruding bolt

- Do not unscrew the hexagon socket bolt too far.

8. Unscrew the hexagon socket bolt 1 on the metering wheel until the metering wheel can rotate freely on the seeding shaft.

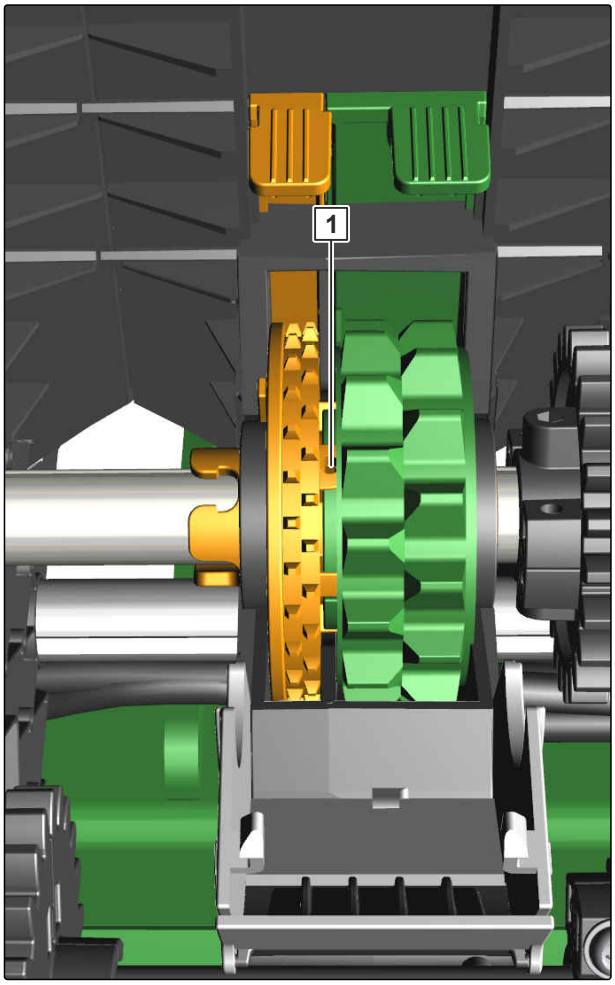

CMS-I-00005654

9. Put the spur gear 3 on the seeding shaft 2.

10. Tighten bolts 1.

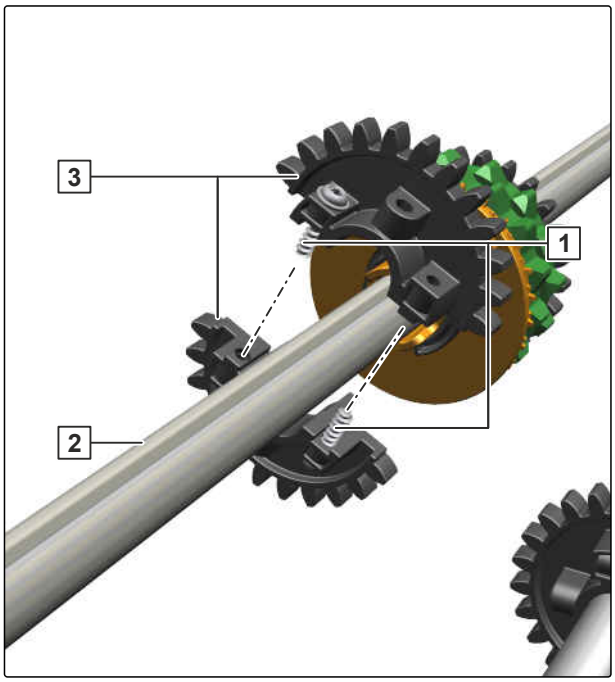

CMS-I-00005655

11. Fasten the spur gear 1 on the metering wheel 3.

12. Unscrew the hexagon socket screw 2 on the spur gear until the spur gear can rotate freely on the seeding shaft.

➡ The spur gear moves together with the metering wheel on the seeding shaft.

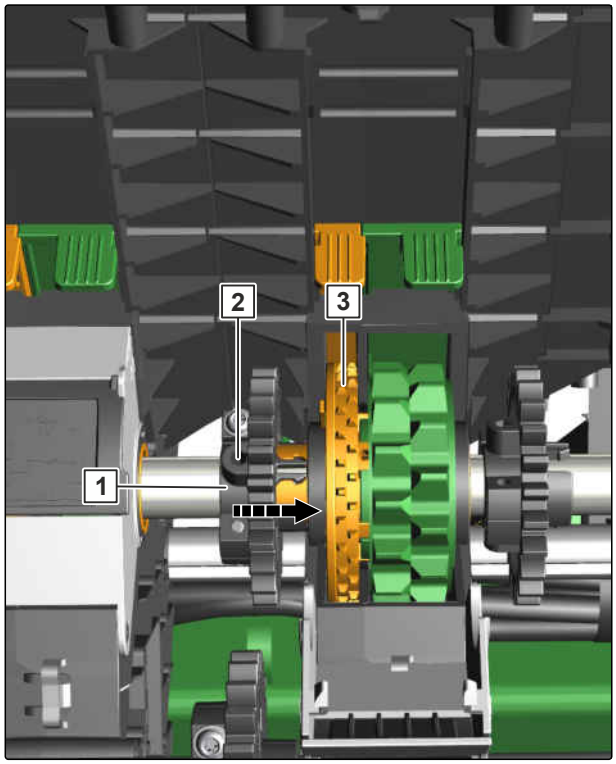

CMS-I-00005658

13. Flip up the metering wheel cover 4.

14. Unscrew the hexagon socket screw 2.

15. Position the spur gear 1 on the lay shaft under the spur gear 3 of the seeding shaft.

16. Tighten the hexagon socket bolt 2.

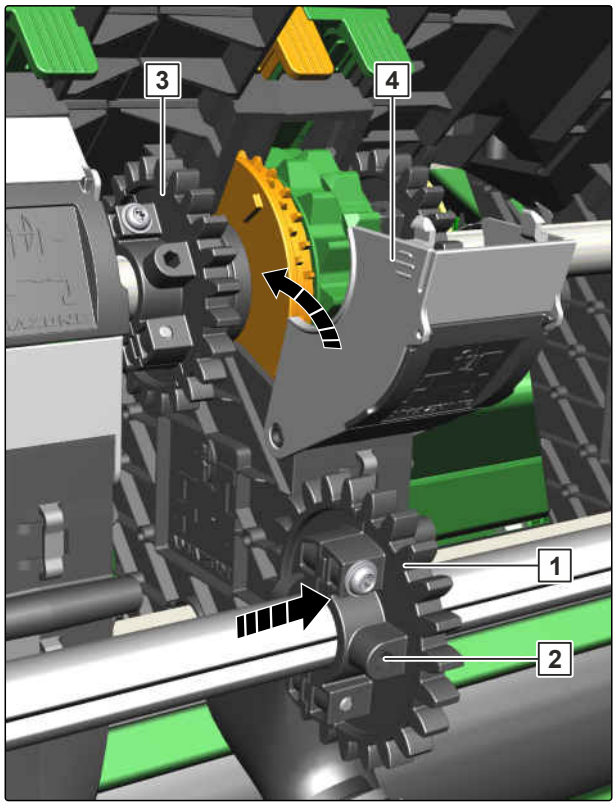

CMS-I-00005659

17. Swing up the lay shaft 1.

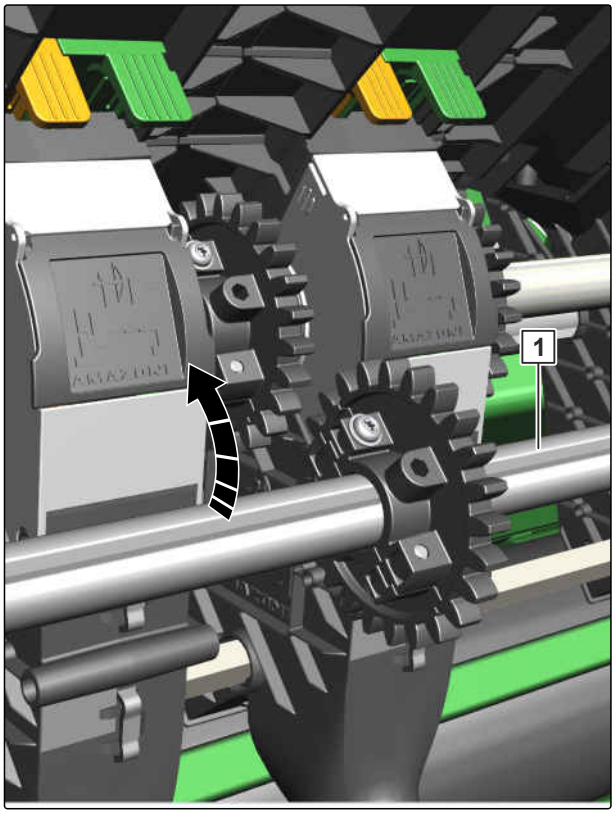

CMS-I-00005660

18. Close the lay shaft bearing 1.

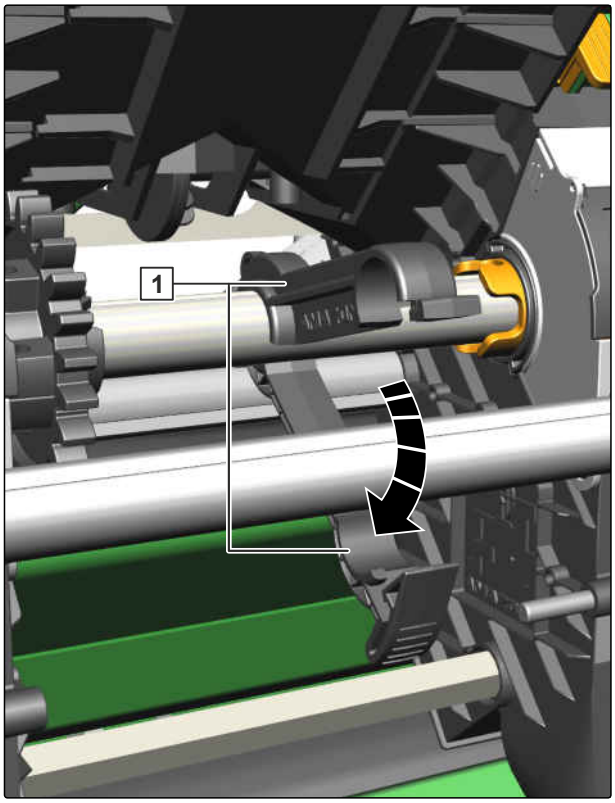

CMS-I-00005661

19. Attach the metering unit cover 1.

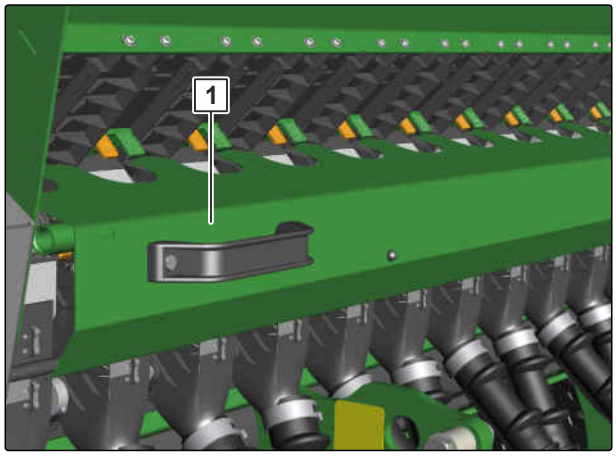

CMS-I-00006114

6.3.14 Operating one-sided switching

CMS-T-00008293-A.1

Implements with a seeding shaft drive motor have a lay shaft coupling at the center of the implement and a lay shaft coupling for one-sided switch-on / switch-off of the seeding shaft and lay shaft, at the center of the implement.

On implements with 2 electric metering drives, each half of the seeding shaft is driven by one metering drive.

1. Pull the handles 1 of the couplings to the left side.

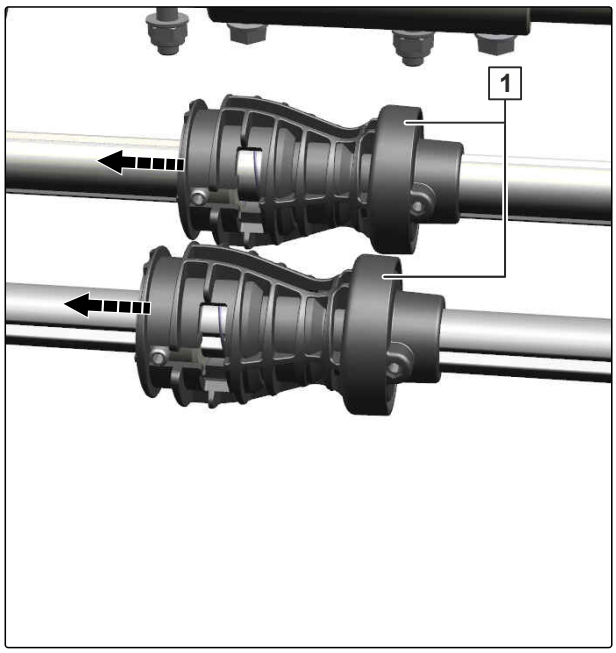

CMS-I-00005662

2. Turn the handles 1 of the couplings downwards.

➡ One-sided switching is active.

NOTE

On implements with a seeding shaft drive motor, the side of the implement opposite to the motor is always switched off.

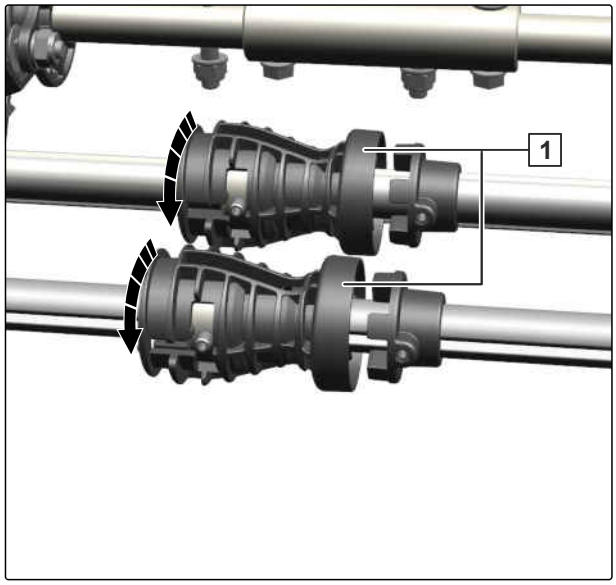

CMS-I-00005663

3. *To activate one-sided switching for implements with 2 electric metering drives:*
   See the *"ISOBUS software operating manual"*

   or

   see operating manual *"control computer"*.

6.3.15 Operating the loading board steps

CMS-T-00007020-C.1

REQUIREMENTS

✓ The seed drill is coupled to the soil tillage implement

1. Hold the steps 2 in position.
2. *To unfold the steps,*
   Release the transport lock 1.
3. Swing the steps downwards.
4. Climb onto the loading board 3 via the steps.
5. After use, swing the steps upwards and bring them into parking position.

➡ The transport lock engages automatically.

6. Check whether the transport lock is properly locked.

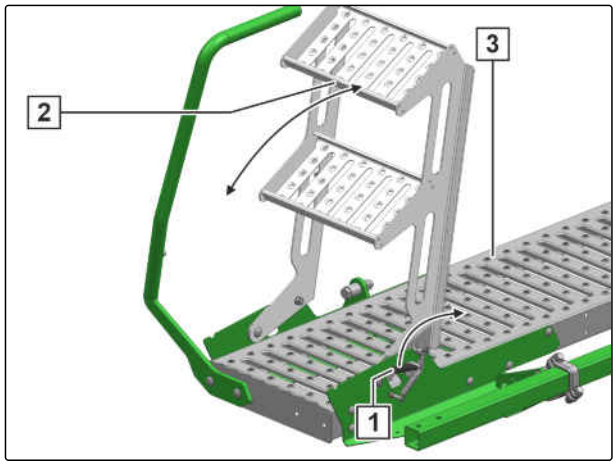

CMS-I-00004942

6.3.16 Preparing the metering unit for operation

CMS-T-00008302-A.1

6.3.16.1 Selecting setting values

CMS-T-00008305-A.1

Seed	Metering wheel	Sliding shutter position	Bottom flap position		Agitator shaft
			Thousand grain weight (TGW) less than 0.21 oz (6 g) (rapeseed), 50 oz (50 g) (cereals)	Thousand grain weight (TGW) greater than 0.21 oz (6 g) (rapeseed), 1.76 oz (50 g) (cereals)	
Rye	Coarse	Open	1	2	Driven
Triticale	Coarse	3/4 open	1	2	Driven
Barley	Coarse	Open	1	2	Driven
Wheat	Coarse	3/4 open	1	2	Driven
Spelt	Coarse	Open	2		Driven
Oats	Coarse	Open	2		Driven
Rapeseed	Fine	3/4 open	1	2	Standstill
Caraway	Fine	3/4 open	1		Standstill
Mustard / fodder radish	Fine	3/4 open	1		Standstill
Phacelia	Coarse/fine	3/4 open	1		Driven
Turnips	Fine	3/4 open	1		Standstill
Grass	Coarse	Open	2		Driven
Beans, small (TGW > 14.11 oz (400 g)	Coarse	3/4 open	4		Driven
Beans, large (TGW up to 21.16 oz (600 g))	Beans	3/4 open	3		Driven
Beans, large (TGW < 21.16 oz (600 g))	Beans	3/4 open	4		Driven
Peas (TGW to 15.52 oz (440 g)	Coarse	3/4 open	4		Driven
Peas (TGW < 15.52 oz (440 g))	Coarse	3/4 open	4		Driven
Flax (dressed)	Coarse	3/4 open	1		Driven
Millet	Coarse	3/4 open	1		Driven

Seed	Metering wheel	Sliding shutter position	Bottom flap position		Agitator shaft
			Thousand grain weight (TGW) less than 0.21 oz (6 g) (rapeseed), 50 oz (50 g) (cereals)	Thousand grain weight (TGW) greater than 0.21 oz (6 g) (rapeseed), 1.76 oz (50 g) (cereals)	
Lupines	Coarse	3/4 open	4		Driven
Lucerne	Coarse/fine	3/4 open	1		Driven
Oilseed (wet dressed)	Coarse/fine	3/4 open	1		Standstill
Red clover	Fine	3/4 open	1		Standstill
Soya	Coarse	3/4 open	4		Driven
Sunflower	Coarse	3/4 open	2		Driven
Vetches	Coarse	3/4 open	2		Driven
Rice	Coarse	3/4 open	3		Driven

1. The table provides information on the metering wheel depending on the spreading material.

2. *To mount the desired metering wheel,*
   see section *"Changing the metering wheel"*.

3. *To perform the calibration,*
   see *"Calibrating the metering unit"*.

6.3.16.2 Mounting bean metering wheels

CMS-T-00008537-A.1

6.3.16.2.1 Removing the seeding shaft halves

CMS-T-00011816-A.1

6.3.16.2.1.1 Removing the seeding shaft half that is driven via the coupling

CMS-T-00008538-A.1

1. Use the lever **2** to set the bottom flap to scale value 8.

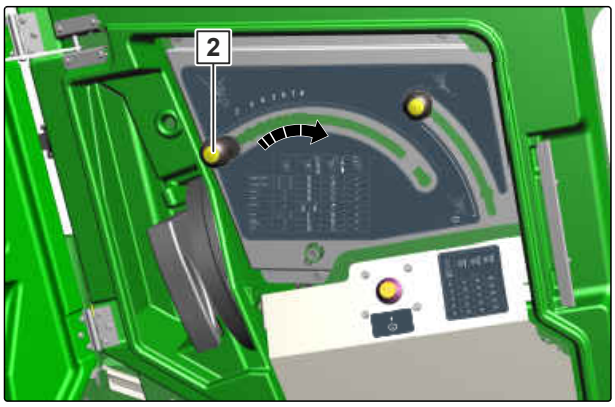

CMS-I-00005745

2. Fit the universal operating tool 3 on the locking mechanism 2.

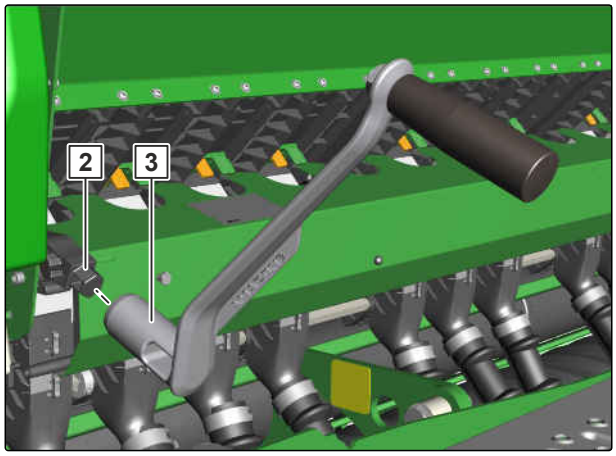

CMS-I-00005742

3. *To open the locking mechanism:*
   Move the universal operating tool 2 upwards.

➡ The metering unit cover 1 can be opened.

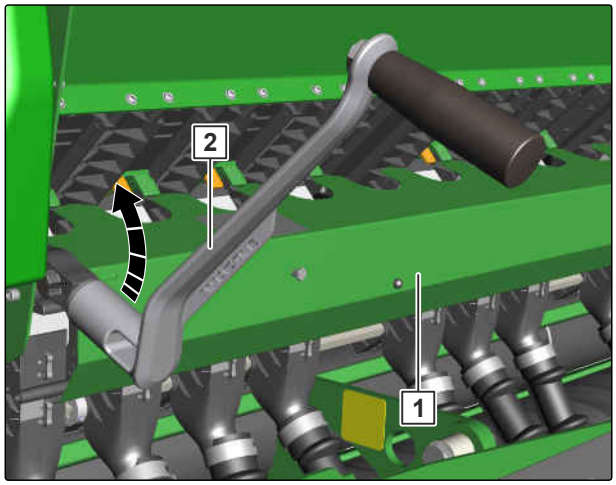

CMS-I-00005740

4. Open the lay shaft bearing 1.

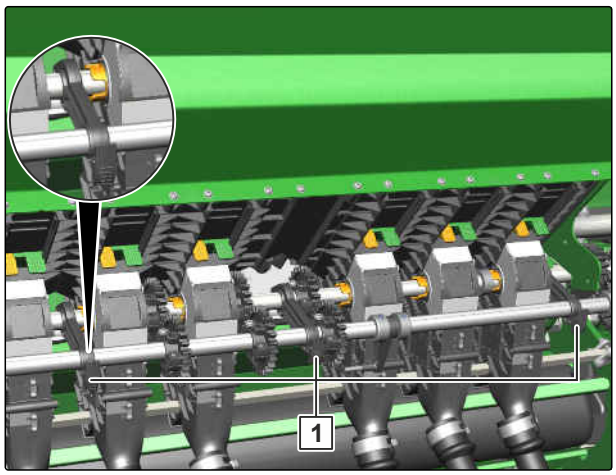

CMS-I-00005651

5. Swing down the lay shaft 1.

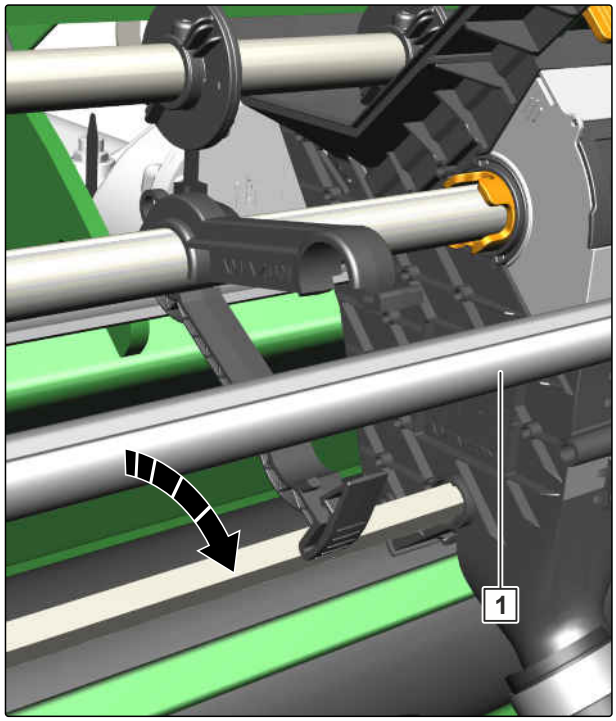

CMS-I-00005652

6. Unscrew the bolt 2 on the gear wheels and on the seeding shaft 1.

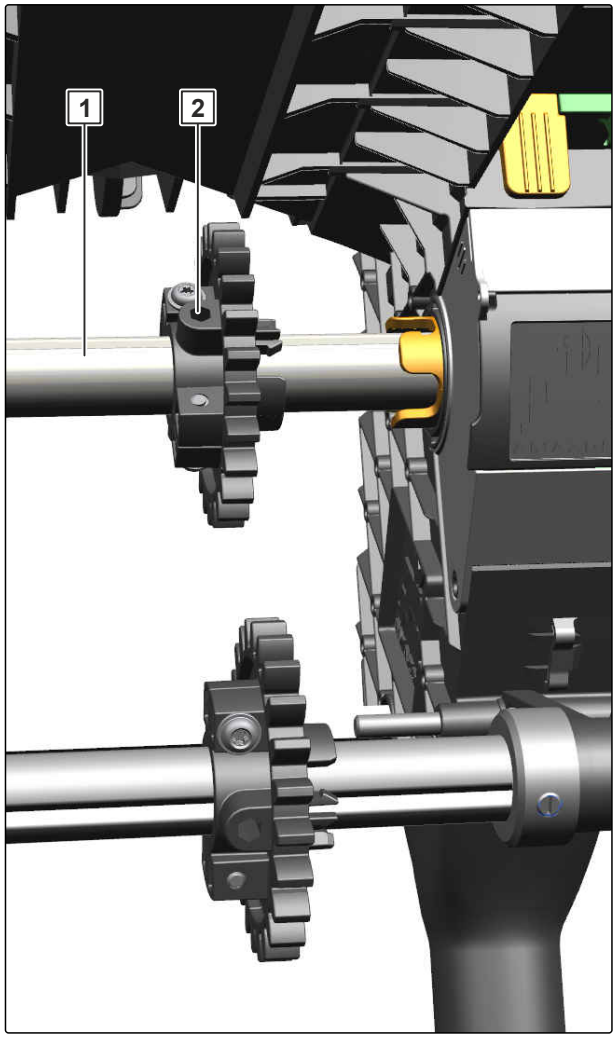

CMS-I-00005744

7. Unscrew the bolts on the adjusting rings and on the seeding shaft coupling.

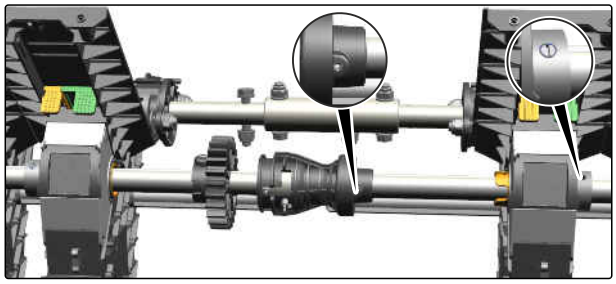

CMS-I-00005819

8. Fit the universal operating tool [1] on the locking mechanism [2].

9. *To unlock the cover of the chain drive:*
Turn the universal operating tool clockwise.

➡ The cover of the chain drive can be opened.

CMS-I-00005741

10. Take off the tension spring [1].

11. Swing down the chain idler sprocket [3].

12. Remove the drive chain [2].

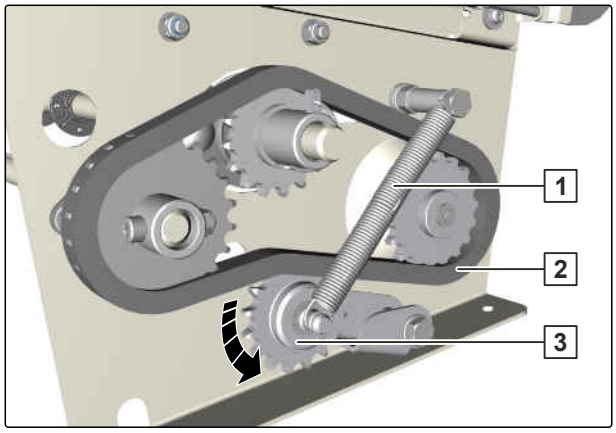

CMS-I-00005724

13. Unscrew bolt [1].

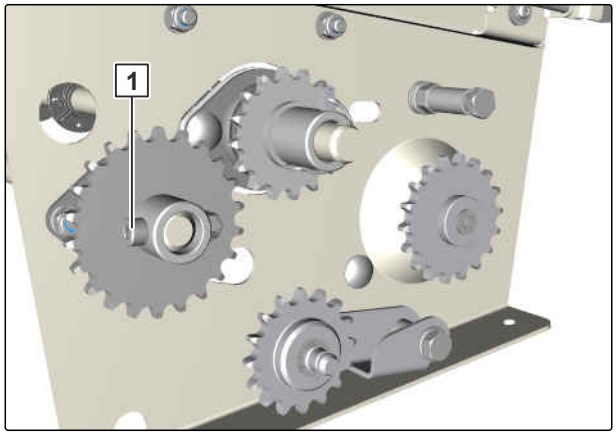

CMS-I-00005749

14. Dismount bolt 2 and nut 1.

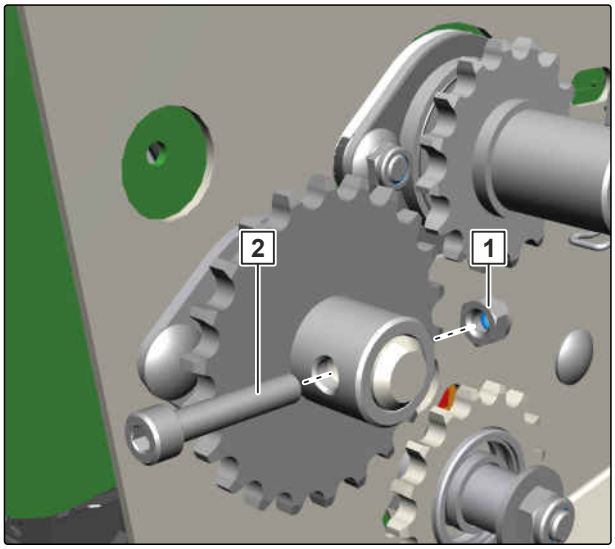

CMS-I-00005748

15. Take the gear wheel 1 off of the seeding shaft 2.

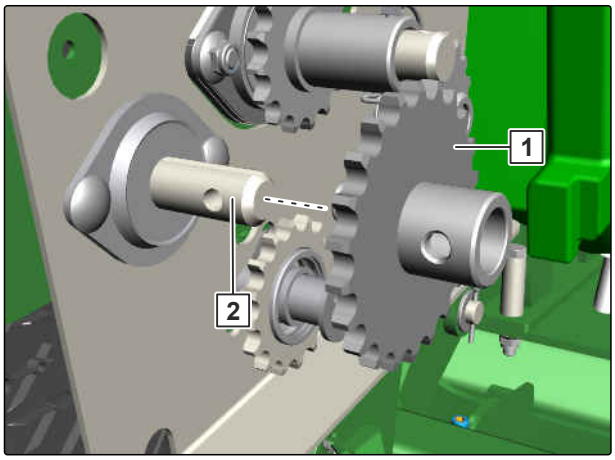

CMS-I-00005747

NOTE

When pulling out the seeding shaft half, ensure that the adjusting rings or coupling parts do not fall into the implement.

16. Pull out the seeding shaft 1.

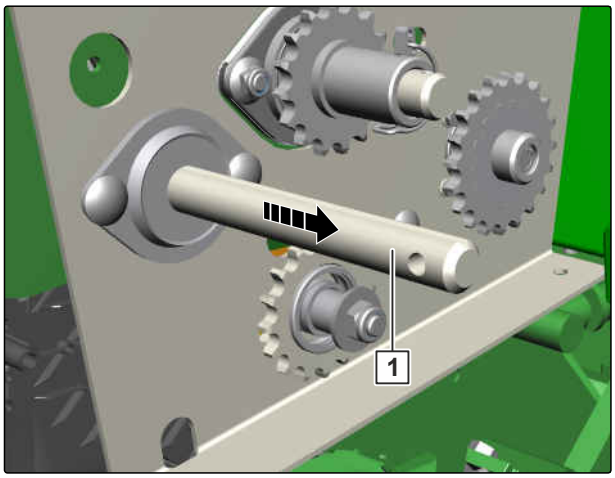

CMS-I-00005743

6.3.16.2.1.2 Removing a seeding shaft driven via electric motor

CMS-T-00008539-A.1

1. Use the lever [2] to set the bottom flap to scale value 8.

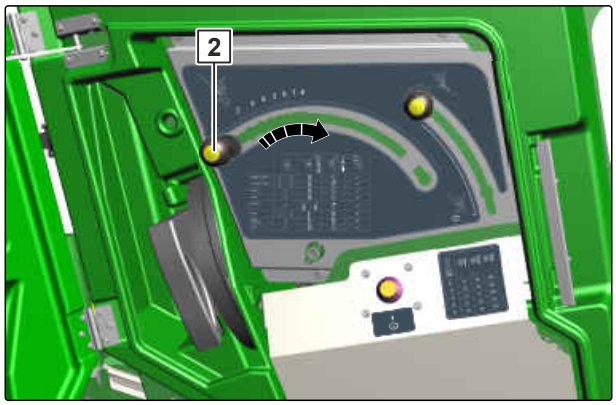

CMS-I-00005745

2. Fit the universal operating tool [3] on the locking mechanism [2].

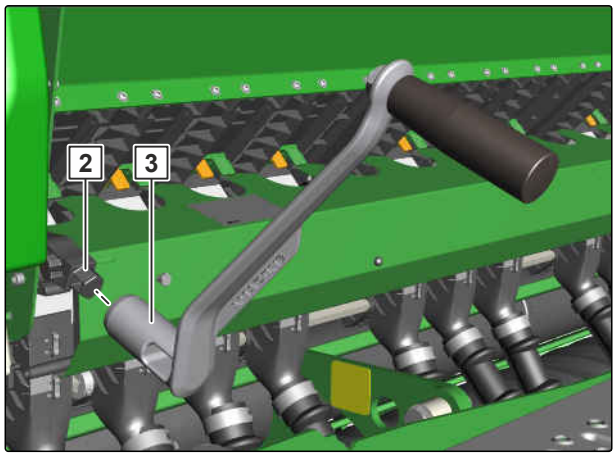

CMS-I-00005742

3. *To open the locking mechanism:*
   Move the universal operating tool [2] upwards.

➡ The metering unit cover [1] can be opened.

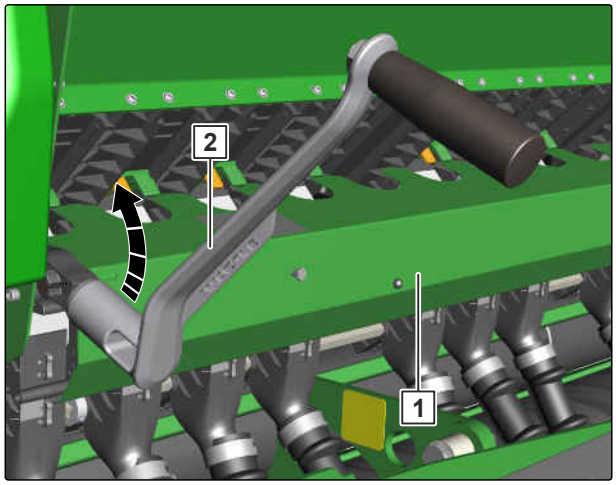

CMS-I-00005740

4. Open the lay shaft bearing 1.

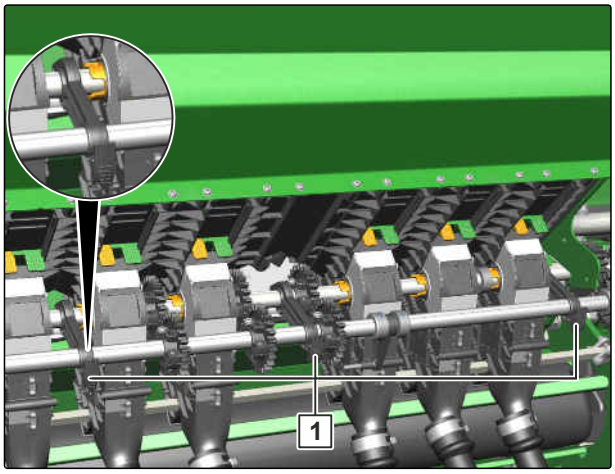

CMS-I-00005651

5. Swing down the lay shaft 1.

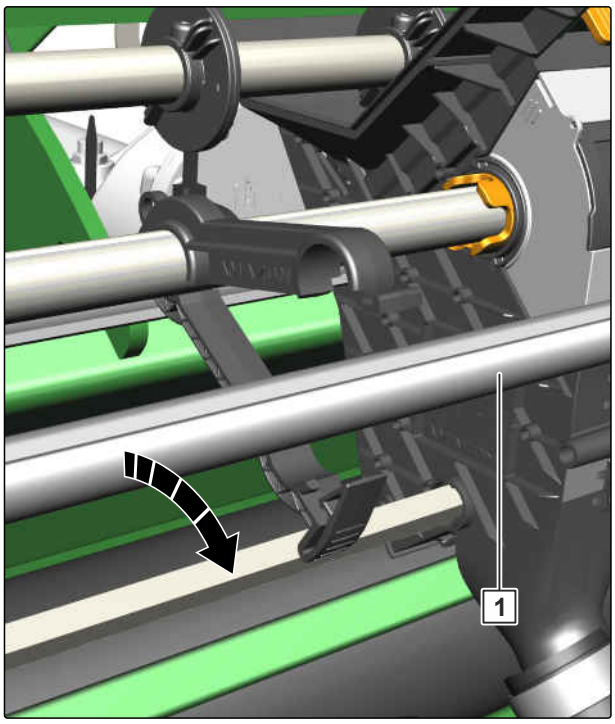

CMS-I-00005652

6. Unscrew the bolt **2** on the gear wheels and on the seeding shaft **1**.

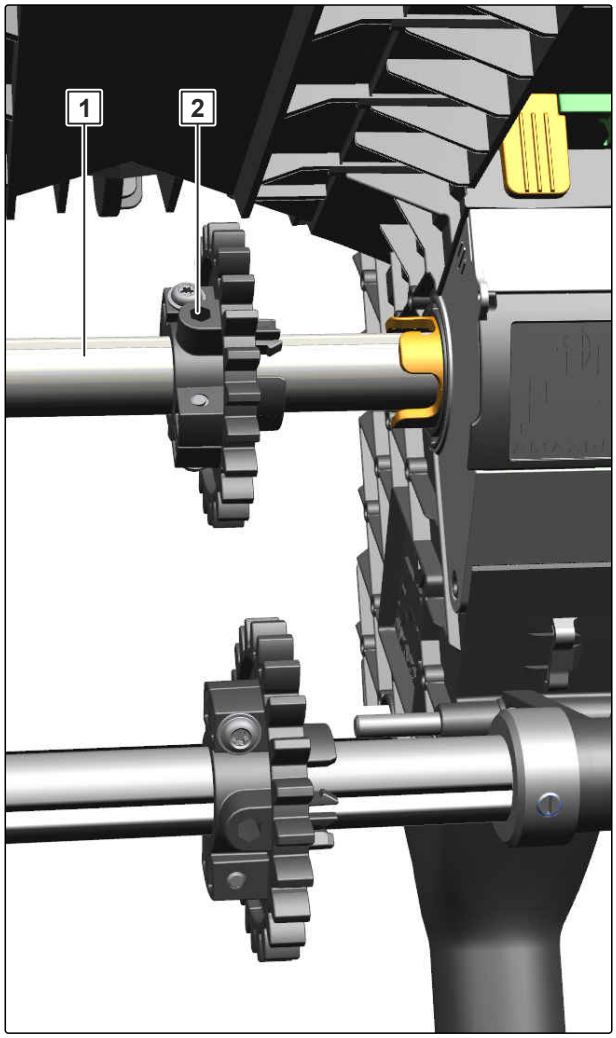

CMS-I-00005744

7. Unscrew the bolt **1** on the seeding shaft coupling.

8. Unscrew the bolt **1** on the adjusting ring.

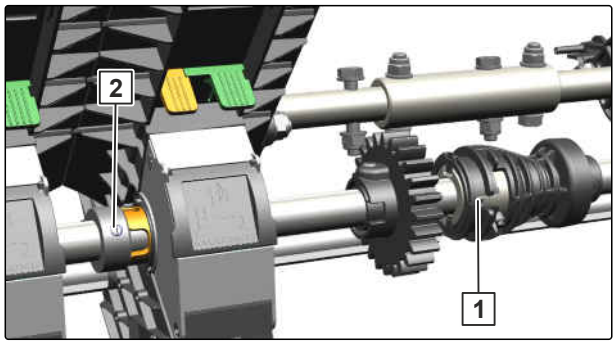

CMS-I-00005794

9. Unscrew the bolt 1 on the adjusting ring behind the SmartCenter.

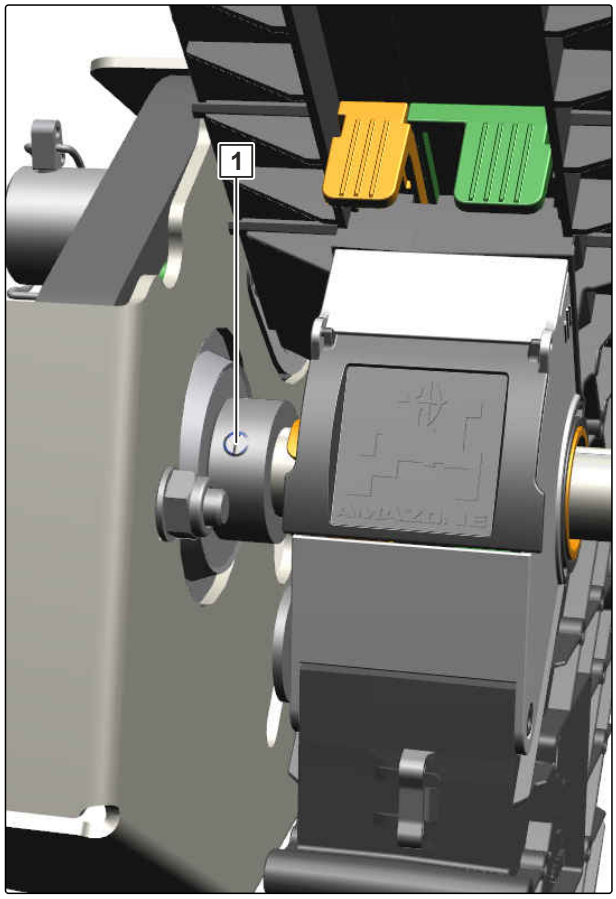

CMS-I-00005795

10. Fit the universal operating tool 3 on the locking mechanism 2.

11. *To unlock the cover 1 of the chain drive:*
Turn the universal operating tool clockwise.

➡ The cover of the chain drive can be opened.

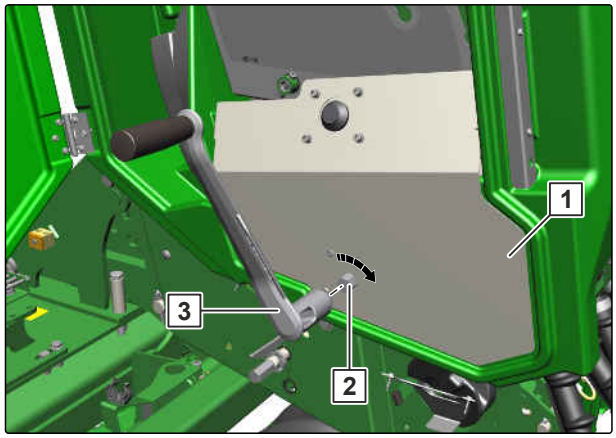

CMS-I-00005793

12. Flip up the cover 1 of the chain drive.

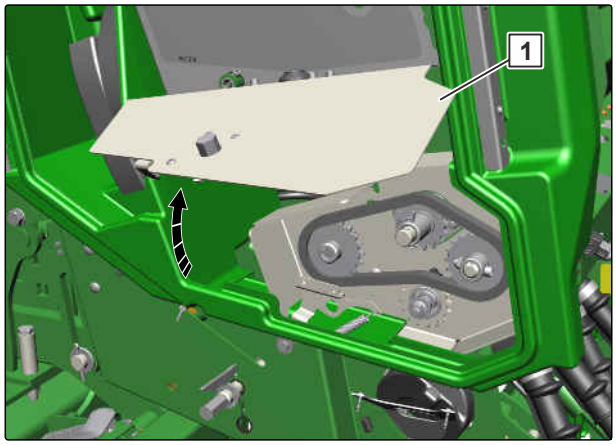

CMS-I-00005809

13. Take off the tension spring 1.
14. Swing down the chain idler sprocket 3.
15. Remove the drive chain 2.

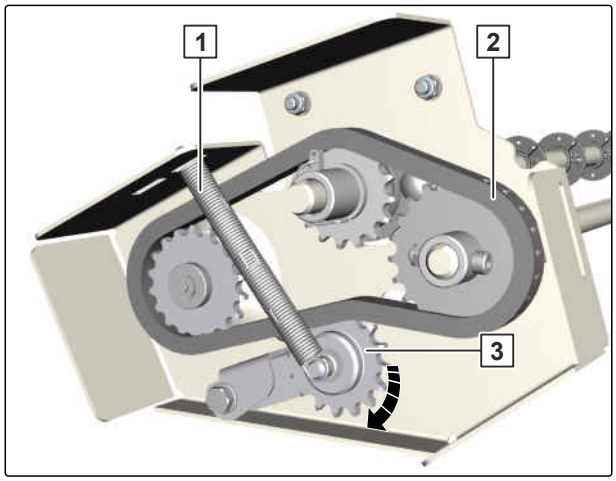

CMS-I-00005810

16. Unscrew bolt 1.

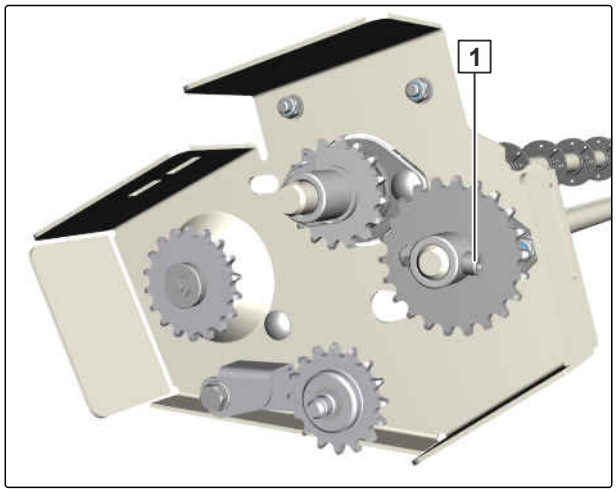

CMS-I-00005812

17. Dismount bolt 2 and nut 1.

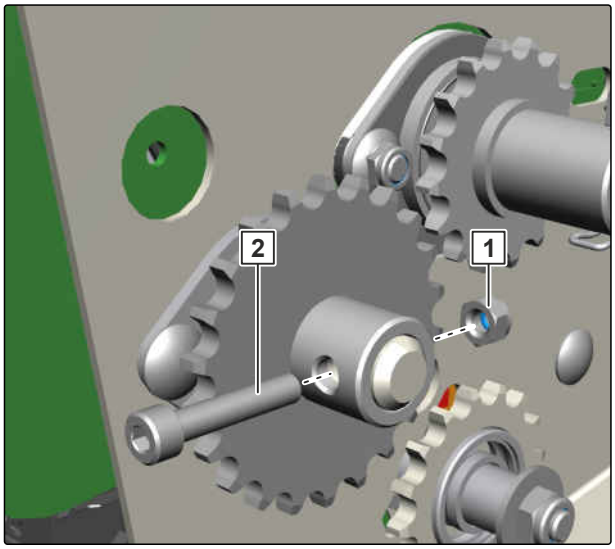

CMS-I-00005748

18. Take the gear wheel 1 off of the seeding shaft 2.

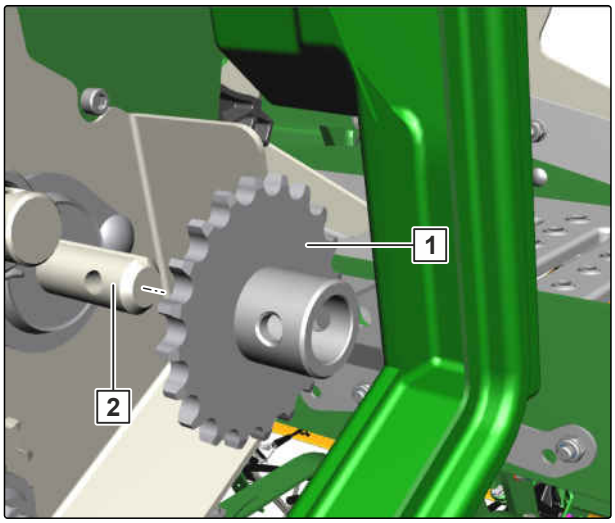

CMS-I-00005813

NOTE

When pulling out the seeding shaft half, ensure that the adjusting rings or coupling parts do not fall into the implement.

19. Pull out the seeding shaft 1.

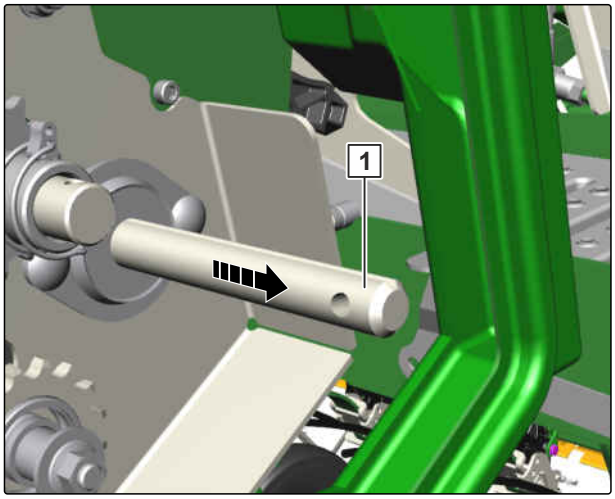

CMS-I-00005814

6.3.16.2.2 Inserting the bean metering wheel

CMS-T-00008567-B.1

1. *To open the metering unit cover* **1**:
   Slightly press in the metering wheel cover on the sides.

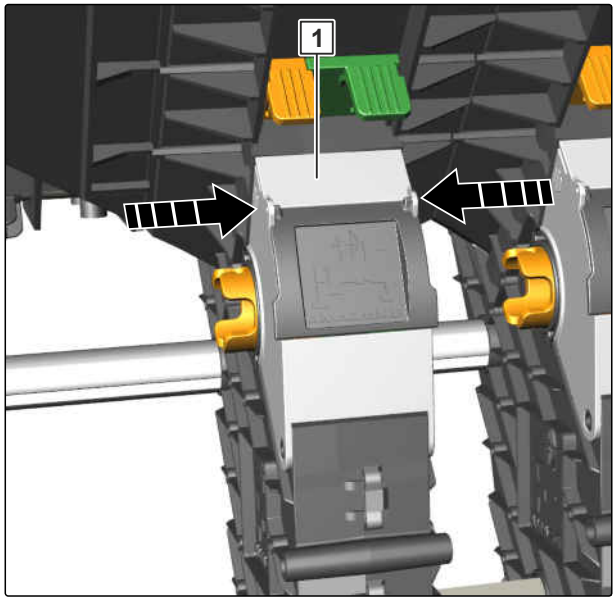

CMS-I-00005800

2. Take the fine metering wheel **2** and coarse metering wheel **1** out of the metering unit.

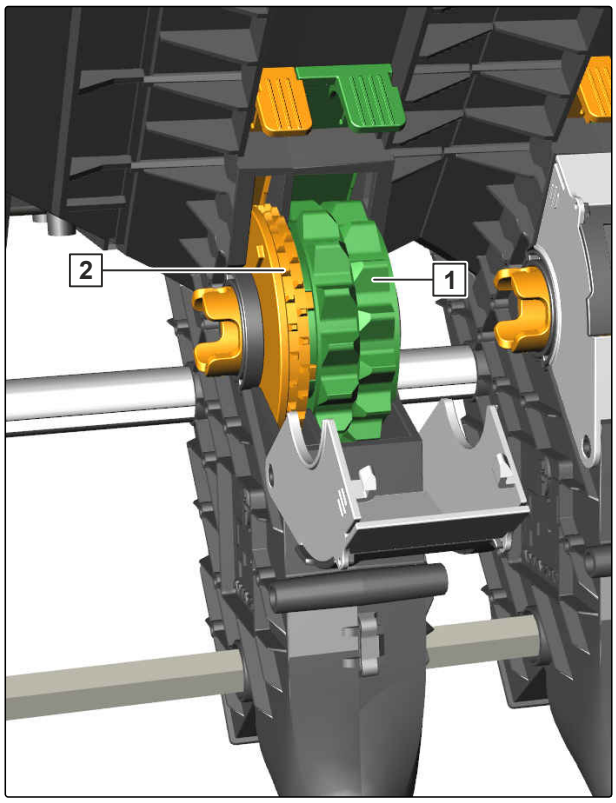

CMS-I-00005801

3. Take off the metering wheel bearing 2 and coarse metering wheel 1.

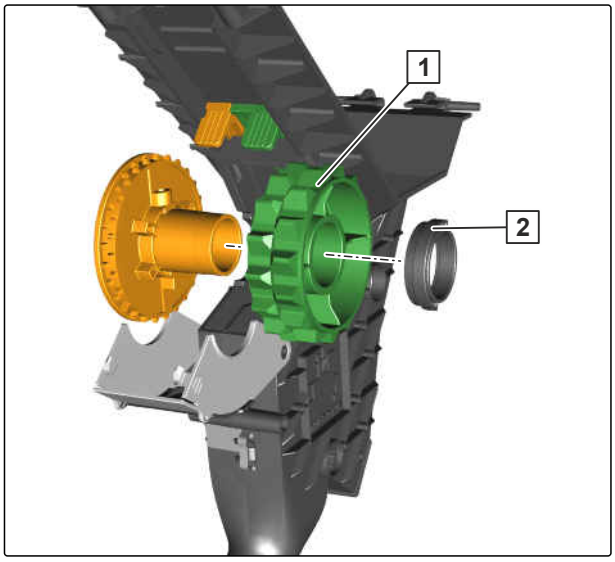

CMS-I-00005803

4. Mount the bean metering wheel 1 and metering wheel bearing 2.

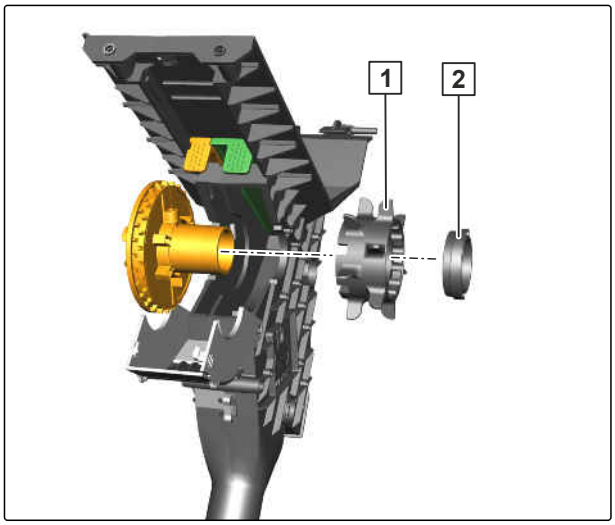

CMS-I-00005804

5. Insert the bean metering wheel 2 and fine metering wheel 1 into the seed housing.

6. Close the metering wheel cover 3.

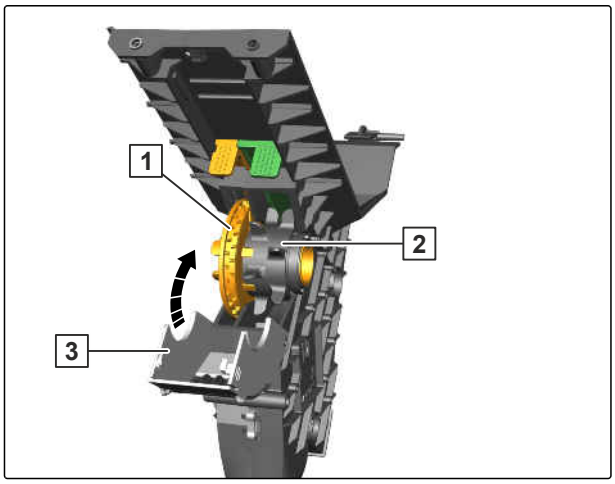

CMS-I-00005805

6.3.16.2.3 Installing the two halves of the seeding shaft

CMS-T-00008568-A.1

NOTE

When installing the seeding shaft, ensure that all adjusting rings, gear wheels, and coupling parts are positioned in their original places.

1. Install the seeding shaft 1.

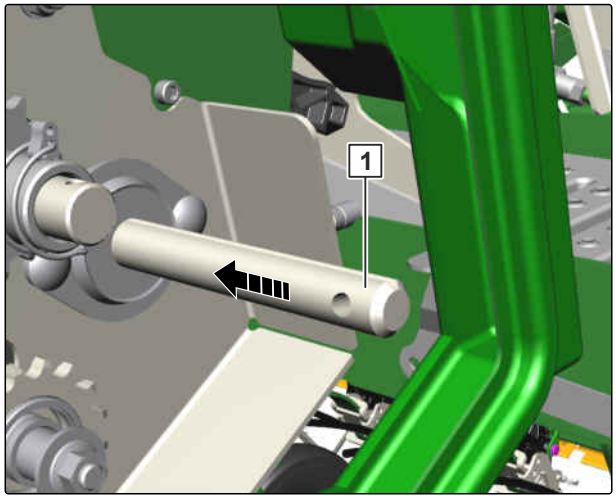

CMS-I-00005815

2. Fit the gear wheel 1 onto the seeding shaft 2.

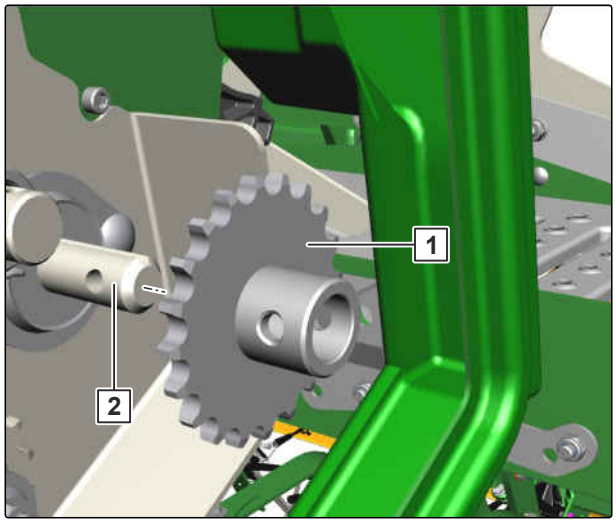

CMS-I-00005813

3. Mount bolt 2 and nut 1.

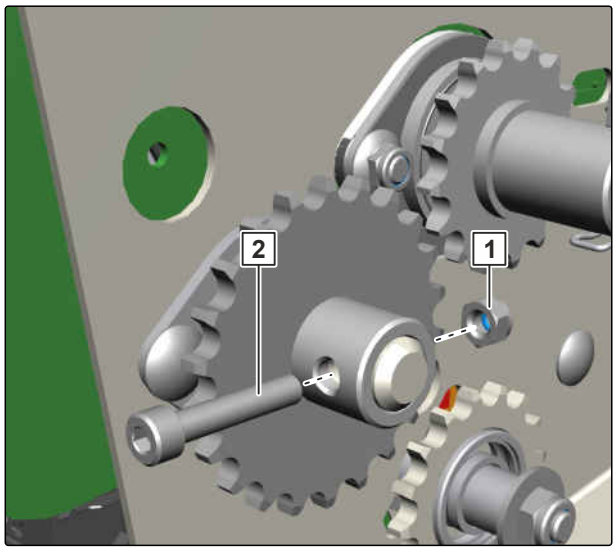

CMS-I-00005748

4. Tighten the bolt 1.

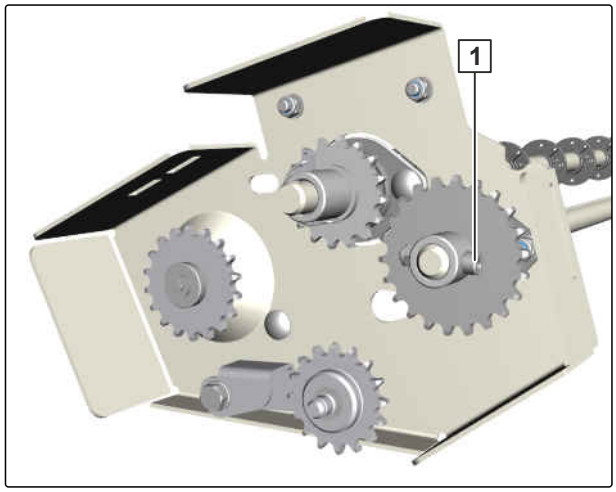

CMS-I-00005812

5. Put on the drive chain 2.
6. Swing up the chain idler sprocket 3.
7. Attach tension spring 1.
8. Close the cover of the chain drive.

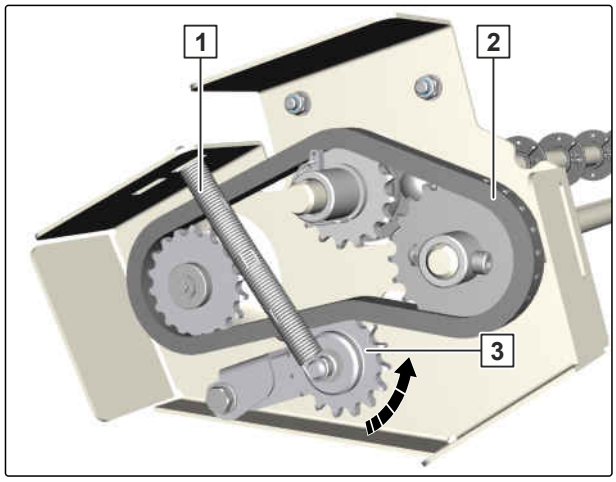

CMS-I-00006263

9. Tighten the bolts on the adjusting rings.

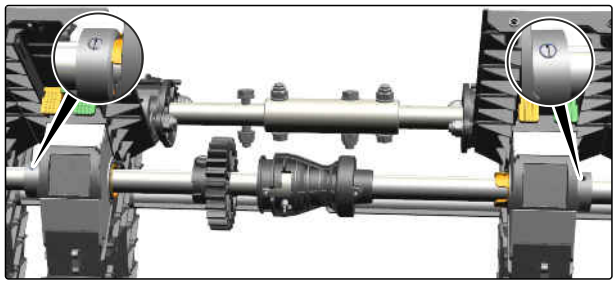

CMS-I-00005746

10. Tighten the bolt **2**.

11. Tighten the bolt **1**.

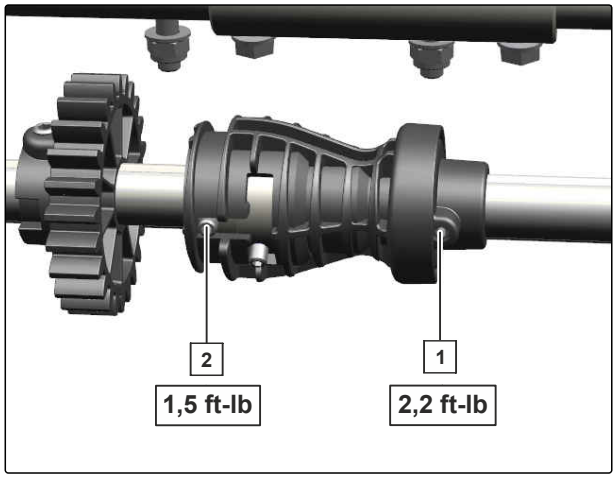

CMS-I-00005863

12. Tighten the bolt **1** on the adjusting ring behind the SmartCenter.

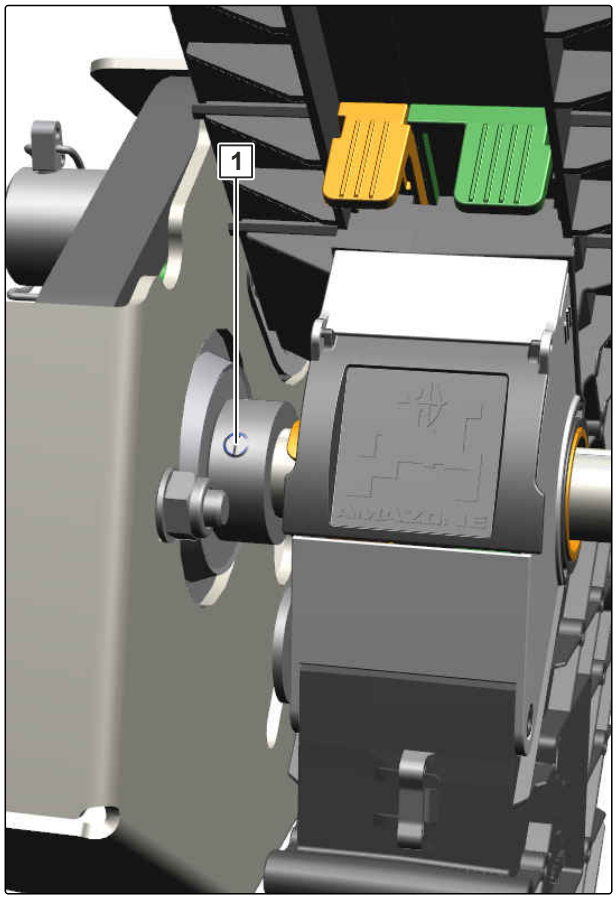

CMS-I-00005795

13. Tighten the bolt 2 on the gear wheels on the seeding shaft 1.

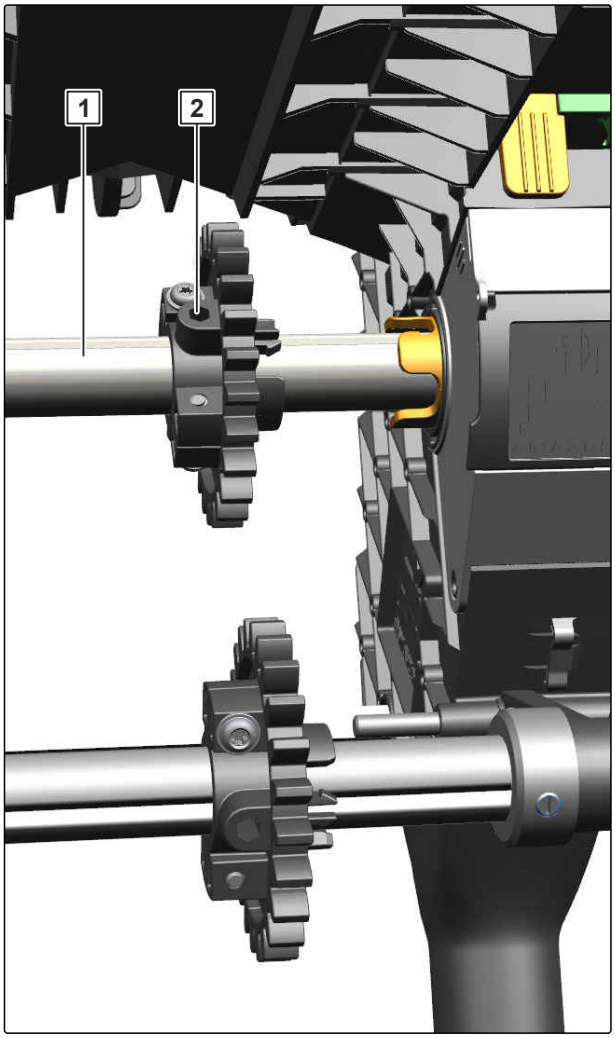

CMS-I-00005744

14. Swing up the lay shaft 1.

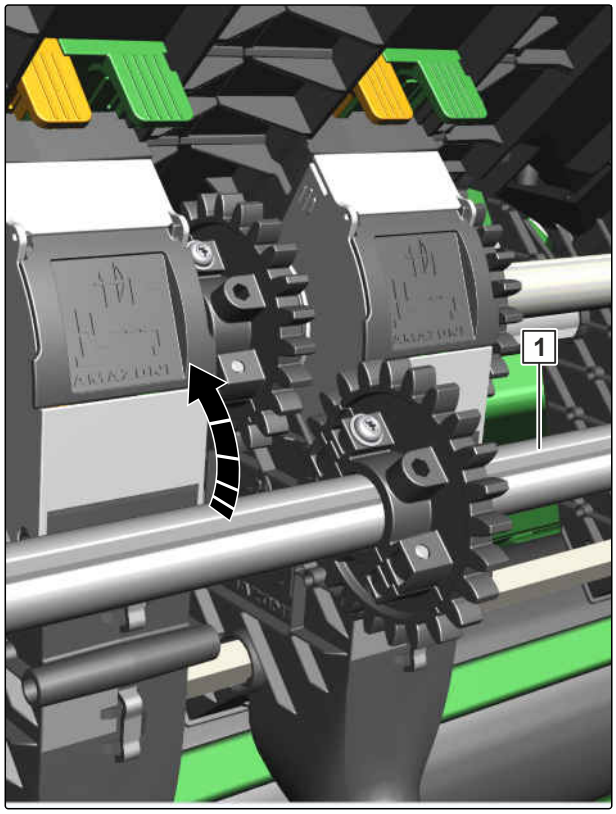

CMS-I-00005660

15. Close the lay shaft bearing 1.

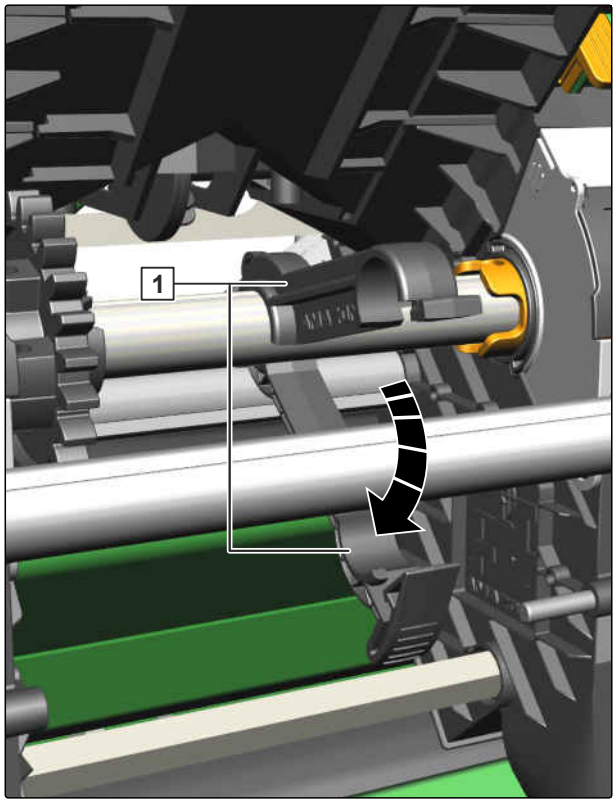

CMS-I-00005661

16. Attach the metering unit cover 1.

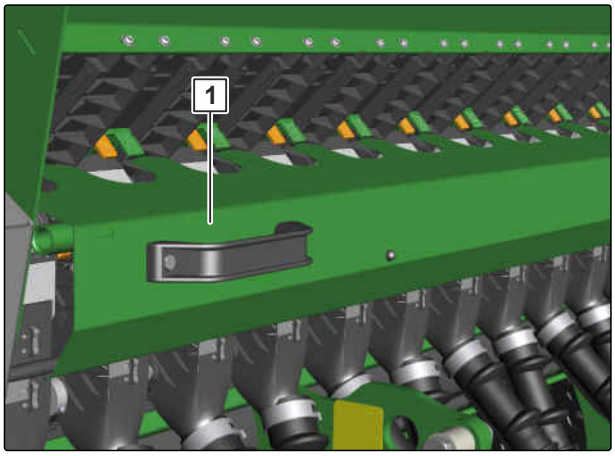

CMS-I-00006114

6.3.16.3 Adjusting the bottom flap

CMS-T-00008521-A.1

NOTE

This adjustment influences the seed rate.

Calibrate the metering unit after the adjustment.

NOTE

The bottom flap lever must always lock in place.

1. The required bottom flap position is specified in the section *"Selecting setting values"*.

2. Place the bottom flap lever 1 in the desired position.

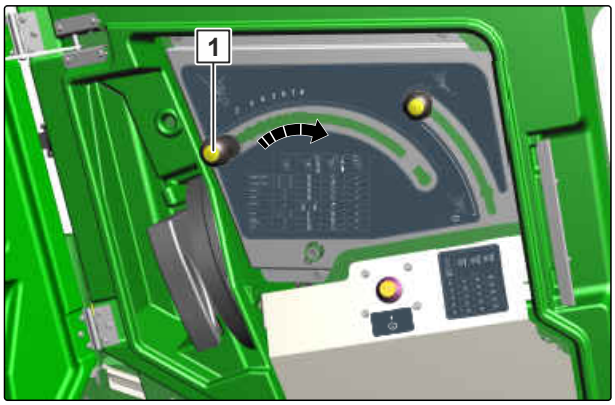

CMS-I-00005783

6.3.16.4 Adjusting the sliding shutters

CMS-T-00008518-A.1

▶ *For seeding with coarse metering wheels or bean metering wheels:*
Set the coarse metering wheel sliding shutter **1** to the desired position and close the fine metering wheel sliding shutter

or

For seeding with fine metering wheels:
Set the fine metering wheel sliding shutter **2** to the desired position and close the coarse metering wheel sliding shutter.

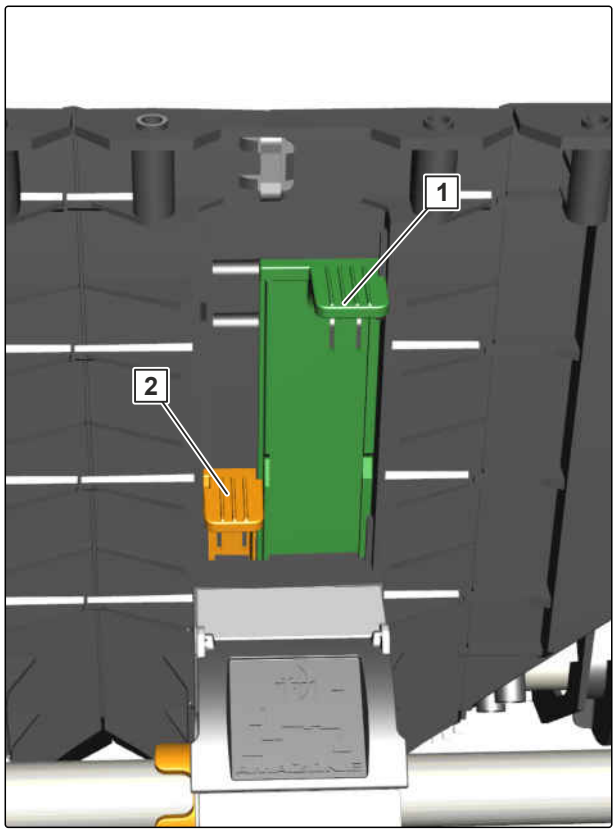

CMS-I-00005781

6.3.16.5 Adjusting the agitator shaft support

CMS-T-00008517-A.1

NOTE

This adjustment influences the seed rate.

Calibrate the seed rate after the adjustment.

1. Fit the universal operating tool **1** on the locking mechanism **2**.
2. *To unlock the cover of the chain drive:*
Turn the universal operating tool clockwise.

➡ The cover of the chain drive can be opened.

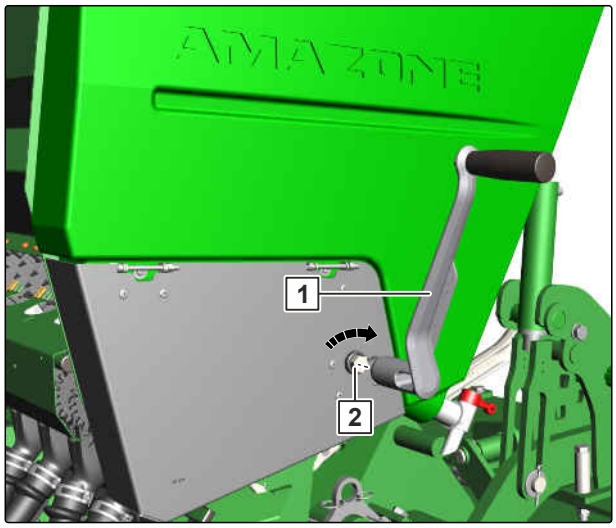

CMS-I-00005741

3. *For seeding with agitator shaft support:*
   Insert the linch pin [2] in the hollow drive shaft [1] and secure it.

   or

   For seeding without agitator shaft support:
   Insert the linch pin [2] in the agitator shaft [3] and secure it.

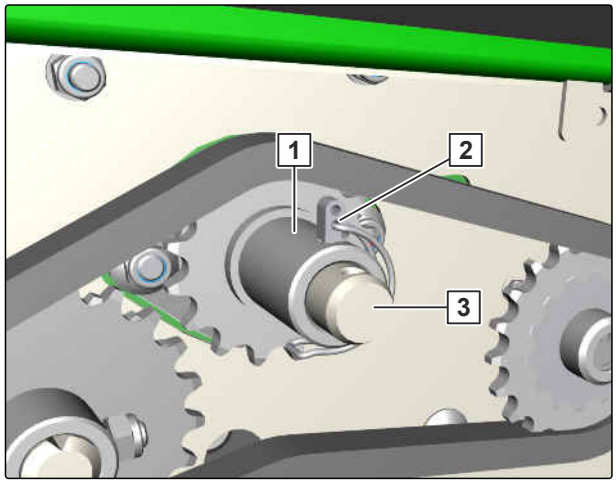

CMS-I-00005778

6.3.16.6 Calibrating the metering unit

CMS-T-00008303-A.1

1. *To select the correct bottom flap position for calibration:*
   Read-out the bottom flap position from the table [1] and move the lever [2] to the desired position.

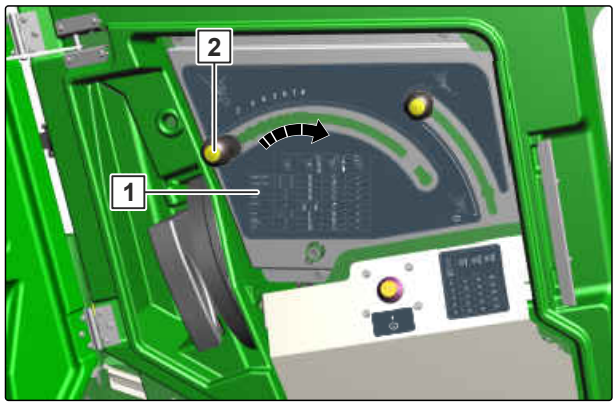

CMS-I-00005714

2. Pull out the calibration trough [1].

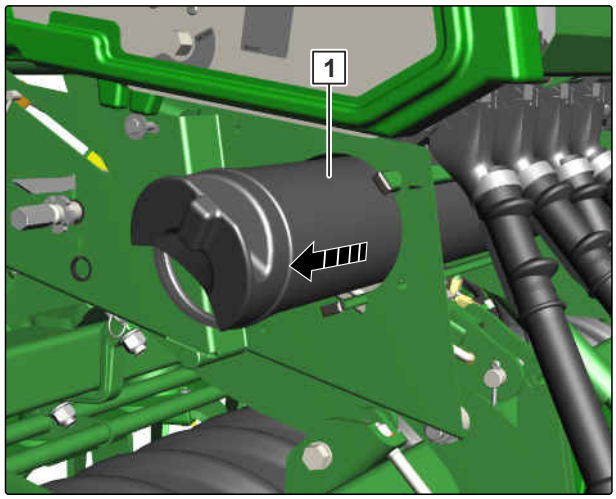

CMS-I-00005707

3. *To collect the seed in the calibration trough* **1**:
   Turn the calibration trough with the opening facing up.

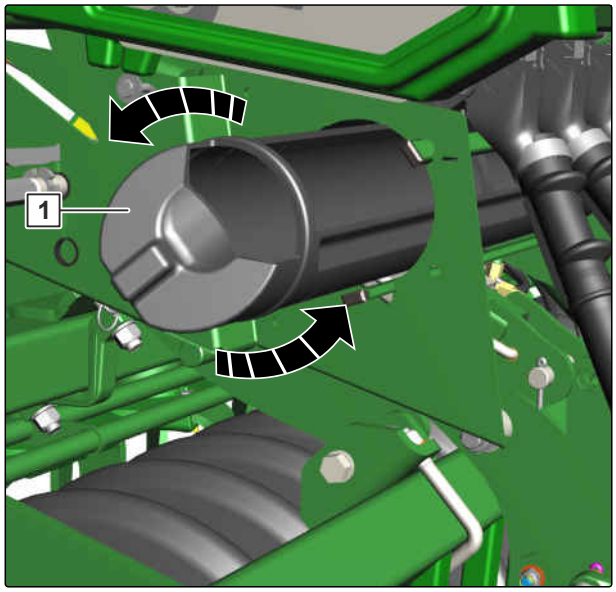

CMS-I-00005708

4. Retrace in the **1** calibration trough.

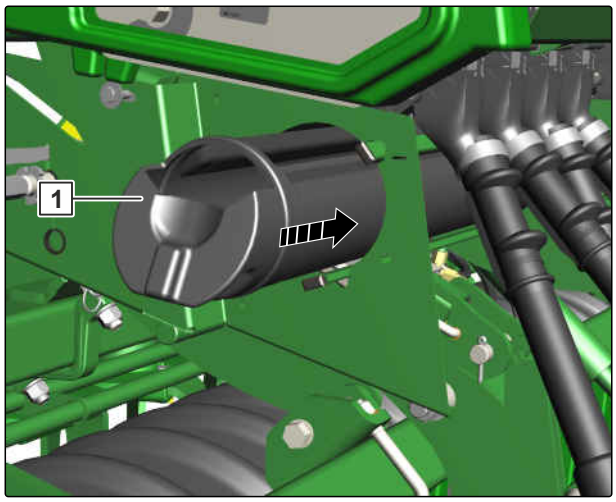

CMS-I-00005709

5. *To route the seed into the calibration trough:*
   Bring the calibration lever **1** into the end position beyond the catch.

6. Push the calibration lever back and let it engage in calibration position.

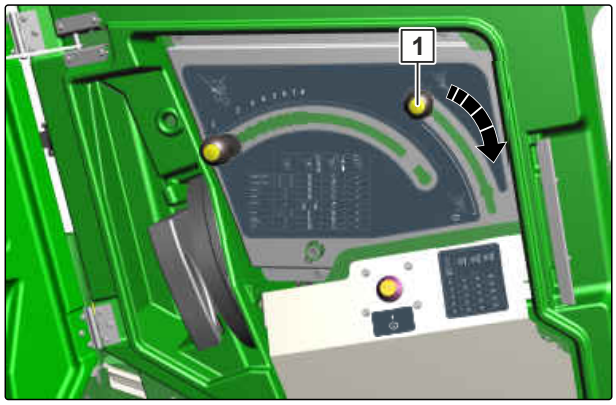

CMS-I-00005715

7. Refer to Table 2 for the volume of the metering wheels.

8. *To start calibration via the calibration button 1 or the TwinTerminal:*
   See the ISOBUS software operating manual *"Calibrating menu"*

   or

   see operating manual *"control computer"*.

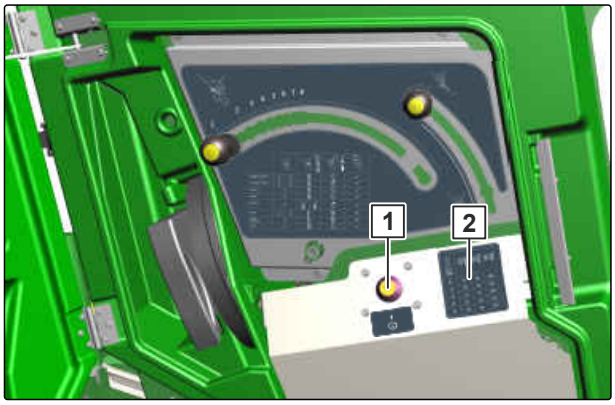

CMS-I-00005717

9. *To start calibration via the control terminal,*
   See the ISOBUS software operating manual *"Calibrating menu"*

   or

   see operating manual *"control computer"*.

10. Swing down the bracket 1 on the steps.

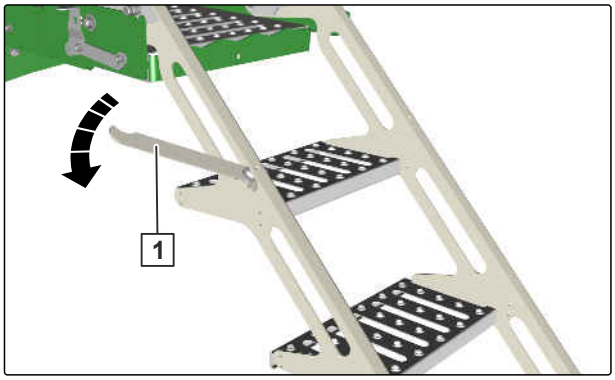

CMS-I-00005700

11. Take the scale 2 and the collapsible bucket 1 out of the SmartCenter.

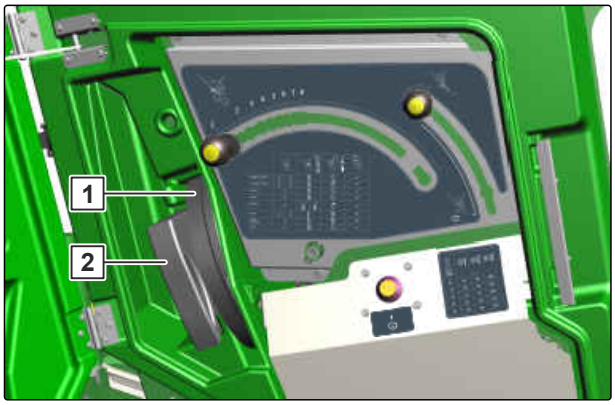

CMS-I-00005697

12. Hook the scale 2 onto the bracket 1 of the steps.

13. *To weigh the collected seed from the calibration trough:*
    Hook the collapsible bucket 3 onto the scale and pour in seed.

Usually, the desired seed rate is not reached at first calibration. The achieve the desired seed rate, the calibration must be repeated several times.

14. *To enter the weight of the collected seed on the TwinTerminal, control terminal or control computer:*
    See the ISOBUS software operating manual *"Calibrating menu"*

    or

    see operating manual *"control computer"*.

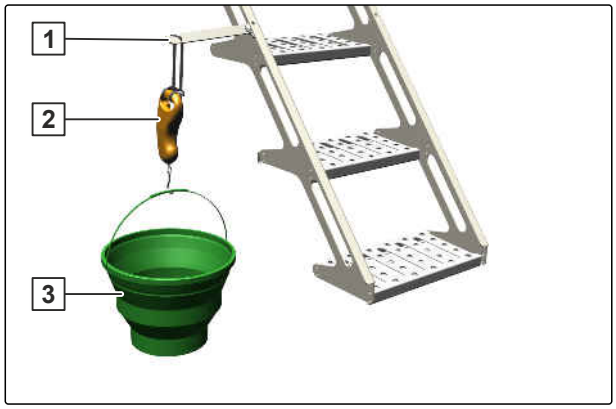

CMS-I-00005716

6.4 Preparing the implement for road travel

CMS-T-00008412-A.1

6.4.1 Folding the tramline marker on the implement frame

CMS-T-00004422-B.1

1. *To ensure the track disk comes off the ground,* slightly lift-out the implement.

2. Remove the pin 1 from the pegging hole 3.

3. Bring the swivel arm 4 into transport position.

4. Peg the swivel arm in transport position 2.

5. *To secure the pin in the adjuster segment,* Turn the pin downwards.

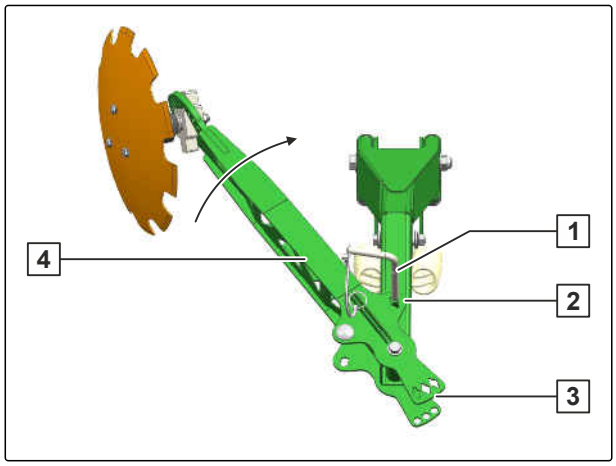

CMS-I-00003216

6.4.2 Folding the tramline marker on the exact following harrow

CMS-T-00007448-C.1

NOTE

In order to bring tramline marker into transport position, tramlines must not be created on the control terminal or on the control computer.

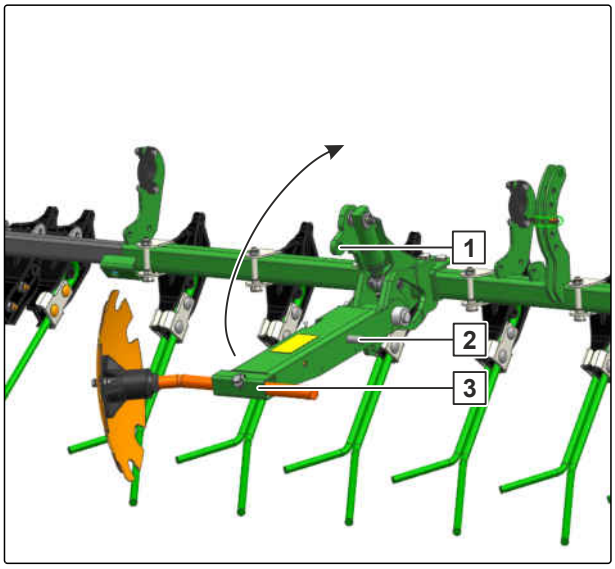

CMS-I-00005176

1. *To deactivate tramline control:*
   See the ISOBUS software operating manual

   or

   see operating manual control computer.

2. *To lift the tramline marker off the ground:*
   Activate the *"yellow 1"* tractor control unit.

➡ The tramline marker is hydraulically lifted-out and can be brought into transport position.

3. Lift the track disk carrier **3**.

4. Peg the track disk carrier in the transport holder **1** with pins **2**.

6.4.3 Bringing the exact following harrow or seed harrow into transport position

CMS-T-00006417-B.1

The outer harrow elements can exceed the permissible transport width in road transport. To avoid exceeding the permitted transport width, the exact following harrow or seed harrow must be brought into transport position before road transport.

1. Unscrew the bolt 2 with the universal operating tool.
2. Push the sliding element 1 into the carrier tube 3 up to the stop.
3. Tighten the bolt 2 with the universal operating tool.
4. Make the same adjustment on the other side of the implement.

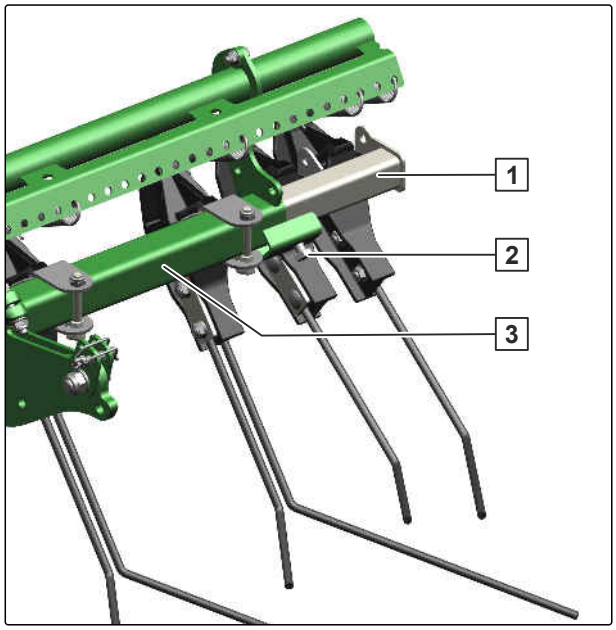

CMS-I-00004675

6.4.4 Attaching the road safety bars on the exact following harrow

CMS-T-00007449-D.1

1. Remove coarse contaminants from the tines.
2. Slide the road safety bars 1 over the tines.
3. Secure the road safety bars with the tensioners 2.
4. Check for firm seat.
5. *If the tensioners do not provide enough tension,* guide the tensioners through the tine coils.

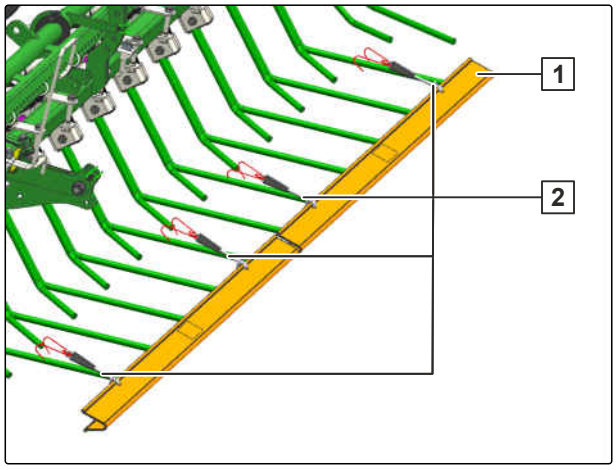

CMS-I-00005185

6.5 Calculating the permissible payload

CMS-T-00007536-B.1

WARNING

Risk of accident due to exceeded payload

If the payload is exceeded, this can result in implement damage or/and uncontrolled driving behavior of the tractor.

- Carefully determine the payload of the implement.
- Never exceed the specified payload of the implement.

Maximum payload = maximum permissible implement weight – tare weight

1. Read off the permissible technical implement weight from the rating plate.

2. *To obtain the tare weight,*
   Weigh the implement with the hopper empty.

3. Calculate the payload.

Using the implement

7

CMS-T-00008413-A.1

7.1 Removing the road safety bars

CMS-T-00011601-A.1

1. Remove the road safety bars 1 from the exact following harrow.

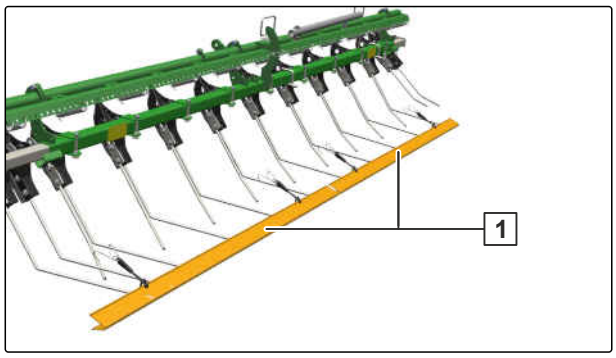

CMS-I-00007544

2. Turn the road safety bars 2 by 180°; place them on top of each other on the holders 1.

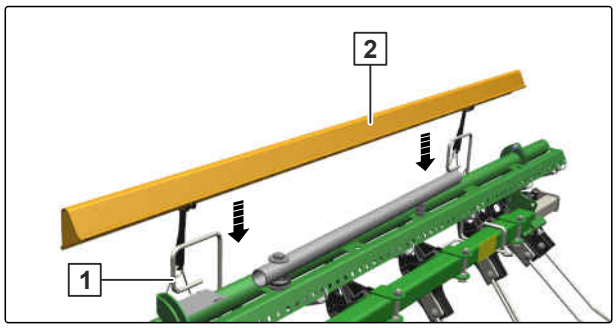

CMS-I-00007545

3. *To fix the road safety bar in place:*
   Tension the hook 1 and fasten it on the holder 2.

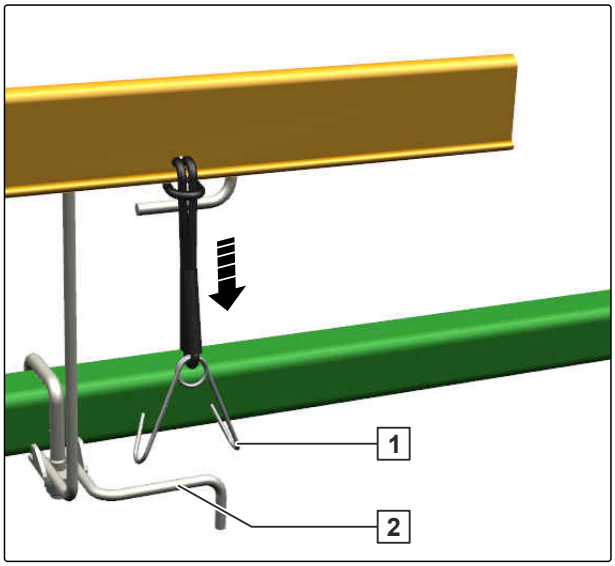

CMS-I-00007546

7.2 Bringing the exact following harrow or seed harrow into working position

CMS-T-00006334-D.1

The roller and the coulters press the soil far to the outside differently depending on forward speed and soil condition. The outer harrow elements must be adjusted such that the soil is guided back and a trackless seedbed is created. The greater the forward speed, the further the outer harrow elements must be set outwards.

1. Unscrew the bolt 2 with the universal operating tool.
2. Push the sliding element 1 outward.
3. Tighten the bolt 2 with the universal operating tool.
4. Make the same adjustment on the other side of the implement.
5. *To check the adjustment:*
   Sow 98.43 ft (30 m) at working speed and check the work pattern.

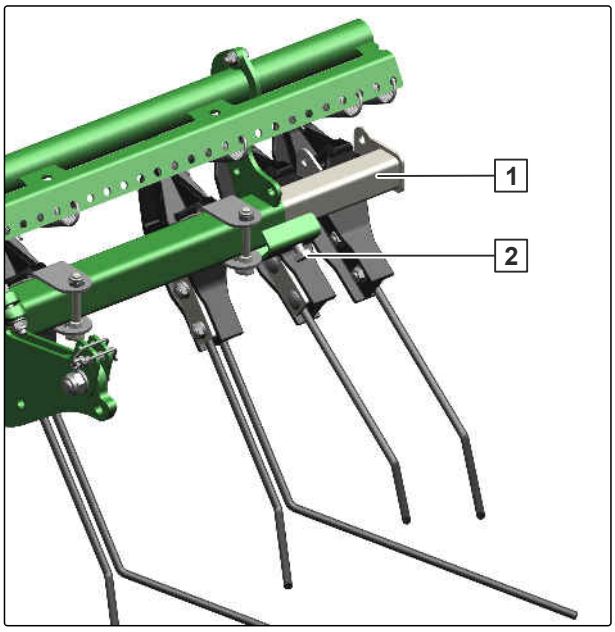

CMS-I-00004674

7.3 Unfolding the tramline marker

CMS-T-00011850-A.1

7.3.1 Unfolding the tramline marker on the implement frame

CMS-T-00011851-A.1

1. Remove the pin 1 from the pegging hole 3.
2. Bring the swivel arm 2 into working position.
3. Insert the pin in the middle hole.
4. *To secure the pin in the adjuster segment:*
   Turn the pin downwards.

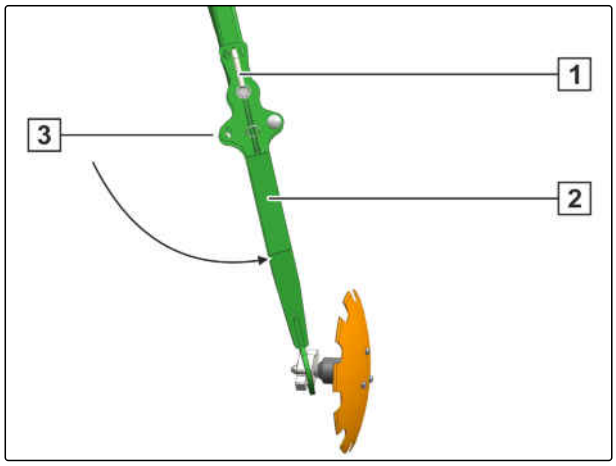

CMS-I-00003168

7.3.2 Unfolding the tramline marker on the harrow frame

CMS-T-00010990-A.1

1. Park the implement on the field.
2. Firmly grasp the track disk carrier 1.
3. Bring the *"yellow"* tractor control unit into neutral position.
4. Pull out the pin 2.
5. Bring the *"yellow"* tractor control unit into float position.

➡ The tramline marker folds into working position.

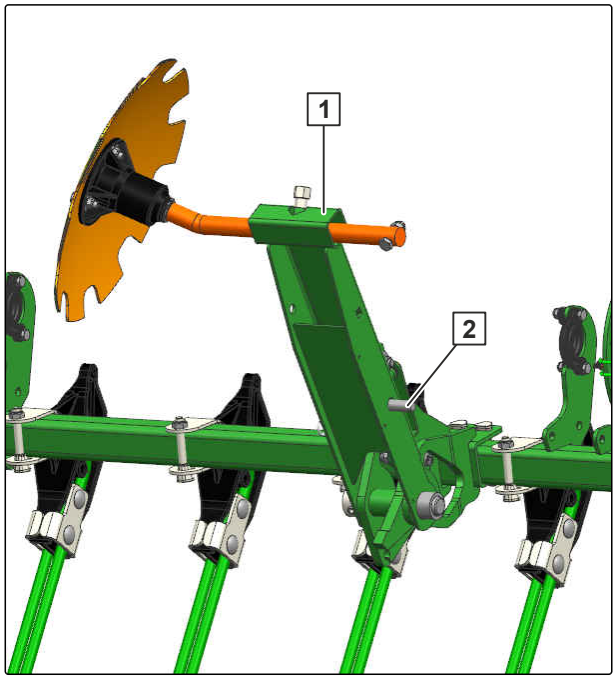

CMS-I-00005174

7.4 Using the implement

CMS-T-00008414-A.1

1. Align the implement parallel to the ground.
2. Lower the implement onto the field.

3. Bring the hydraulics of the 3-point power lift into float position.

4. Switch on the tractor PTO shaft. Slowly couple the tractor PTO shaft; only at idle or at a low tractor engine speed.

5. *To check the adjustment of the implement:*
   Sow 98.43 ft (30 m) at working speed and check the work pattern.

NOTE

Make use of an implement standstill, e.g. after loading with seed, to perform a visual check of the implement:

- Placement depth
- Coulters
- Metering unit

7.5 Checking the placement depth

CMS-T-00004517-D.1

1. Remove the fine soil 1 over the seed 2.

2. Determine the placement depth 3.

3. Cover the seed with fine soil again.

4. Check the placement depth in several places in a longitudinal and transverse direction relative to the implement.

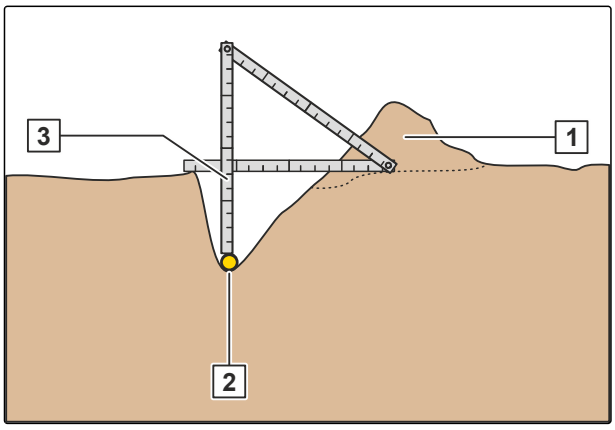

CMS-I-00003257

7.6 Turning on headlands

CMS-T-00008416-A.1

NOTE

When the implement is lifted, the metering unit is switched off.

1. *To prevent transverse loads when turning on headlands,*
   Lift out the implement.

2. *To prevent implement damage:*
   Pay attention to obstacles when turning.

3. *If the direction of the implement is the same as the direction of travel:*
   Lower the implement.

Rectifying faults

8

CMS-T-00008432-A.1

Errors	Cause	Solution
TwinTeC coulter does not adequately fix the seed in the furrow	If the seed catcher is worn, the seed is not fixed in the furrow.	see page 116
The TwinTeC coulter does not guide the seed precisely into the furrow	If the guide extension is worn, the seed is not guided into the furrow.	see page 116
TwinTeC coulter is not spreading seed	The seed outlet is slightly clogged.	► Lift the implement. ► Clean the seed outlet from below.
	The seed outlet is severely clogged.	see page 117
Blocking of TwinTeC cutting disks	If the inner scraper is worn, the cutting disks are blocked by adhering soil.	see page 117
The RoTeC coulter does not spread seed	The seed outlet is slightly clogged.	► Lift the implement. ► Clean the seed outlet from below.
	The seed outlet is severely clogged.	see page 118
The coulter harrow does not adequately cover the seed with fine soil	The angle of the coulter harrow is incorrectly set.	► See *"Adjusting the TwinTeC coulter" > "Adjusting the harrow angle"*
	The height of the coulter harrow is incorrectly set.	► See *"Adjusting the TwinTeC coulter" > "Adjusting the harrow height"*
	The harrow tines of the coulter harrow are worn.	see page 118

Errors	Cause	Solution
Exact following harrow does not adequately cover the seed with fine soil	For seed drills without exact following harrow lift-out, the overload safety is triggered.	see page 119
	The harrow tines are not aligned parallel to the ground.	► See *"Adjusting the exact following harrow"* > *"Adjusting the position of the exact following harrow tines"*
	The exact following harrow pressure is incorrectly set.	► See *"Adjusting the exact following harrow"* > *"Manual adjustment of the exact following harrow pressure"* or *"Hydraulic adjustment of the exact following harrow pressure"*
	The harrow tines are worn.	see page 119
Roller harrow does not adequately cover the seed with fine soil	The harrow tines are worn.	see page 120
	The rollers are damaged.	see page 120
Electric drives are not running or they start running at the wrong time.	The switch points of the working position sensor are wrong.	► *To configure the working position sensor,* see *"Configuring the working position sensor"*.
The lighting for road travel has a malfunction.	Lamp or lighting supply line is damaged.	► Replace the lamp. ► Replace the lighting supply line.

TwinTeC coulter does not adequately fix the seed in the furrow

CMS-T-00006593-E.1

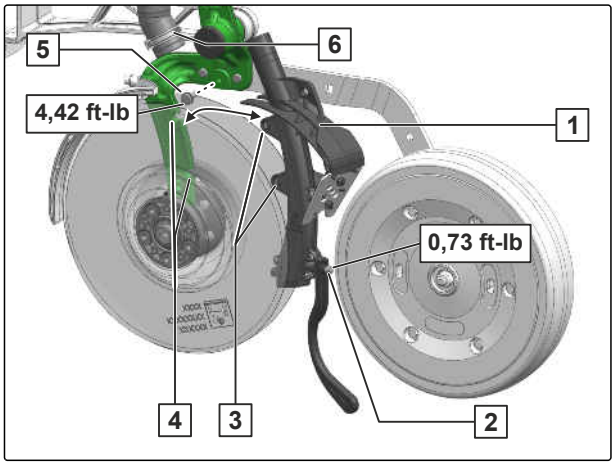

CMS-I-00003260

1. *Depending on the implement equipment,* dismount hose 6 or Y-piece.
2. Remove the bolt 5.
3. Dismount TwinTec seed outlet 1.
4. Remove the bolt 2.
5. Replace the seed catcher 3.
6. Mount the bolt 2.
7. *To mount the TwinTeC seed outlet:* Place the guides 3 in the coulter body 4.
8. Mount the bolt 5.
9. Mount hose.

The TwinTeC coulter does not guide the seed precisely into the furrow

CMS-T-00006594-D.1

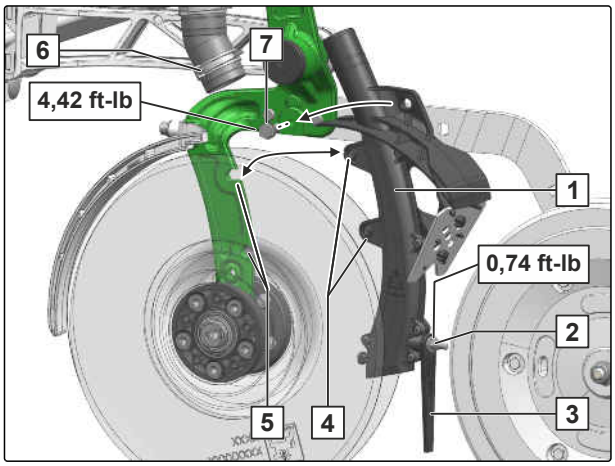

CMS-I-00003242

1. *Depending on the implement equipment,* dismount hose 6 or Y-piece.
2. Remove the bolt 7.
3. Dismount TwinTec seed outlet 1.
4. Remove the bolt 2.
5. Replace the guide extension 3.
6. Mount the bolt 2.
7. *To mount the TwinTeC seed outlet:* Place the guides 4 in the coulter body 5.
8. Mount the bolt 7.
9. Mount hose.

TwinTeC coulter is not spreading seed

CMS-T-00006601-C.1

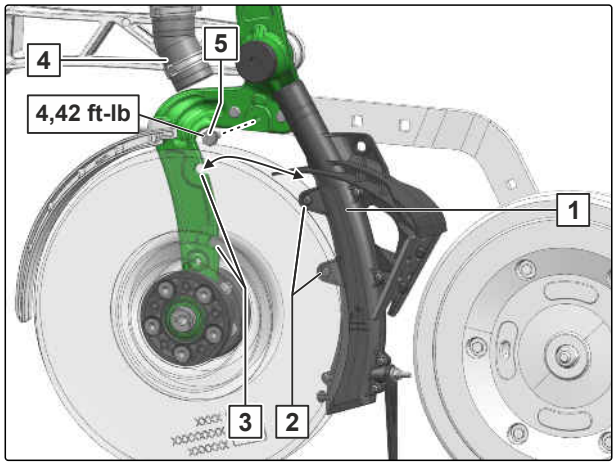

CMS-I-00003246

1. *If the blockage cannot be removed from below,* dismount the hose **4**

   or

   dismount the Y-piece.

2. Remove the bolt **5**.

3. Dismount the seed outlet **1**.

4. Clean seed outlet.

5. *To mount the seed outlet:*
   Place the guides **2** in the coulter body **3**.

6. Mount the bolt **5**.

7. Mount hose.

Blocking of TwinTeC cutting disks

CMS-T-00006595-D.1

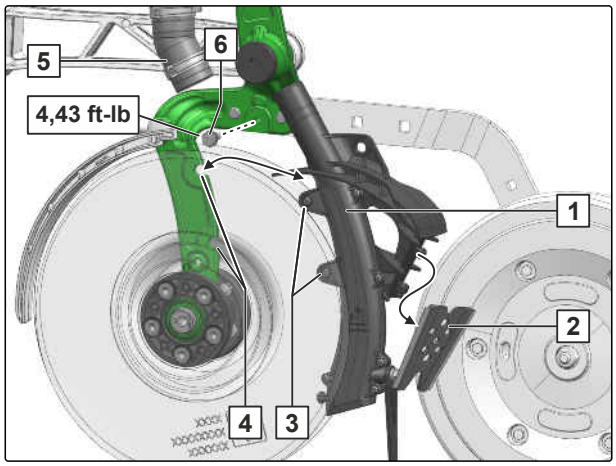

CMS-I-00003245

1. *Depending on the implement equipment,* dismount hose **5** or Y-piece.

2. Remove the bolt **6**.

3. Dismount TwinTec seed outlet **1**.

4. Replace the inner scrapers **2**.

5. Mount bolt.

6. *To mount the TwinTeC seed outlet:*
   Place the guides **3** in the coulter body **4**.

7. Mount bolt.

8. Mount hose.

RoTeC coulter does not spread seed

CMS-T-00007580-A.1

1. *If the blockage cannot be removed from below,* dismount the conveyor hose 2.
2. Clean the seed outlet 1 from above.
3. Mount the conveyor hose.

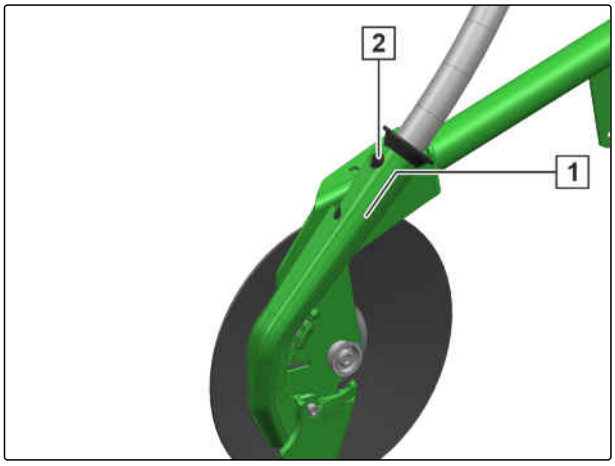

CMS-I-00004767

Coulter harrow does not adequately cover the seed with fine soil

CMS-T-00006604-B.1

1. Remove nut 1.
2. Remove the bolt 4.
3. Dismount the harrow holder 2.
4. Replace harrow tines 3.
5. Bring the harrow holder into the desired position.
6. Mount bolt.
7. Mount and tighten the nut.
8. *To check the adjustment:*
   Sow 98.43 ft (30 m) at working speed and check the work pattern.

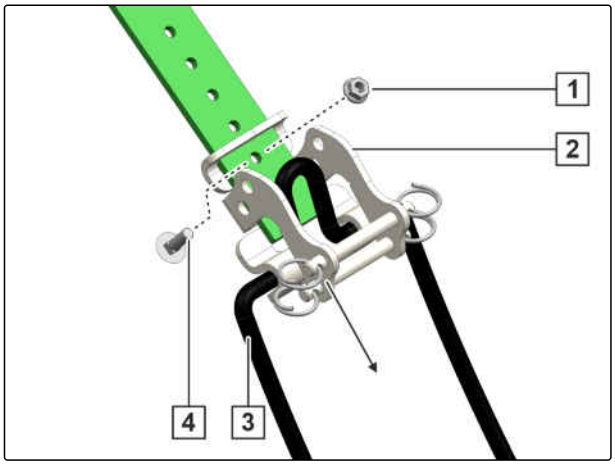

CMS-I-00004632

Exact following harrow does not adequately cover the seed with fine soil

CMS-T-00007581-B.1

The following actions must be performed to replace worn shear bolts 1.

1. *To correctly position the exact following harrow:*
   Lift out the implement.
2. Remove the remnants of the broken shear bolt 1.
3. Dismount one of the replacement shear bolts 2.
4. Mount the replacement shear bolt with washers and nut at the position 1.

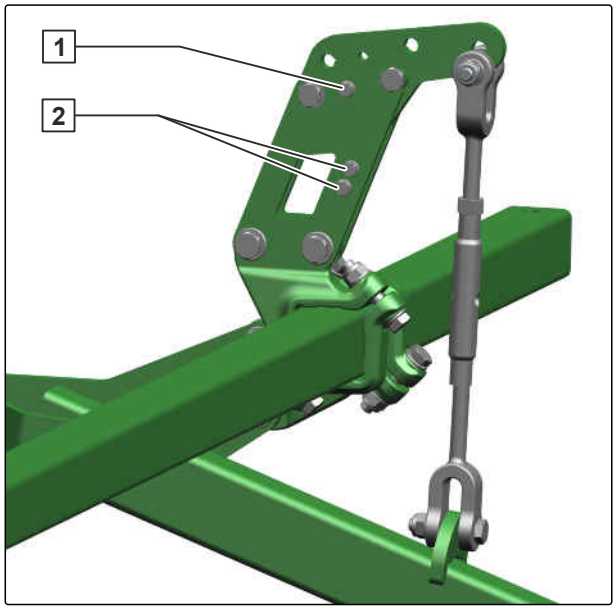

CMS-I-00004678

The following actions must be performed, if the harrow tines are worn.

1. Remove nuts 1.
2. Dismount bolts 5 and plates 2.
3. Replace harrow tines 3 and 4.
4. Mount plates and bolts.
5. Mount and tighten washers and nuts.

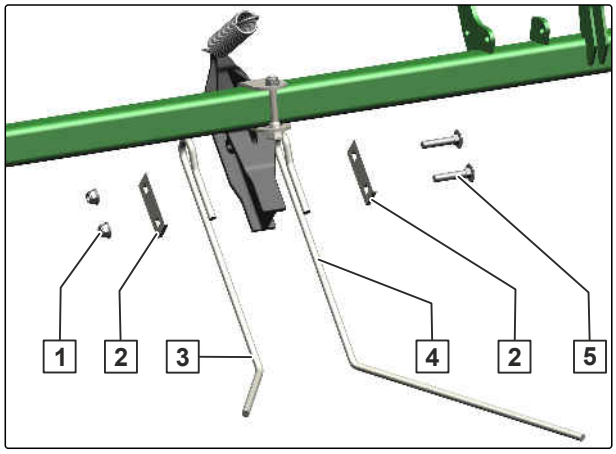

CMS-I-00004677

Roller harrow does not adequately cover the seed with fine soil

CMS-T-00007582-A.1

Follow the instructions below, when a harrow tine is worn.

1. Remove nut 3.
2. Dismount the plate 2.
3. Replace harrow tines 1.
4. Mount the plate.
5. Mount and tighten the nut.

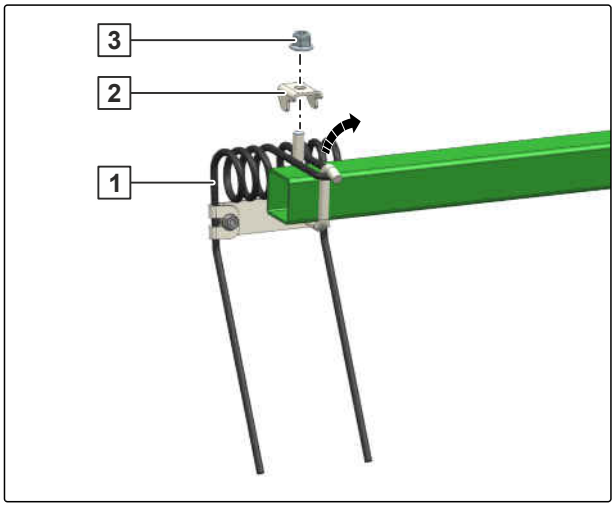

CMS-I-00005330

Follow the instructions below, if a roller is damaged.

1. Remove nut 3.
2. Remove the bolt 1.
3. Dismount plates 4.
4. Replace roller 2.
5. Mount the plates.
6. Mount bolt.
7. Mount and tighten the nut.

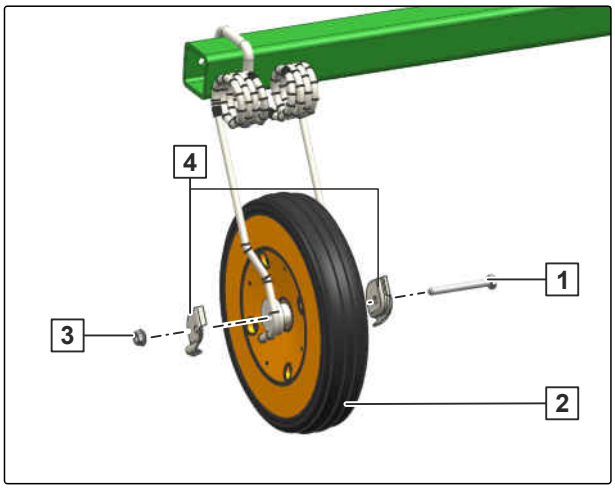

CMS-I-00005332

Parking the implement

9

CMS-T-00008464-A.1

9.1 Emptying hopper and metering units

CMS-T-00008484-A.1

1. Pull out the calibration trough **1**.

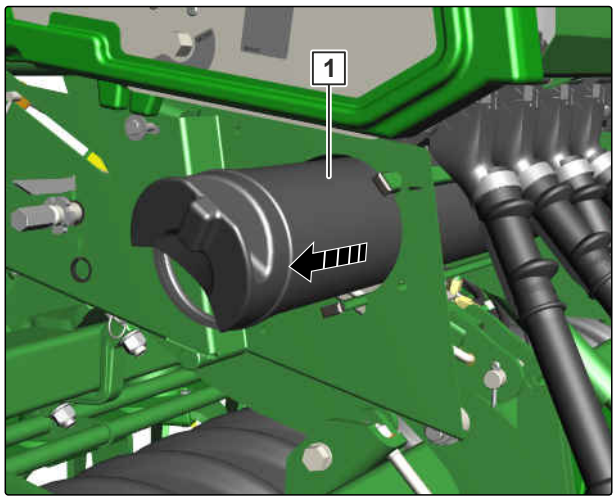

CMS-I-00005707

2. *To collect the seed in the calibration trough* ***1***:
   Turn the calibration trough with the opening facing up.

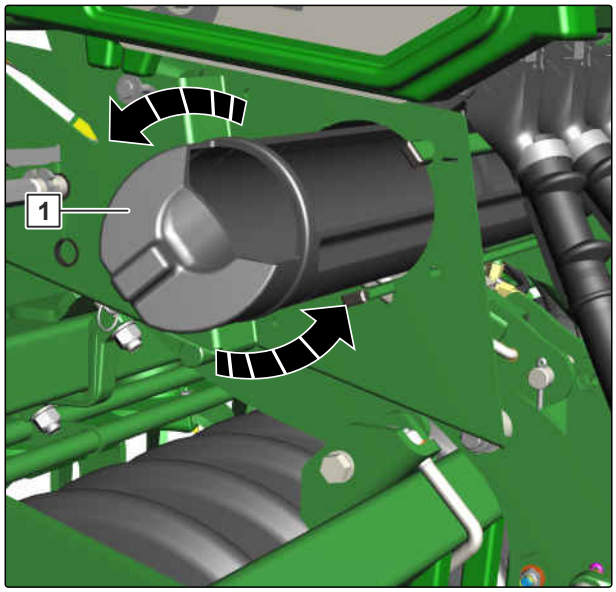

CMS-I-00005708

3. Retract in the 1 calibration trough.

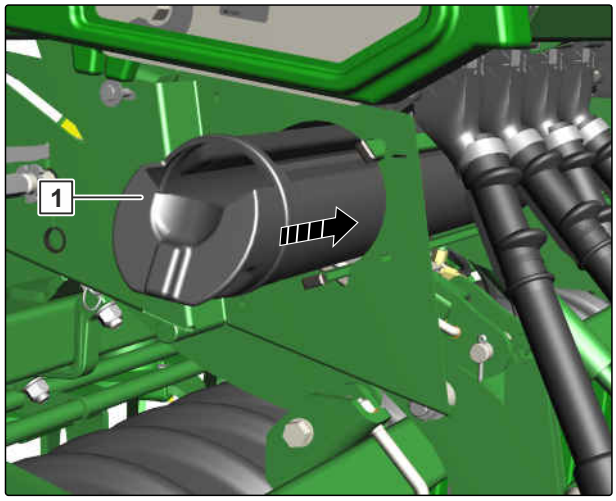

CMS-I-00005709

4. Bring the bottom flap lever 2 into the position of the last seeding.

5. *To route the seed into the calibration trough:* Bring the calibration lever 1 into the end position beyond the catch.

6. Push the calibration lever back and let it engage in calibration position.

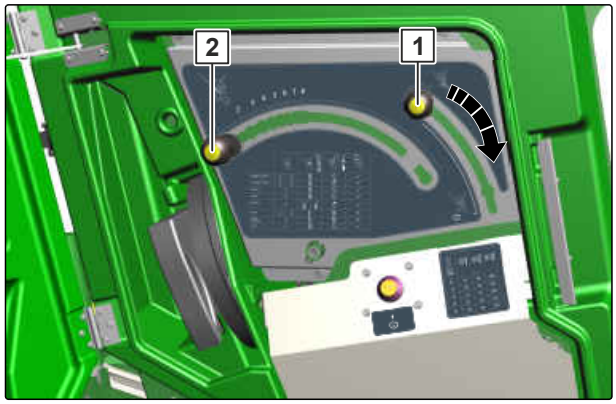

CMS-I-00007686

7. Completely open both sliding shutters 1 on the metering units.

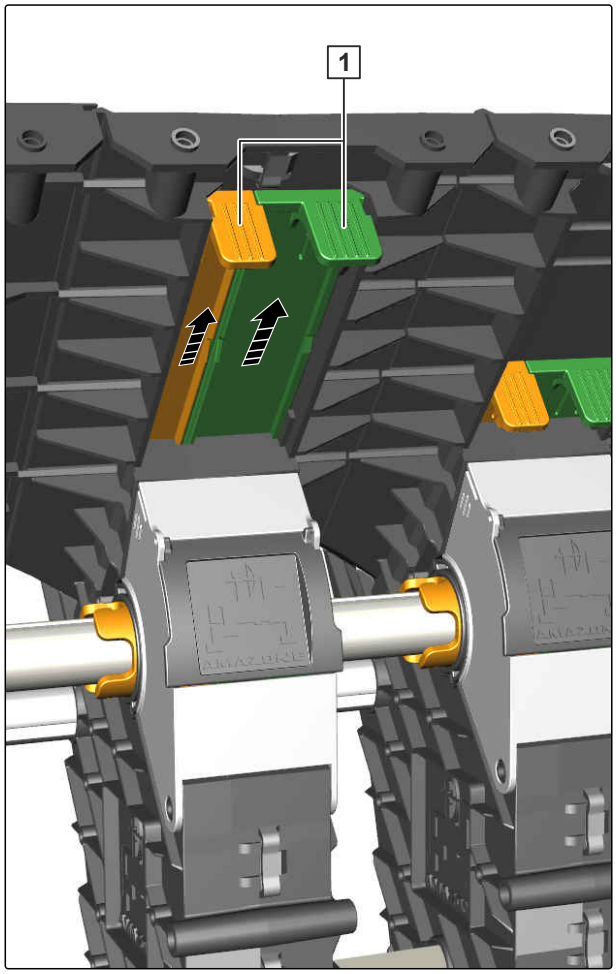

CMS-I-00005759

8. *To empty the hopper:*
Bring the bottom flap lever 2 into end position.

IMPORTANT Risk of implement damage due to seed jammed in the metering housing

► Slowly activate the bottom flap lever.

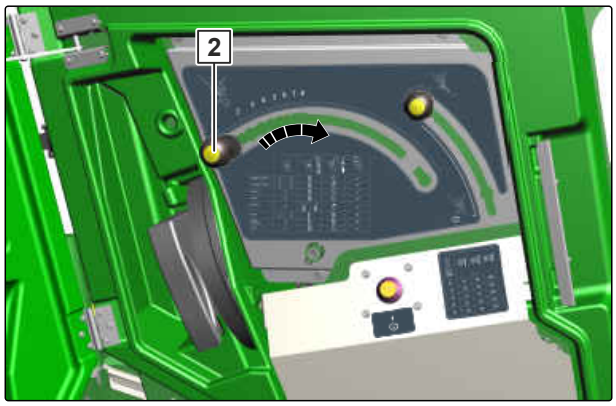

CMS-I-00005745

9. *To interrupt the emptying procedure:*
Bring the bottom flap lever into the position of the last seeding.

10. *To empty the metering wheels via the calibration button or the TwinTerminal:*
See the *"Emptying menu"* in the ISOBUS software operating manual.

11. *To remove the seed remaining in the metering housing* **1**:
    Move the bottom flap lever in both directions several times.

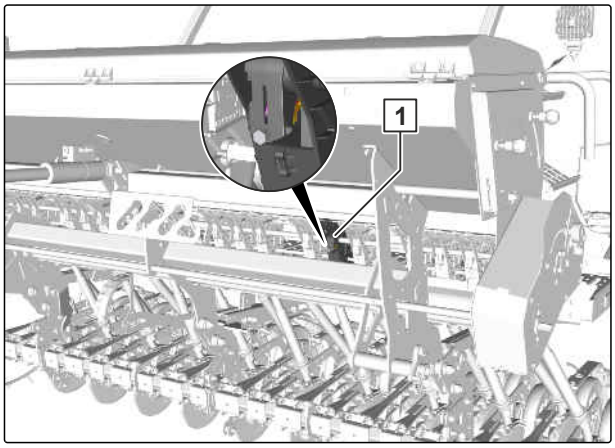

CMS-I-00007493

When the bottom flaps are correctly adjusted the bolts of the metering housing are lined up.

12. *If a bolt on the metering housing deviates from the line,*
    correct the bottom flap setting, see section *"Checking the basic setting of the bottom flaps"*.

13. Pull out the calibration trough **1**.

14. Empty the calibration trough.

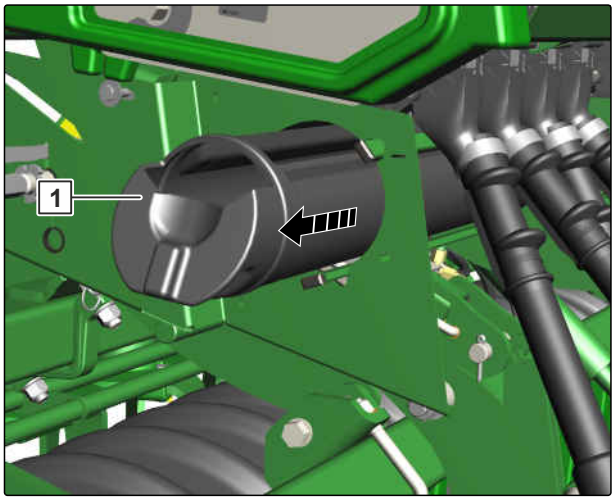

CMS-I-00005760

15. Retract in the **1** calibration trough.

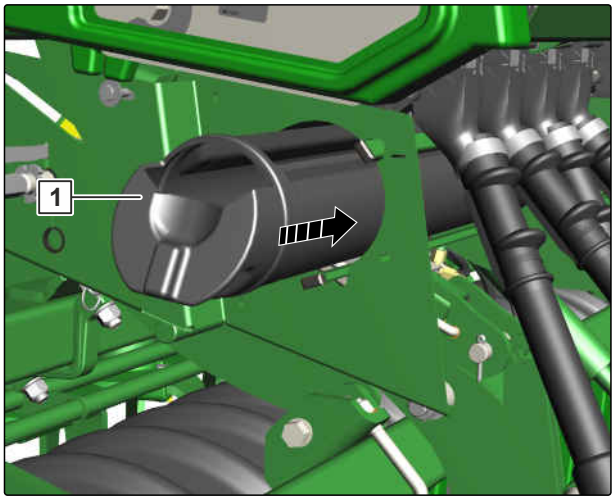

CMS-I-00005709

9.2 Parking the TwinTeC coulter

CMS-T-00004436-B.1

1. Lift out the implement.

2. Fit the universal operating tool on the adjustment spindle 1.

3. *To bring the TwinTeC coulters into parking position, reduce the placement depth to zero.* Turn the universal operating tool counter-clockwise -.

➡ The scale 3 provides orientation.

4. Take off the universal operating tool and allow the catch 2 to engage in a groove of the grid.

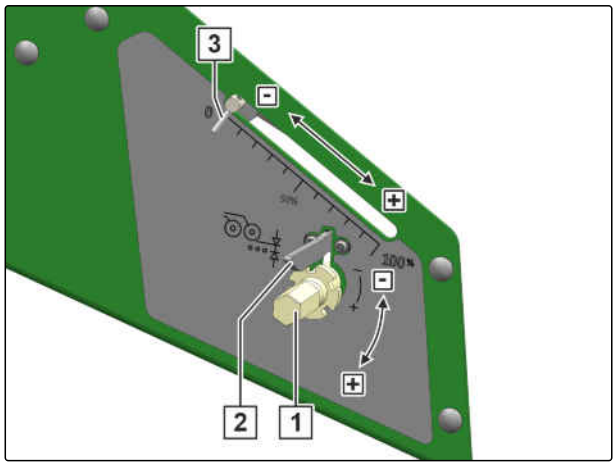

CMS-I-00003114

9.3 Uncoupling the hydraulic hose lines

CMS-T-00000277-E.1

1. Secure tractor and implement.

2. Bring the tractor control unit into float position.

3. Uncouple the hydraulic hose lines 1.

4. Attach the dust caps on the hydraulic sockets.

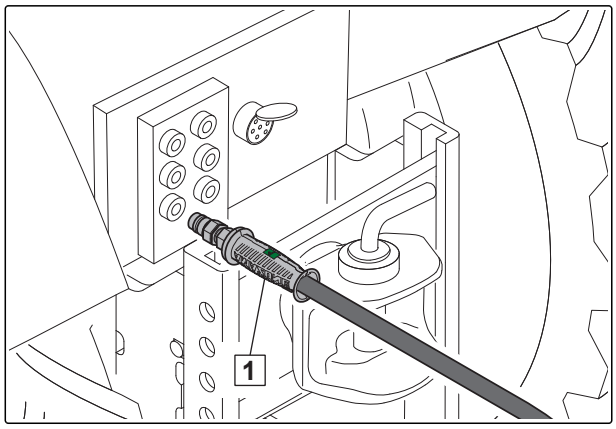

CMS-I-00001065

5. Hook-in the hydraulic hose lines 1 on the hose cabinet.

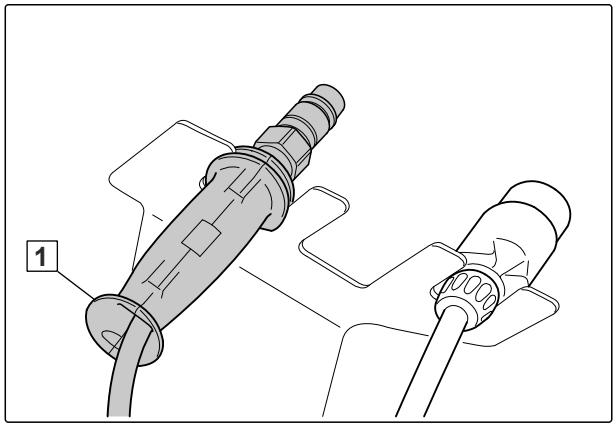

CMS-I-00001250

9.4 Uncoupling the ISOBUS or control computer

CMS-T-00006174-D.1

1. Unplug the plug connector of the ISOBUS line 1 or the control computer line 2.
2. Protect the plug with a dust cap.
3. Hook-in the plug connector on the hose cabinet.

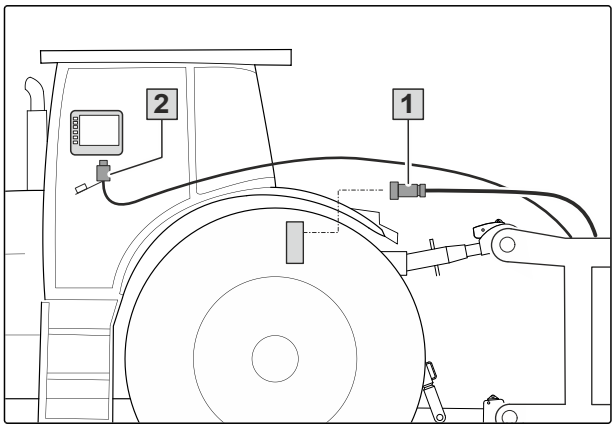

CMS-I-00006891

9.5 Uncoupling the power supply

CMS-T-00001402-G.1

1. Unplug the connector 1 for the power supply.

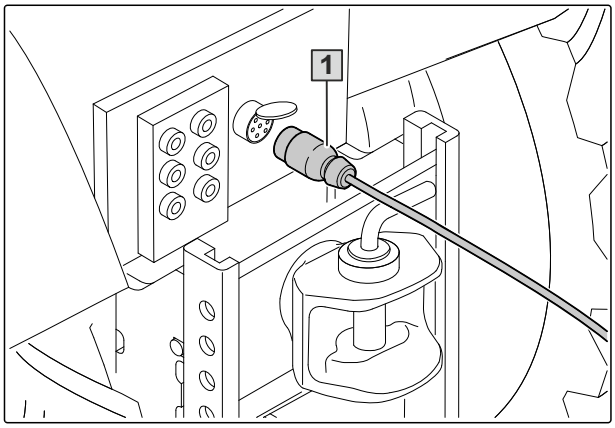

CMS-I-00001048

2. Hook-in the connector 1 on the hose cabinet.

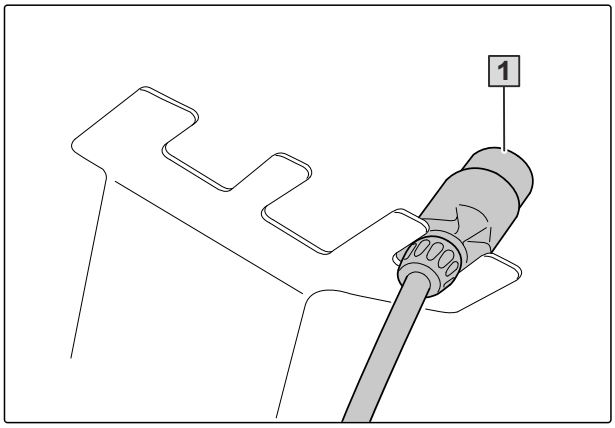

CMS-I-00001248

9.6 Uncoupling the seeding combination

CMS-T-00008488-A.1

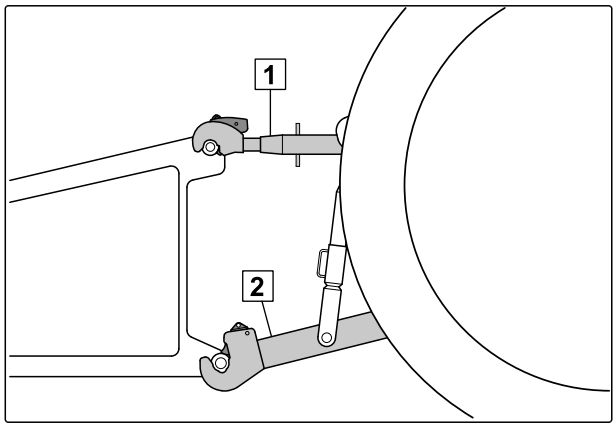

CMS-I-00001249

WARNING

Risk of severe or fatal injury due to the seeding combination overturning

- *Because the parking supports are not designed for the coupled seeding combination,*
  do not place the seeding combination on the parking supports.

1. Offload the top link 1.
2. Disconnect the top link 1 from the implement from the tractor seat.
3. Offload the lower link 2.
4. *To prevent the seeding combination from rolling:*
   Place 2 pieces of squared timber, at least 3.15 in (80 mm) x 3.15 in (80 mm) in size, in front of and behind the roller of the soil tillage implement.
5. Uncouple the lower links 2 of the implement from the tractor seat.
6. Drive the tractor forward.

9.7 Parking the pack top seed drill

CMS-T-00008491-A.1

Parking support 1 for implements with RoTeC coulters. Parking support 2 for implements with TwinTeC coulters.

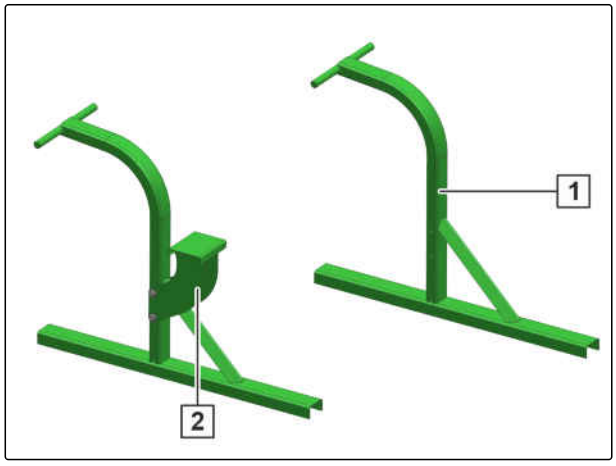

CMS-I-00004939

1. *To set the coulter pressure to 0:*
   See section "Hydraulic coulter pressure adjustment"

   or

   Section "Manual coulter pressure adjustment".

2. *To set the placement depth to 0:*
   See section "Adjusting the placement depth on the TwinTeC coulter".

3. Disconnect the supply line **1** from the soil tillage implement **2**.

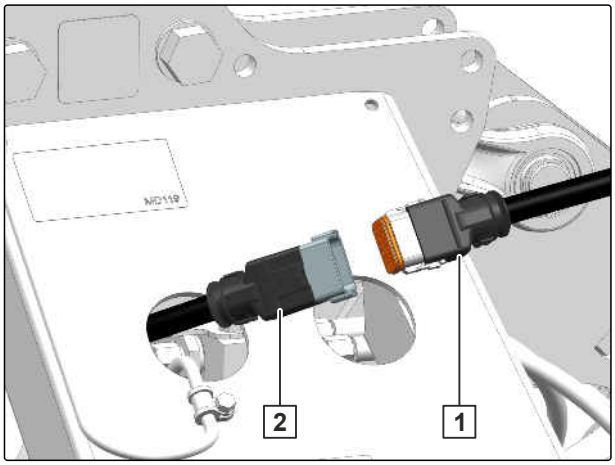

CMS-I-00004528

4. Disconnect the supply line **2** for the rear lighting and identification from the soil tillage implement **1**.

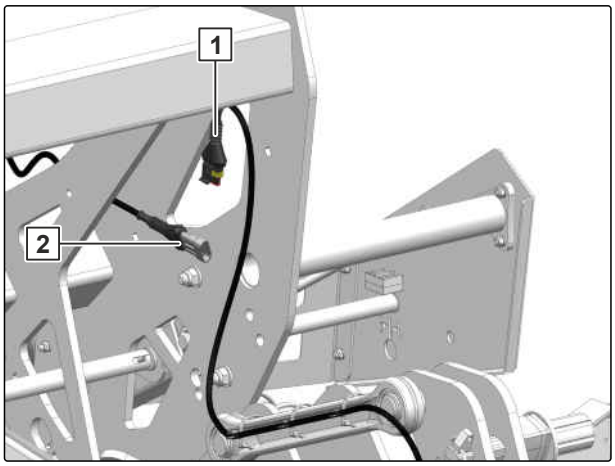

CMS-I-00004527

5. *If the pack top seed drill has a tramline marker,* Disconnect the supply line of the pack top seed drill from the soil tillage implement 1.

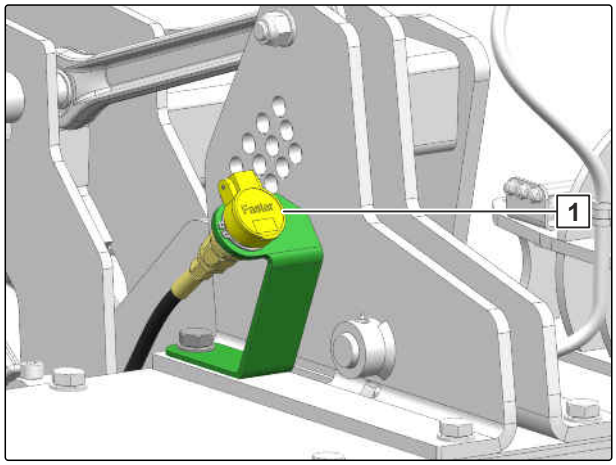

CMS-I-00003485

6. Dismount the safety clamps 2 from all of the brackets 1.

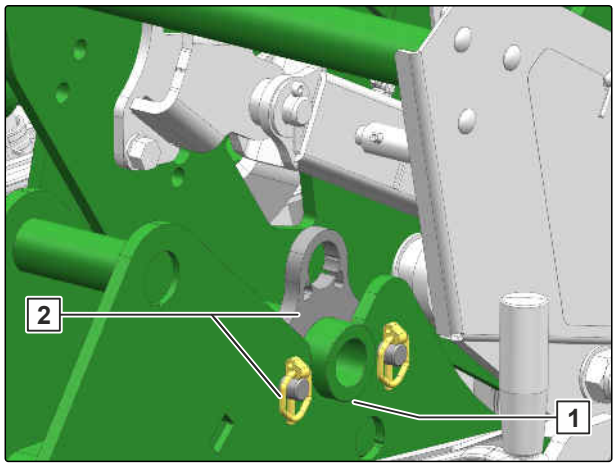

CMS-I-00003593

WARNING

The parking supports do not have an arrest.

► *To prevent the parking supports from falling out of the receptacle while the implement is in motion:*
Dismount the parking supports.

7. Mount the parking supports 1 on both sides of the implement 2.

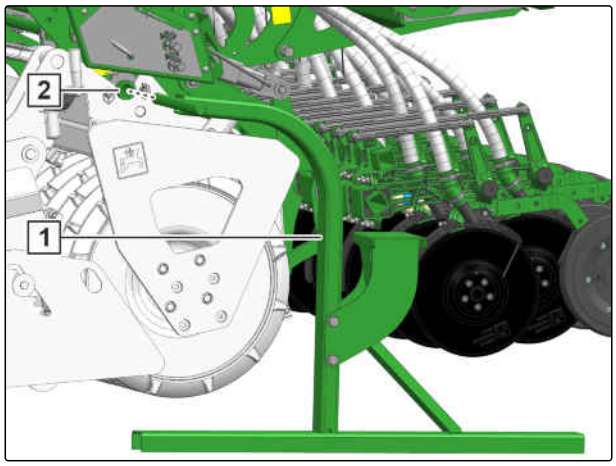

CMS-I-00004938

8. Park the soil tillage implement with the coupled pack top seed drill.

9. Dismount linch pin 2.

10. Remove the pin 3.

11. Detach the top link 1 from the soil tillage implement.

12. Release the holder 4.

13. Take the hydraulic hose lines out of the guide 5 and place them in the hose cabinet 6.

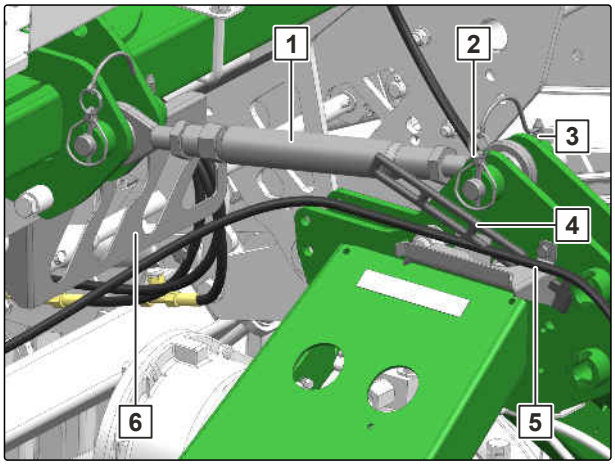

CMS-I-00004526

14. Disconnect the supply line for the job computer from the hose package and place it in the hose cabinet.

15. Disconnect the supply line for the job computer from the tractor and place it in the hose cabinet.

16. *To park the implement on a horizontal parking area with a stable surface:*
Slowly lower the soil tillage implement.

➡ The catching sockets 2 of the soil tillage implement are lowered.

➡ The pack top seed drill 1 rests on the parking supports.

17. Mount the safety clamps 3 on the soil tillage implement.

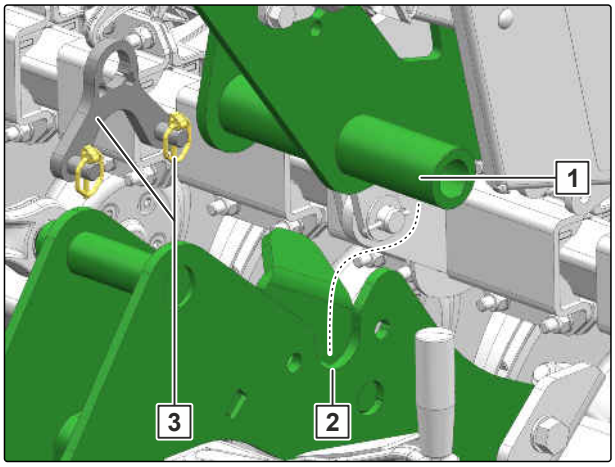

CMS-I-00003590

18. Slowly drive the tractor with the coupled soil tillage implement 1 forward.

CMS-I-00005764

Maintaining the implement

10

CMS-T-00008465-A.1

10.1 Cleaning the implement

CMS-T-00000593-F.1

IMPORTANT

Risk of implement damage due to the cleaning jet of the high-pressure nozzle

- Never aim the cleaning jet of the high-pressure cleaner or hot water high-pressure cleaner at the marked components.
- Never aim the cleaning jet of high-pressure cleaners or hot water high-pressure cleaners at electrical or electronic components.
- Never aim the cleaning jet of the high pressure cleaner directly at lubrication points, bearings, rating plates, warning signs, or stickers.
- Always maintain a minimum distance of 11.81 in (30 cm) between the high-pressure nozzle and the implement.
- Do not exceed maximum water pressure of 1,740.45 psi (120 bar).

CMS-I-00002692

- Clean the implement with a high-pressure cleaner or a hot water high-pressure cleaner.

10.2 Maintaining the implement

CMS-T-00008492-A.1

10.2.1 Maintenance schedule

After initial operation	
Checking the tightening torque of the radar sensor bolts	see page 138
Checking the hydraulic hose lines	see page 142

After the first 10 operating hours	
Lubricating the drive chain on the left metering drive	see page 138
Lubricating the drive chain on the right metering drive	see page 139

After the first 50 operating hours	
Cleaning the hopper	see page 141
Cleaning the hand wash tank	see page 144

at the end of the season	
Checking RoTeC depth control disks and RoTeC depth control wheels	see page 136

as required	
Cleaning the hopper	see page 141
Cleaning the hand wash tank	see page 144

daily	
Checking the top link pin and lower link pin	see page 142

Every 12 months	
Checking the tightening torque of the radar sensor bolts	see page 138

Every 50 operating hours / weekly	
Checking the TwinTeC cutting disk spacing	see page 133
Checking the TwinTeC cutting disks	see page 134
Checking the TwinTeC depth control wheel scraper	see page 135
Checking the TwinTeC depth control wheel	see page 136
Checking the cutting disks	see page 140
Checking the hydraulic hose lines	see page 142
Checking the RoTeC furrow formers	see page 143

Every 50 operating hours / at the end of the season	
Lubricating the drive chain on the left metering drive	see page 138
Lubricating the drive chain on the right metering drive	see page 139

Every 500 operating hours / Every 3 months	
Checking the home position of the bottom flaps	see page 143

10.2.2 Checking the TwinTeC cutting disk spacing

CMS-T-00004447-E.1

INTERVAL

- Every 50 operating hours

  or

  weekly

1. Turn the TwinTeC cutting disk 1.

➡ The opposite disk turns as well. The spacing is correctly set.

2. *If the opposite disk does not also turn,* adjust the cutting disk spacing.

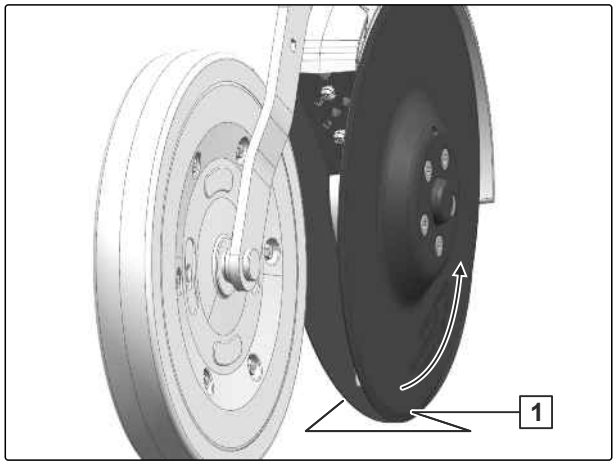

CMS-I-00003244

3. Dismount bolts 8.
4. Dismount the TwinTeC cutting disk 7.
5. Dismount the sealing ring 5.
6. Dismount the central bolts 6.

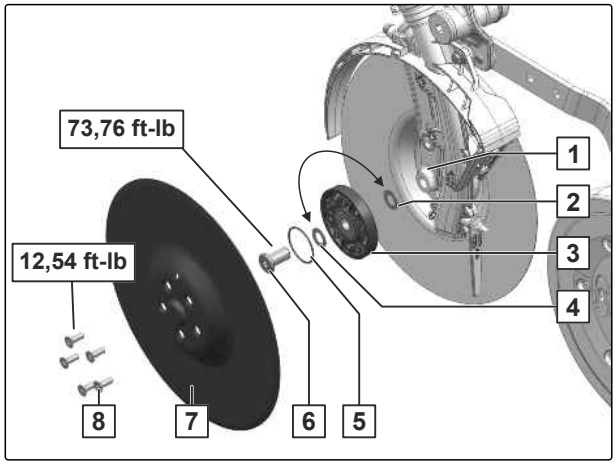

CMS-I-00003234

NOTE

The central bolts have different thread:

- The right central bolt has right-hand thread
- The left central bolt has left-hand thread

7. *To ensure that the cutting disks touch slightly,* adjust the spacing of the cutting disks with the spacer disks 4 and 2.

8. Mount spacer disks that are not required on the opposite side of the cutting disk bearing 3, with the central bolt.

9. Mount the cutting disk bearing on the coulter 1.

10. Mount the central bolt.

11. *If the sealing ring is damaged,*
replace the sealing ring.

12. Mount sealing ring.

13. Mount TwinTeC cutting disk.

14. Mount the bolts.

10.2.3 Checking the TwinTeC cutting disks

CMS-T-00004452-E.1

INTERVAL

- Every 50 operating hours
  or
  weekly

Original disk diameter	Wear limit
13.39 in (340 mm)	11.81 in (300 mm)

1. Slightly lift the implement.

2. Determine the cutting disk diameter.

3. *If the diameter of a cutting disk is less than the wear specified in the table,*
replace the TwinTeC cutting disk.

4. Dismount bolts 2.

5. Dismount worn TwinTeC cutting disks 1.

6. Pay attention to the alignment of the sealing ring 3.

7. Mount new TwinTeC cutting disks.

8. *To ensure that the TwinTeC cutting disks touch slightly:*
See section *"Checking the TwinTeC cutting disk spacing"*.

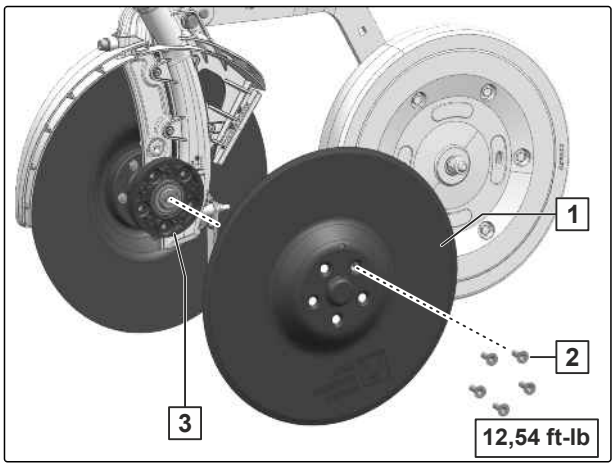

CMS-I-00003233

10.2.4 Checking the TwinTeC depth control wheel scraper

CMS-T-00004989-E.1

INTERVAL

- Every 50 operating hours

  or

  weekly

IMPORTANT

Damage to the depth control wheel due to abrasion caused by the adjacent scraper

► *To check the distance,*
rotate the depth control wheel

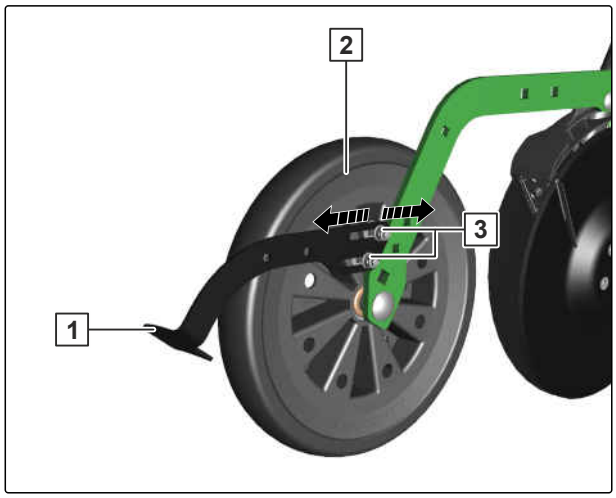

CMS-I-00006164

1. Lift out the implement.
2. *To check the distance of the TwinTeC depth control wheel scraper* **1**:
   Rotate the wheel **2**.
3. *If the distance is greater than or less than 0.12 in (3 mm),*
   Unscrew the nut **3**.
4. Adjust the TwinTeC depth control wheel scraper **1**.
5. Tighten the nut.
6. *To check the distance:*
   Rotate the wheel again.
7. *If the TwinTeC depth control wheel scraper cannot be re-adjusted any further,*
   replace the depth control wheel scraper.
8. Dismount nut and washer.
9. Replace the TwinTeC depth control wheel scraper.
10. Mount washer and nut.
11. *To check the distance:*
    Rotate the wheel.

10.2.5 Checking the TwinTeC depth control wheel

CMS-T-00004451-D.1

INTERVAL

- Every 50 operating hours

  or

  weekly

1. Check the TwinTeC depth control wheel 1.
2. *If the TwinTeC depth control wheel has cracks or nicks,*
   Replace the depth control wheel.
3. Remove nut and washer 2.
4. Replace the damaged TwinTeC depth control wheel.
5. Mount nut and washer.

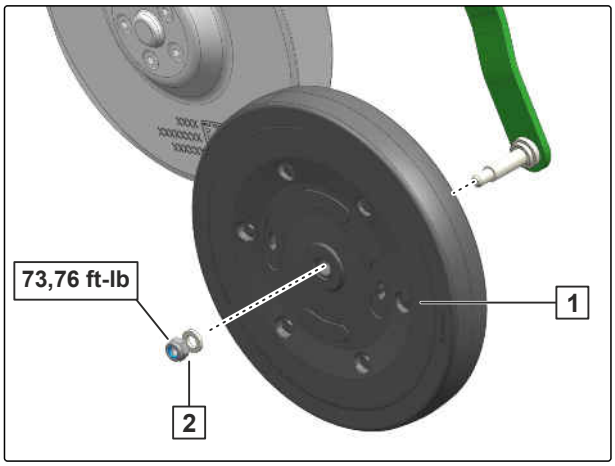

CMS-I-00003243

10.2.6 Checking RoTeC depth control disks and RoTeC depth control wheels

CMS-T-00006349-D.1

INTERVAL

- at the end of the season

1. Check the RoTeC depth control disks or RoTeC depth control wheels for damage, such as cracks or nicks.
2. *If a RoTeC depth control disk or RoTeC depth control wheel is damaged,*
   replace the RoTeC depth control disk or RoTeC depth control wheel.
3. *To take the damaged RoTeC depth control disk or RoTeC depth control wheel 1 off of the coulter:*
   Move the lever all the way down and push it to the rear in the slotted hole 3 until the RoTeC depth control disk or RoTeC depth control wheel can be taken off.

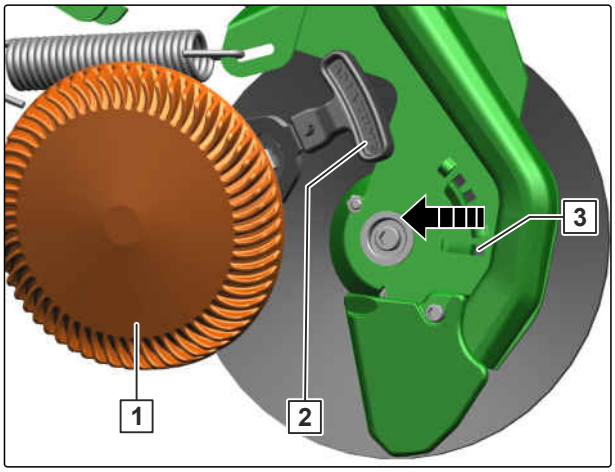

CMS-I-00004665

The dismounted unit, consisting of RoTeC depth control disk or RoTeC depth control wheel [4] and lever [2], can be replaced as a whole or it can be further dismantled. If only the RoTeC depth control disk or RoTeC depth control wheel should be replaced, the unit must be further dismantled as described below.

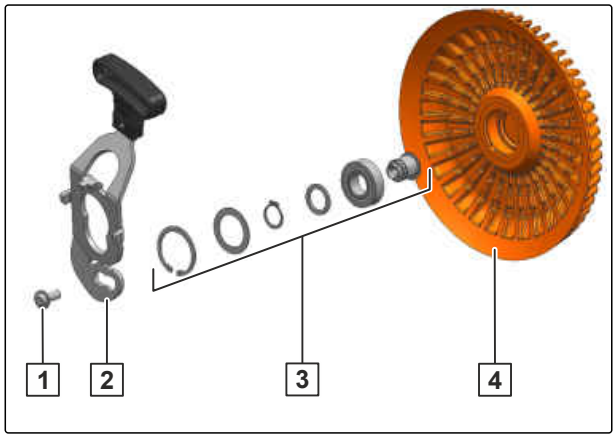

CMS-I-00004802

4. Remove the bolt [1].

5. Take the axle, ball bearing, locking rings, and locking washers [3] out of the worn RoTeC depth control disk or RoTeC depth control wheel and insert them in the new RoTeC depth control disk or RoTeC depth control wheel.

6. Mount the lever [2] with the bolt [1] on the new RoTeC depth control disk or RoTeC depth control wheel [4].

7. *To mount the new RoTeC depth control disk or RoTeC depth control wheel [5] on the coulter:*
   Set the notch of the lever [4] on the bearing seat [1] of the cutting disk, press it firmly against the RoTeC depth control disk or RoTeC depth control wheel and pull the lever towards the front in the elongated slot [3] until the RoTeC depth control disk or RoTeC depth control wheel locks in place.

8. *To adjust the placement depth:*
   Pull on the lever for the RoTeC depth control disk or RoTeC depth control wheel, move it up and let it engage in the desired hole [2].

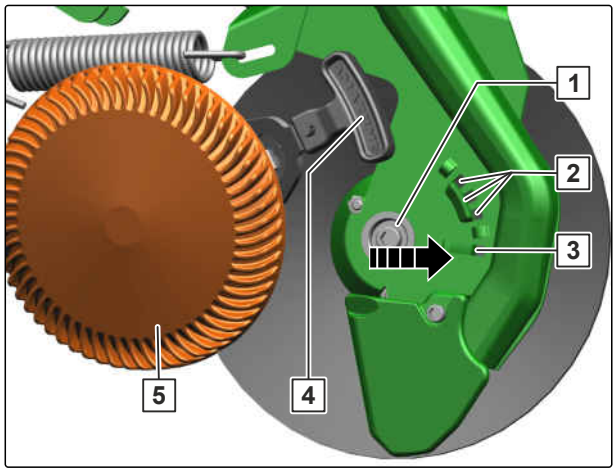

CMS-I-00004836

10.2.7 Checking the tightening torque of the radar sensor bolts

CMS-T-00002383-H.1

INTERVAL

- After initial operation
- Every 12 months

NOTE

If the tightening torque is too high, the spring-suspended sensor receptacle will warp. As a result, the radar sensor does not work properly.

Depending on the implement equipment, different radar sensors can be installed.

▶ Check the tightening torque on the wheel sensor.

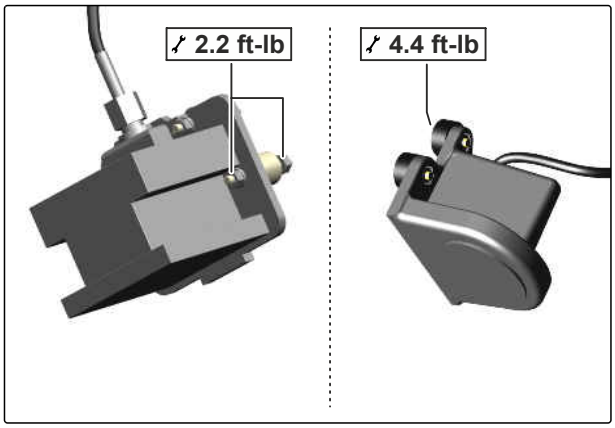

CMS-I-00002600

10.2.8 Lubricating the drive chain on the left metering drive

CMS-T-00008500-A.1

INTERVAL

- After the first 10 operating hours
- Every 50 operating hours

  or

  at the end of the season

1. Fit the universal operating tool 1 on the locking mechanism 2.
2. *To unlock the cover of the chain drive:*
   Turn the universal operating tool clockwise.

➡ The cover of the chain drive can be opened.

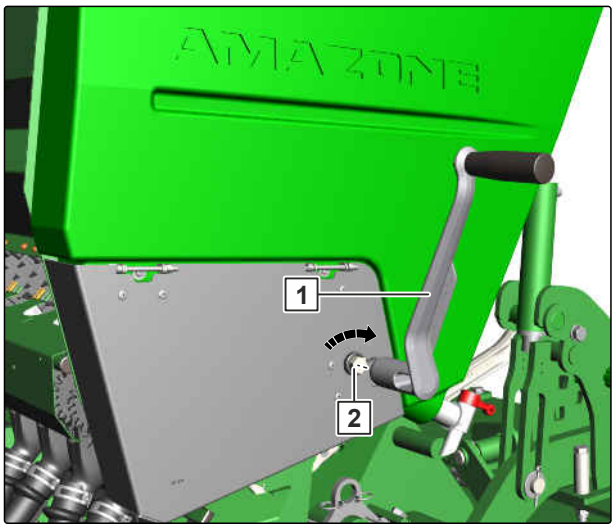

CMS-I-00005741

3. Lubricate the drive chain 1 from inside to outside.

4. Check chain tensioner 2 for ease of movement.

5. Close the cover of the chain drive.

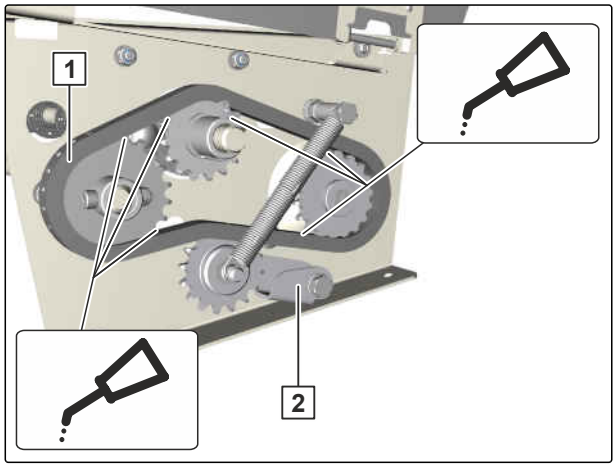

CMS-I-00006271

10.2.9 Lubricating the drive chain on the right metering drive

CMS-T-00009152-A.1

INTERVAL

- After the first 10 operating hours
- Every 50 operating hours

  or

  at the end of the season

1. Fit the universal operating tool 3 on the locking mechanism 2.

2. *To unlock the cover 1 of the chain drive:*
   Turn the universal operating tool clockwise.

➡ The cover of the chain drive can be opened.

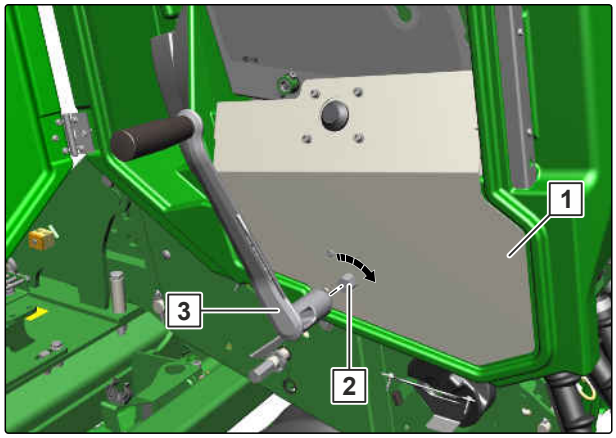

CMS-I-00005793

3. Flip up the cover 1 of the chain drive.

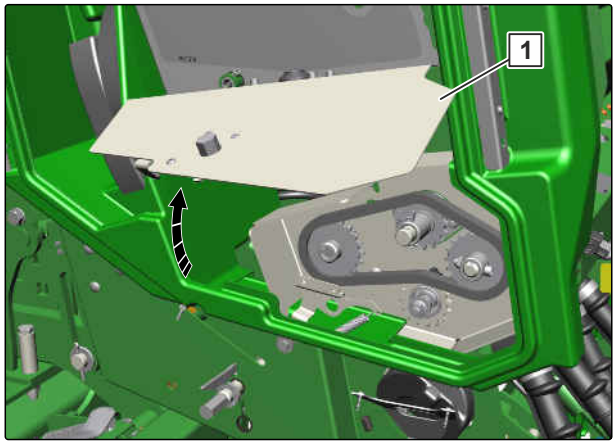

CMS-I-00005809

4. Lubricate the drive chain 2 from inside to outside.

5. Check chain tensioner 1 for ease of movement.

6. Close the cover of the chain drive.

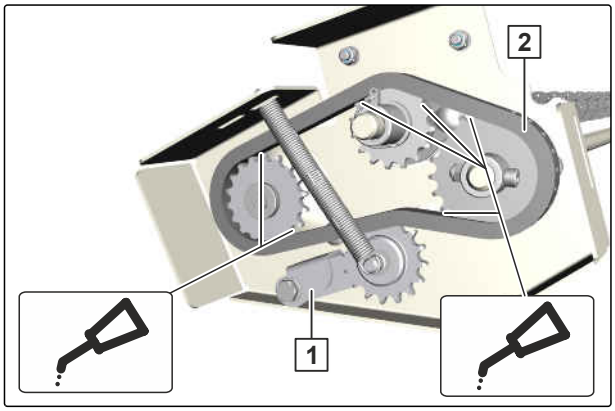

CMS-I-00006269

10.2.10 Checking the cutting disks

CMS-T-00007567-B.1

INTERVAL

- Every 50 operating hours

  or

  weekly

1. Determine the diameter of the cutting disks.

2. *If the diameter of a cutting disk is less than 14.37 in (365 mm),*
   replace the cutting disk.

3. *To replace the cutting disk:*
   Dismount the bolts 2 on the front side of the cutting disk.

4. Replace a worn cutting disk 1.

5. Mount the bolts.

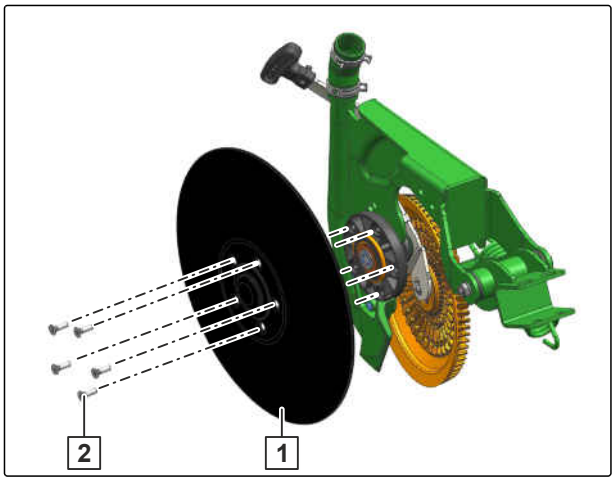

CMS-I-00005324

10.2.11 Cleaning the hopper

CMS-T-00008494-A.1

INTERVAL

- After the first 50 operating hours
- as required

1. Open the hopper cover.

2. Release the locking mechanism 1 with the universal operating tool 2.

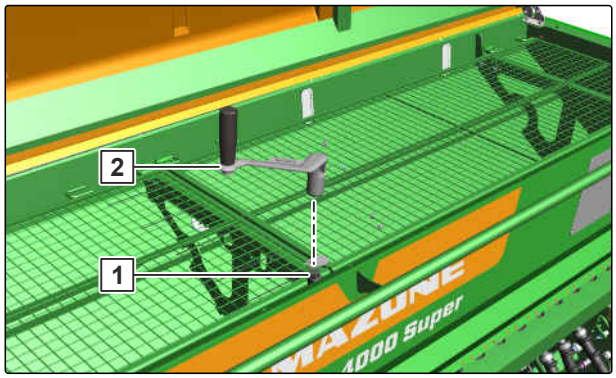

CMS-I-00005769

3. Slide the lock plate 1 to the side.

➡ The grating screens can be opened.

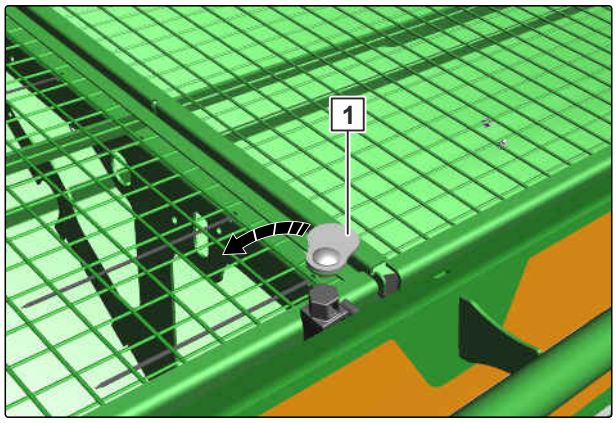

CMS-I-00005771

4. Swing up the grating screen 1.

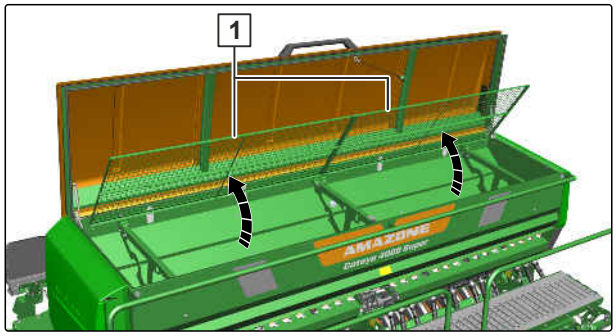

CMS-I-00005770

5. Clean the hopper.

6. Close hopper cover.

10.2.12 Checking the top link pin and lower link pin

CMS-T-00002330-J.1

INTERVAL

- daily

Criteria for visual inspection of lower link pin and top link pin:

- Cracks
- Nicks
- Permanent deformations
- Permissible wear: 0.08 in (2 mm)

1. Check the lower link pins and top link pins for the criteria cited.

2. Replace worn pins.

10.2.13 Checking the hydraulic hose lines

CMS-T-00002331-D.1

INTERVAL

- After initial operation
- Every 50 operating hours

  or

  weekly

1. Check the hydraulic hose lines for damage, such as chafing points, cuts, tears or deformation.

2. Checking the hydraulic hose lines for leaks.

Hydraulic hose lines must not be more than 6 years old.

3. Check the manufacturing date 1.

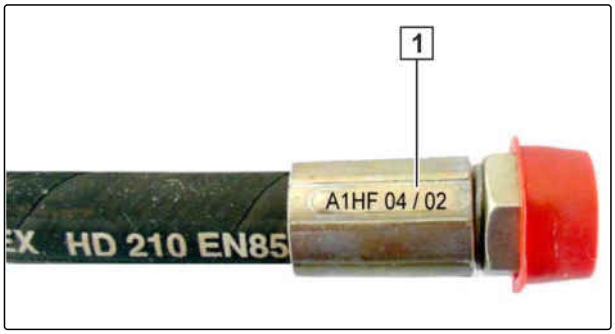

CMS-I-00000532

4. Have any worn, damaged or aged hydraulic hose lines replaced immediately in a specialist workshop.

5. Retighten loose threaded connections.

10.2.14 Checking the RoTeC furrow formers

CMS-T-00006374-C.1

INTERVAL

- Every 50 operating hours

  or

  weekly

1. Take off the depth control disk or depth control wheels.

2. *If the indicated dimension* **A** *on a furrow former is less than 3.86 in (98 mm),*
   Replace the furrow former.

3. *To replace the furrow former:*
   Dismount the bolt **2** and dispose of it.

4. Replace the worn furrow former **1**.

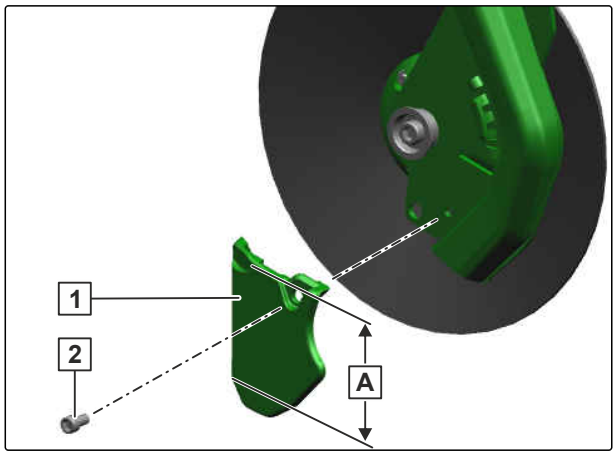

CMS-I-00004667

NOTE

The bolts for the furrow formers are coated and they must not be reused.

5. Mount a new bolt **2**.

10.2.15 Checking the home position of the bottom flaps

CMS-T-00011935-A.1

INTERVAL

- Every 500 operating hours

  or

  Every 3 months

1. *When the hopper is full,*
   close all sliding shutters.

2. Empty the metering wheels, see section *"Emptying the hopper and metering unit"*.

3. Set the bottom flap lever **1** at scale value 1.

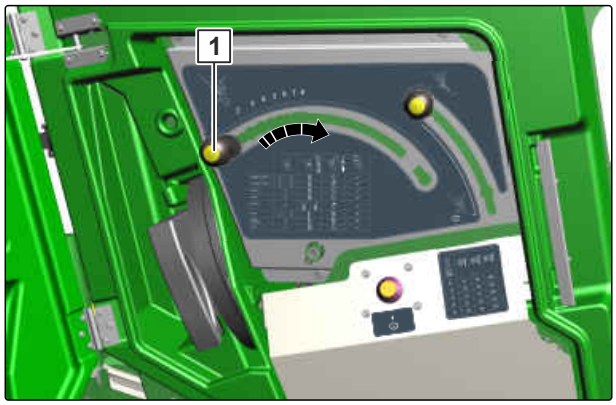

CMS-I-00005783

The distance **A** between the bottom flap and the metering wheel must be between 0 in (0.1 mm) and 0.02 in (0.5 mm).

4. Check the distance between the bottom flap and metering wheel.

5. *If the distance between the bottom flap and the metering wheel is not in the range of distance* ***A***,
   Use the bolt **2** to set the prescribed distance.

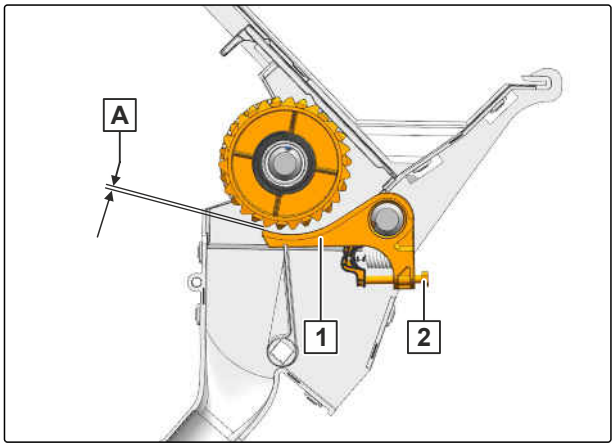

CMS-I-00007513

10.2.16 Cleaning the hand wash tank

CMS-T-00008498-A.1

INTERVAL

- After the first 50 operating hours
- as required

1. *To empty the hand wash tank:*
   Open the water tap **1**.

2. Open the screw cap **2**.

3. *To remove contamination:*
   Direct a jet of water into the hand wash tank.

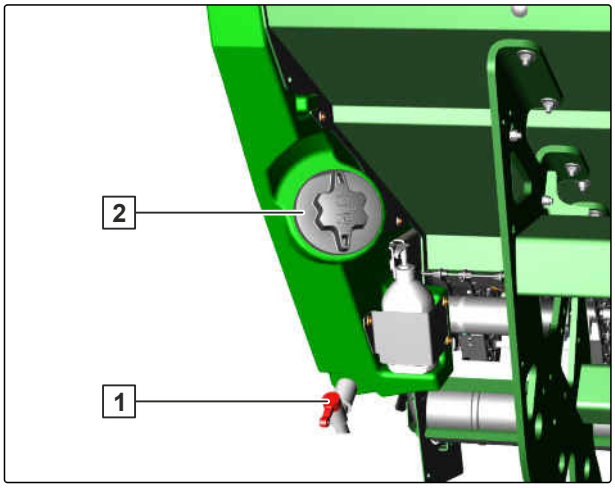

CMS-I-00005772

10.3 Lubricating the implement

CMS-T-00008505-A.1

IMPORTANT

Implement damage due to improper lubrication

- Lubricate the implement at the marked lubrication points as specified in the lubrication schedule.
- *To ensure that contamination is not pressed into the lubrication points,* carefully clean the grease nipples and the grease gun.
- Only lubricate the implement with the lubricants listed in the technical data.
- Press all the spent grease completely out of the bearings.

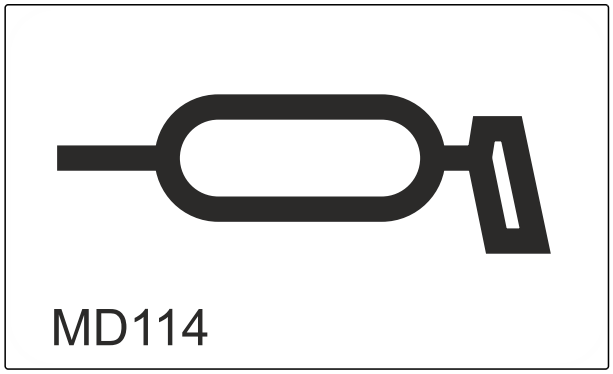

CMS-I-00002270

10.3.1 Overview of lubrication points

CMS-T-00008506-A.1

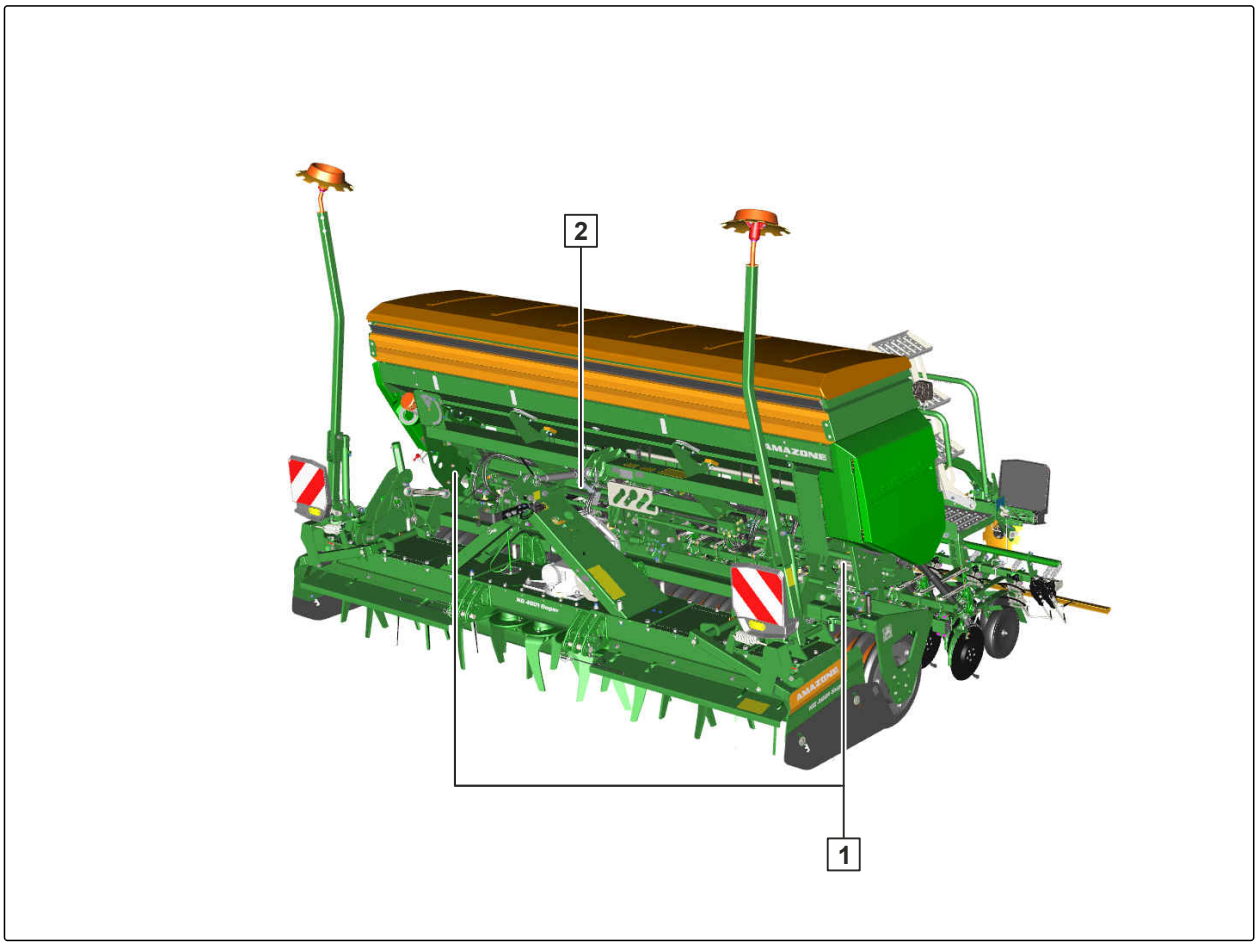

CMS-I-00005774

Every 100 operating hours

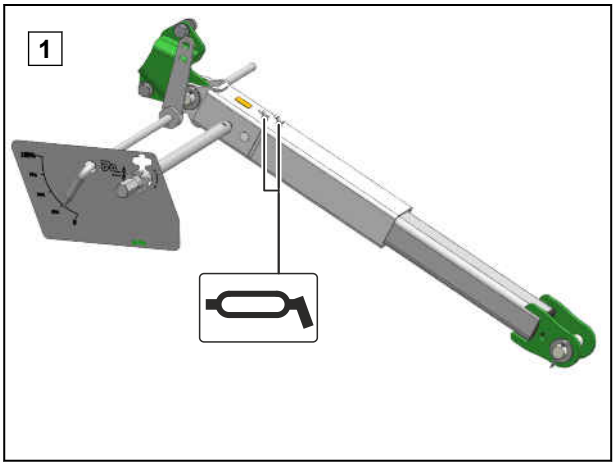

CMS-I-00005328

Cataya 3000 and Cataya 4000

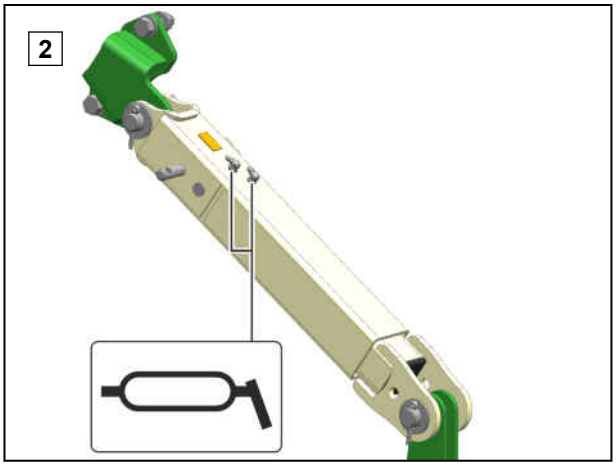

CMS-I-00003231

Cataya 4000

10.4 Lubricating chain drives

CMS-T-00009172-A.1

IMPORTANT

Implement damage due to improper lubrication

- Lubricate the implement at the marked lubrication points as specified in the lubrication schedule.
- Before lubrication, clean the chain only with a penetrating oil and a brush.
- Only lubricate the implement with the lubricants listed in the technical data.
- Do not allow lubricants to drip off of chains.

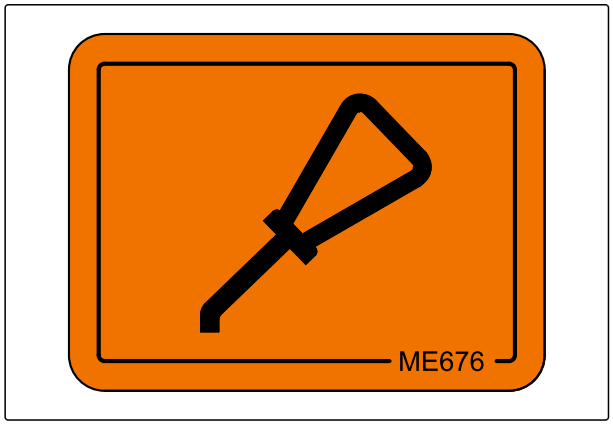

CMS-I-00001879

10.4.1 Lubricating the drive chain on the left metering drive

CMS-T-00009173-A.1

INTERVAL

- After the first 10 operating hours
- Every 50 operating hours

  or

  at the end of the season

1. Fit the universal operating tool [1] on the locking mechanism [2].
2. *To unlock the cover of the chain drive:*
   Turn the universal operating tool clockwise.

➡ The cover of the chain drive can be opened.

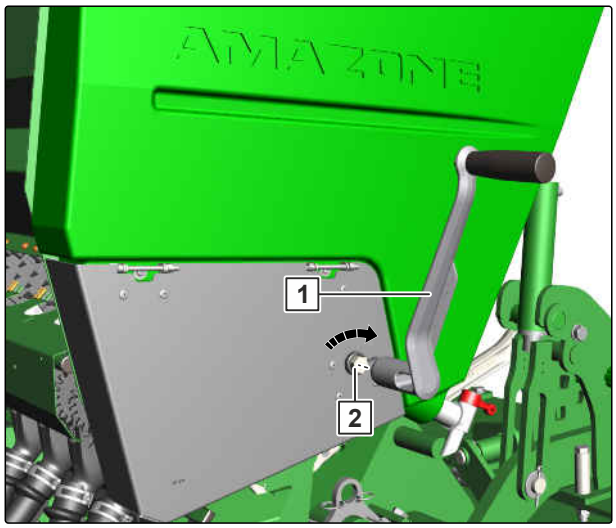

CMS-I-00005741

3. Lubricate the drive chain 1 from inside to outside.

4. Check chain tensioner 2 for ease of movement.

5. Close the cover of the chain drive.

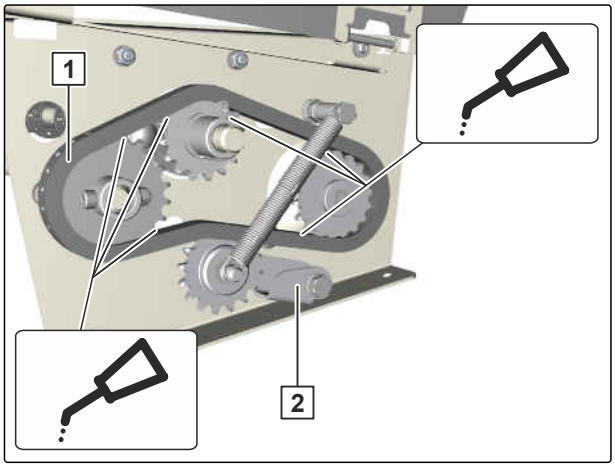

CMS-I-00006271

10.4.2 Lubricating the drive chain on the right metering drive

CMS-T-00009174-A.1

INTERVAL

- After the first 10 operating hours
- Every 50 operating hours

  or

  at the end of the season

1. Fit the universal operating tool 3 on the locking mechanism 2.

2. *To unlock the cover 1 of the chain drive:*
   Turn the universal operating tool clockwise.

➡ The cover of the chain drive can be opened.

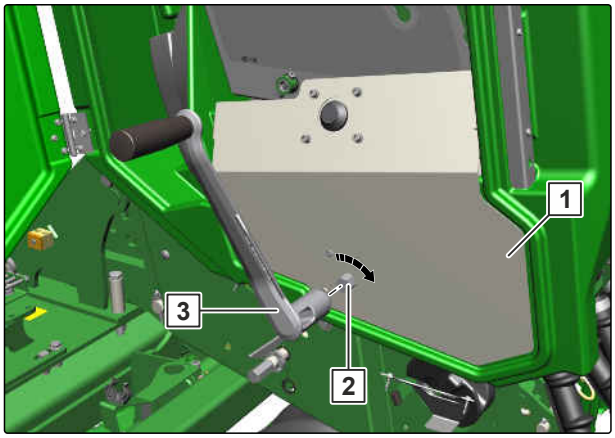

CMS-I-00005793

3. Flip up the cover 1 of the chain drive.

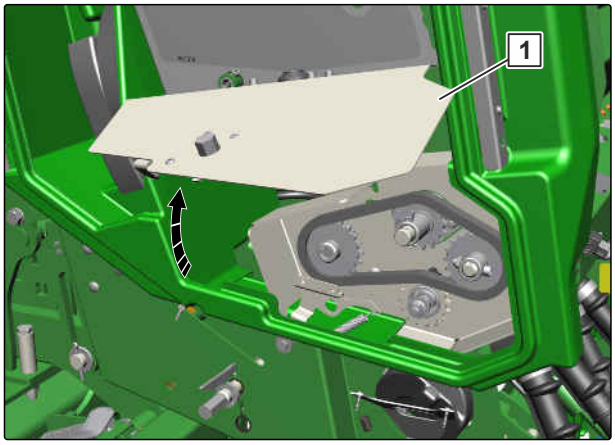

CMS-I-00005809

4. Lubricate the drive chain **2** from inside to outside.

5. Check chain tensioner **1** for ease of movement.

6. Close the cover of the chain drive.

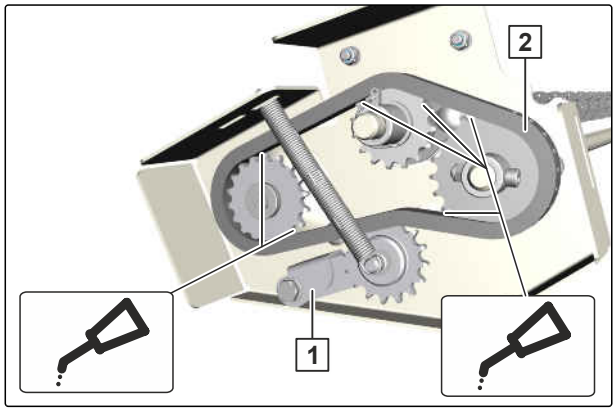

CMS-I-00006269

Loading the implement

11

CMS-T-00008508-A.1

11.1 Lifting the implement

CMS-T-00008509-A.1

The implement has 3 attachment points for lifting slings.

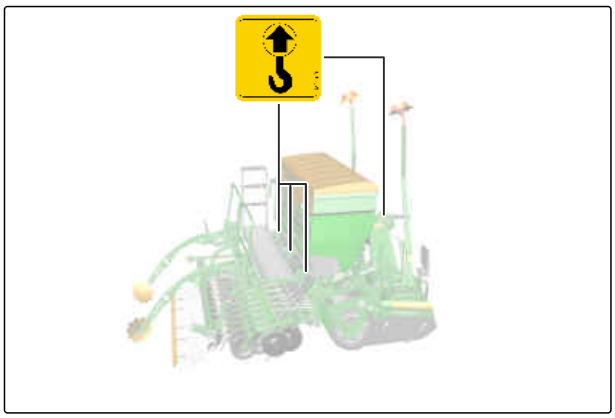

CMS-I-00005775

WARNING

Risk of accident due to improperly attached sling gear for lifting

If slings are not attached at the marked attachment points, the implement can be damaged at lifting, which can impair safety.

- Only attach the sling gear for lifting at the marked attachment points.

Required load-bearing capacity per sling	8,818.49 lb (4,000 kg)

1. Attach the slings for lifting on the intended attachment points.

2. Slowly lift the implement.

11.2 Lashing the implement

CMS-T-00008510-A.1

The implement has 3 lashing points for lashing straps.

WARNING

Risk of accident due to improper lashing

- Never lash the implement with the parking supports or jacks.

WARNING

Risk of accident due to improperly attached lashing straps

If lashing straps are not attached at the marked lashing points, the implement can be damaged when lashing, and this may endanger safety.

- Attach the lashing straps only at the marked lashing points.

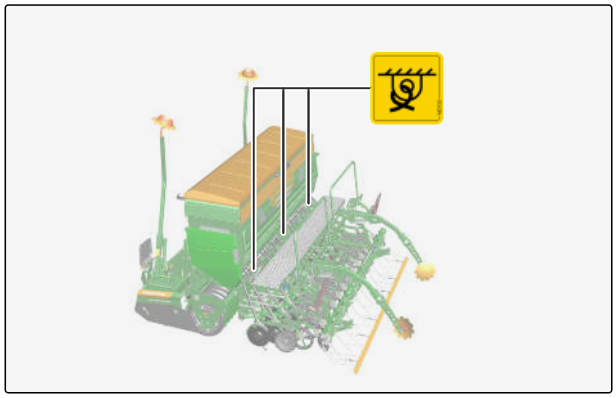

CMS-I-00007598

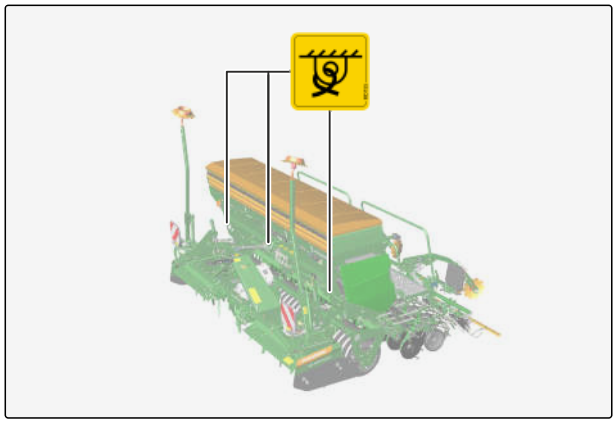

CMS-I-00007602

REQUIREMENTS

✓ The Cataya pack top seed drill is coupled with a soil tillage implement

1. Place the implement on the transport vehicle.
2. Attach the lashing straps at the marked lashing points.
3. Lash the implement in compliance with the national regulations for securing loads.

Appendix

12

CMS-T-00008511-A.1

12.1 Bolt tightening torques

CMS-T-00008512-A.1

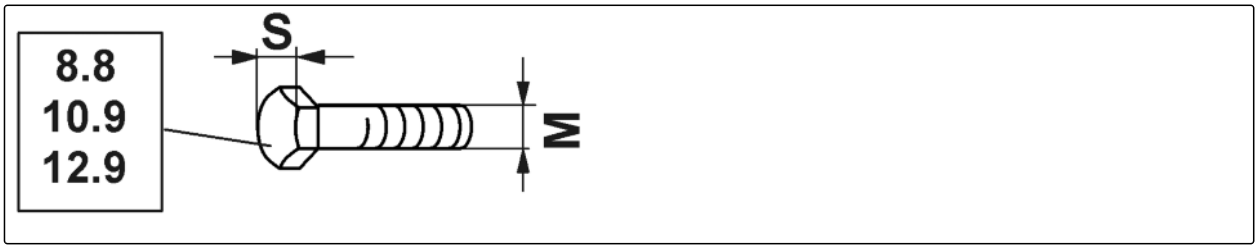

CMS-I-000260

NOTE

Unless otherwise specified, the bolt tightening torques listed in the table apply.

M	S	Nm		
		8.8	**10.9**	**12.9**
M8	13	25	35	41
M8x1		27	38	41
M10	16(17)	49	69	83
M10x1		52	73	88
M12	18(19)	86	120	145
M12x1.5		90	125	150
M14	22	135	190	230
M14x1.5		150	210	250
M16	24	210	300	355
M16x1.5		225	315	380
M18	27	290	405	485
M18x1.5		325	460	550
M20	30	410	580	690
M20x1.5		460	640	770

M	S	Nm		
		8.8	10.9	12.9
M22	32	550	780	930
M22x1.5		610	860	1050
M24	36	710	1000	1200
M24x2		780	1100	1300
M27	41	1050	1500	1800
M27x2		1150	1600	1950
M30	46	1450	2000	2400
M30x2		1600	2250	2700

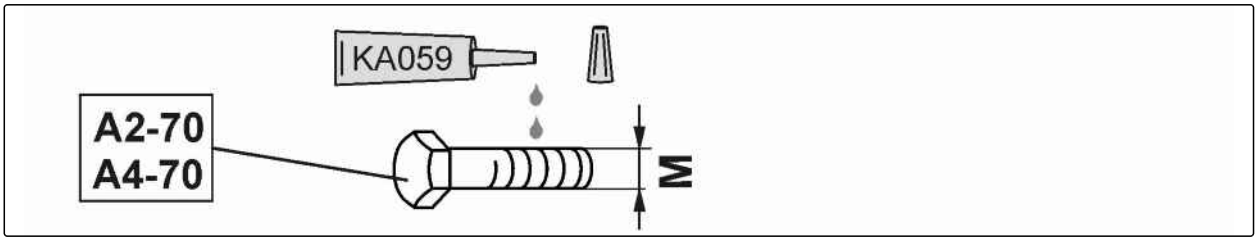

CMS-I-00000065

M	M4	M5	M6	M8	M10	M12	M14	M16	M18	M20	M22	M24
Nm	2.4	4.9	8.4	20.4	40.7	70.5	112	174	242	342	470	589

12.2 Other applicable documents

CMS-T-00008513-A.1

- Tractor operating manual
- Soil tillage implement operating manual
- ISOBUS software operating manual
- AmaDrill software operating manual
- Control terminal operating manual

Directories

13

13.1 Glossary

CMS-T-00000513-B.1

I

Implement

Mounted implements are accessories of the tractor. However, mounted implements are always referred to as implements in this operating manual.

O

Operating material

Operating materials are used for operational readiness. Operating materials include cleaning agents and lubricants, such as lubricating oil, greases or cleaning products.

T

Tractor

In this operating manual, the designation tractor is always used, even for other agricultural towing machines. Implements are mounted on the tractor or towed by the tractor.

13.2 Index

checking
TwinTeC depth control wheel scraper 135

replacing
TwinTeC depth control wheel scraper 135

3

3-point mounting frame
coupling 50

A

Address
Technical Editing organization 4

adjusting
Adjusting the working depth of the harrow tines on the roller harrow 69
Agitator shaft support 101
Bottom flap 100
Exact following harrow tines 65
Fill level sensor 54
Harrow angle on the coulter harrow 62
Harrow height on the coulter harrow 63
Hydraulic coulter pressure on the RoTeC coulter 60
Hydraulic coulter pressure on the TwinTeC coulter 60
Manual coulter pressure adjustment on the RoTeC coulter 59
Manual coulter pressure adjustment on the TwinTeC coulter 59
Manual pressure adjustment of the exact following harrow 65
Pitch of the harrow tines on the roller harrow 69
Placement depth on the RoTec coulter 58
Placement depth on the TwinTeC coulter 58
Roller contact pressure of the roller harrow 70
Sliding shutters 101
Track disk pitch 73
Track width of the tramline marker 71
TwinTeC cutting disk spacing 133

Agitator shaft support
adjusting 101

attaching
Seed guide elements 56

Auxiliary material 32

B

Bolt tightening torques 152

Bottom flap
adjusting 100

C

Cabinet for supply lines
Position 20

calibrating
Metering unit 102

Camera system
connecting 49
Description 34

Chain drive cover
Description 24

checking
Cutting disks 140
Home position of the bottom flaps 143
Hydraulic hose lines 142
Lower link pin 142
Placement depth 112
RoTeC depth control disks 136
RoTeC depth control wheels 136
RoTeC furrow former 143
Tightening torque of the radar sensor bolts 138
Top link pin 142
TwinTeC cutting disks 134
TwinTeC cutting disk spacing 133
TwinTeC depth control wheel 136

cleaning
Implement 131

connecting
Camera system 49

Contact data
Technical Editing organization 4

Control computer
Coupling the line 47
Uncoupling the line 126

Coulter harrow
adjusting 62
Adjusting the harrow angle 62
Adjusting the harrow height 63
Deactivating the harrow tines 63
Description 38

Coulter pressure
Hydraulic adjustment 60
manual adjustment 59

coupling
Hydraulic hose lines 47
Pack top seed drill 50

Coupling of the driven seeding shaft
removing 82

Cutting disks
checking 140
replacing 140

D

Documents 32

Drivable slope inclination 42

E

emptying
Hopper 121
Metering unit 121

Exact following harrow
bringing into transport position 106
bringing into working position 64, 110
Description 38
lifting out 68
Manual pressure adjustment of the exact following harrow 65
Position 20

Exact following harrow pressure
Hydraulic adjustment 67

Exact following harrow tines
adjusting 65

F

Faults
rectifying 114

filling
Hopper 57

Fill level sensor
adjusting 54

Front axle load
calculating 44

Front ballasting
calculating 44

Function of the implement
Description 21

G

GewindePack
Description 32

Grating screen
Description 23

GreenDrill
Description 40

H

Hand wash tank
Description 32

Home position of the bottom flaps
checking 143

Hopper cover
operating 54

Hopper
emptying 121
filling 57
Position 20

Hydraulic hose lines
checking 142
coupling 47
uncoupling 125

I

Implement
insert 111
lubricating 145
turning 112

installing
Seeding shaft 95

Intended use 19

ISOBUS
Coupling the line 47
Uncoupling the line 126

L

lifting out
Roller harrow 71

Lighting and identification for road travel
Description 35

loading 150

Loading board
Position 20

Loading board steps
operating 80

Loads
calculating 44

Lower link pin
checking 142

M

Metering unit cover
Description 24

Metering unit
calibrating 102
Description 33
emptying 121
Position 20
Setting values 81

Mounting frame
Description 36

mounting
Tramline metering wheel 73

O

One-sided switching
operating 79

operating
Hopper cover 54
Loading board steps 80
One-sided switching 79

Other applicable documents 153

P

Pack top seed drill
coupling 50
parking 127

parking
Pack top seed drill 127

Permissible payload
calculating 107

Placement depth
adjusting on the RoTeC coulter 58
adjusting on the TwinTeC coulter 58
checking 112

Power supply
coupling 49
uncoupling 126

R

Radar sensor
Checking the tightening torque of the bolts 138
Position 20

Rating plate on the implement
Description 31

Rear axle load
calculating 44

removing
Coupling of the driven seeding shaft 82
Seed shaft driven by electric motor 87

replacing
Cutting disks 140
RoTeC depth control disks 136
RoTeC depth control wheels 136
RoTeC furrow former 143
TwinTeC cutting disks 134
TwinTeC depth control wheel 136

Road safety bars
attaching on the exact following harrow 107
Description 24
removing 109

Roller harrow
Adjusting roller contact pressure 70
Adjusting the harrow tines 69
Adjusting the pitch of the harrow tines 69
Description 39
lifting out 71
Position 20

RoTeC coulter
Adjusting the placement depth 58
Description 36
Furrow former 143
Hydraulic coulter pressure adjustment 60
Manual coulter pressure adjustment 59
Position 20

RoTeC depth control disks
checking 136
replacing 136

RoTeC depth control wheels
checking 136
replacing 136

RoTeC furrow former
checking 143
replacing 143

S

Seed guide elements
attaching 56

Seed harrow
bringing into transport position 106
bringing into working position 64, 110

Seeding combination
uncoupling 127

Seeding shaft
installing 95

Seed shaft driven by electric motor
removing 87

Setting values
selecting 81

Sliding shutters
adjusting 101

SmartCenter
Position 20

Special equipment
Description 22

T

Technical data 41
Capacity characteristics of the tractor 43
Dimensions 41
Drivable slope inclination 42
Hopper volume 41
Noise emission data 42
Permissible mounting categories 42
QuickLink quick-coupling system 41
Soil tillage tools 42

Tire load capacity
calculating 44

Top link pin
checking 142

Total weight
calculating 44

Track marker
Description 40
Position 20

Tractor
calculating the required tractor characteristics 44

Tramline marker
Adjusting the track disk pitch 73
Adjusting track width 71
Description 39
folding on the exact following harrow 106
on the exact following harrow – unfolding 111
on the implement frame – folding 105
on the implement frame – unfolding 111
on the seed harrow – unfolding 111
Position 20

Tramline metering wheel
mounting 73

TwinTec coulter
Adjusting the placement depth 58
Description 37
Hydraulic coulter pressure adjustment 60
Manual coulter pressure adjustment 59
parking 125
Position 20

TwinTeC cutting disks
checking 134
replacing 134

TwinTeC cutting disk spacing
adjusting 133
checking 133

TwinTeC depth control wheel
checking 136
replacing 136

TwinTeC depth control wheel scraper
checking 135
replacing 135

U

uncoupling
Seeding combination 127

unfolding
Tramline marker on the exact following harrow 111
Tramline marker on the implement frame 111
Tramline marker on the seed harrow 111

Universal operating tool
Description 33

unloading 150

W

Warning symbols
Description *27*
Positions *25*
Structure *27*

Working depth
adjusting the harrow tines on the roller harrow *69*

Working position sensor
adjusting *53*

Work lights
Description *35*

AMAZONEN-WERKE
H. DREYER SE & Co. KG
Postfach 51
49202 Hasbergen-Gaste
Germany

+49 (0) 5405 501-0
amazone@amazone.de
www.amazone.de