Operating Manual

AMAZONE

Pantera 4504
with Comfort Package

Self-propelled field sprayer

(Euro 3A / Euro 5 Emission Standard)

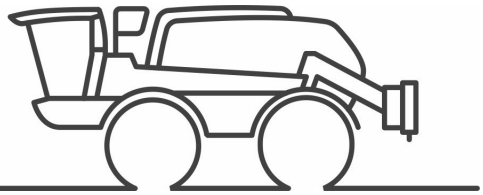

MG7124
BAG0224.7 01.24
Printed in Germany

SmartLearning

Please read this operating manual before commissioning. Keep it in a safe place for future use.

en

Reading the instruction

manual and to adhere to it should not appear to be inconvenient and superfluous as it is not enough to hear from others and to realise that a machine is good, to buy it and to believe that now everything would work by itself. The person concerned would not only harm himself but also make the mistake of blaming the machine for the reason of a possible failure instead of himself. In order to ensure a good success one should go into the mind of a thing or make himself familiar with every part of the machine and to get acquainted with its handling. Only this way, you would be satisfied both with the machine as also with yourself. To achieve this is the purpose of this instruction manual.

Leipzig-Plagwitz 1872.

Identification data

Please insert the identification data of the machine. The identification data are arranged on the type plate.

Machine ID No.: (10-digit)	
Type:	Pantera 4503
Year of manufacture:	
Basic weight (kg):	
Permissible total weight (kg):	
Maximum load (kg):	
Engine number	

Manufacturer's address

AMAZONEN-WERKE

H. DREYER SE & Co. KG

Postfach 51

D-49202 Hasbergen, Germany

Tel.: + 49 (0) 5405 50 1-0

E-mail: amazone@amazone.de

Spare part orders

Spare parts lists are freely accessible in the spare parts portal at www.amazone.de.

Please send orders to your AMAZONE dealer.

Formalities of the operating manual

Document number: MG7124

Compilation date: 01.24

© Copyright AMAZONEN-WERKE H. DREYER SE & Co. KG, 2024

All rights reserved.

Reprinting, even of sections, permitted only with the approval of AMAZONEN-WERKE H. DREYER SE & Co. KG.

Foreword

Dear Customer,

You have chosen one of the quality products from the wide product range of AMAZONEN-WERKE, H. DREYER SE & Co. KG. We thank you for your confidence in our products.

On receiving the machine, check to see if it has been damaged during transport or if parts are missing. Using the delivery note, check that the machine has been delivered in full, including any special equipment ordered. Damage can only be rectified if problems are signalled immediately.

Before commissioning, read and understand this operating manual, and particularly the safety information. Only after careful reading will you be able to benefit from the full scope of your newly purchased machine.

Please ensure that all the machine operators have read this operating manual before the machine is commissioned.

Should you have any questions or problems, please consult this operating manual or contact your local service partner.

Regular maintenance and timely replacement of worn or damaged parts increases the lifespan of your machine.

User evaluation

Dear Reader,

We update our operating manuals regularly. Your suggestions for improvement help us to create ever more user-friendly manuals.

AMAZONEN-WERKE

H. DREYER SE & Co. KG

Postfach 51

D-49202 Hasbergen, Germany

Tel.: + 49 (0) 5405 50 1-0

E-mail: amazone@amazone.de

1 User Information 10
1.1 Purpose of the document 10
1.2 Locations in the operating manual 10
1.3 Diagrams 10

2 General Safety Instructions 11
2.1 Obligations and liability 11
2.2 Representation of safety symbols 13
2.3 Organisational measures 14
2.4 Safety and protection equipment 14
2.5 Informal safety measures 14
2.6 User training 15
2.7 Safety measures in normal operation 16
2.8 Danger from residual energy 16
2.9 Maintenance and repair work, fault elimination 16
2.10 Design changes 16
2.10.1 Spare and wear parts and aids 17
2.11 Cleaning and disposal 17
2.12 User workstation 17
2.13 Warning symbols and other signs on the machine 18
2.13.1 Positions of warning symbols and other labels 19
2.14 Potential risks from not observing the safety instructions 27
2.15 Safety-conscious working 27
2.16 Safety information for users 28
2.16.1 General safety and accident prevention information 28
2.16.2 Hydraulic system 30
2.16.3 Electrical system 31
2.16.4 Brake system 32
2.16.5 Tyres 32
2.16.6 Field sprayer operation 33
2.16.7 Cleaning, maintenance and repair 35

3 Loading 36

4 Product description 37
4.1 Overview of the assemblies 38
4.2 Operating instructions and third party documentation 39
4.3 Safety and protection equipment 40
4.4 Transportation equipment 41
4.5 Intended use 42
4.6 Regular device inspections 43
4.7 Consequences of using certain crop protection agents 43
4.8 Danger areas and danger points 44
4.9 Rating plate 45
4.10 Conformity 45
4.11 Technically possible maximum application rate 46
4.12 Maximum permissible application rate for crop protection products 47
4.13 Technical data 48
4.13.1 Dimensions 48
4.13.2 Payload 48
4.13.3 Technical data spraying system 52
4.13.4 Residual amounts 54
4.13.5 Technical data, carrier vehicle 56
4.13.6 Emission values according to noise and vibration health & safety regulations 57

5 Structure and function, carrier vehicle ... 58

5.1 Drive ... 58
5.1.1 Driving-in the engine ... 58
5.1.2 Engine fuel system ... 59
5.2 Exhaust gas treatment ... 61
5.2.1 Diesel particle filter ... 61
5.2.2 Reduction of the nitrogen oxides in the exhaust gas (SCR) ... 62
5.3 Running gear ... 63
5.3.1 Hydraulic track width adjustment ... 63
5.4 Pantera-W with maximum track width of 3 metres ... 64
5.5 Pantera H with hydraulic height adjustment ... 65
5.6 Steering ... 66
5.6.1 Perform a track correction ... 67
5.7 Traction control system ... 68
5.8 Wheel gears ... 68
5.9 Mudguards ... 68
5.10 Hydro-pneumatic spring suspension ... 69
5.11 Folding wheel chock ... 70
5.12 Hydraulic system ... 71
5.12.1 Hydraulic pumps ... 71
5.12.2 Hydraulic wheel motors and gearbox ... 71
5.12.3 Hydraulic oil tank ... 71
5.13 Radiator ... 72
5.14 Driver's cabin ... 73
5.14.1 Foldable access ladder ... 74
5.14.2 Steering column with multi-function switch and brake pedal ... 75
5.14.3 Adjusting the driver's seat ... 77
5.14.4 Control panel ... 78
5.14.5 Operating elements, Comfort and Light ... 80
5.14.6 Operating elements, Safety and Maintenance ... 80
5.14.7 Rear right side in the cabin ... 81
5.14.8 Armrest ... 82
5.14.9 Cooling compartment and ashtray ... 83
5.14.10 AmaTron / AmaPad control terminal to control the field sprayer ... 83
5.14.11 Driving lever with multi-function stick ... 84
5.14.12 Air conditioner ... 87
5.14.13 Tractor cab air filtration with Category 4 safety status ... 89
5.14.14 Covers and compartments outside the cab ... 92
5.15 Camera system (option) ... 93
5.16 Working platform with ladder ... 94
5.17 Manoeuvring device for trailers ... 96

6 Construction and function of the field sprayer ... 97

6.1 Functionality of the field sprayer ... 97
6.2 Overview control terminal ... 98
6.3 Induction bowl ... 102
6.3.1 Switch taps on the induction bowl ... 103
6.4 Suction hose for filling the spray liquid tank / flushing water tank ... 104
6.5 Filling connection for pressure filling of the spray liquid tank or flushing water tank ... 105
6.6 Filter equipment ... 106
6.7 Flushing water tank ... 109
6.8 Hand washing facilities ... 109
6.9 Pump equipment ... 110
6.10 Application rate increase with HighFlow ... 111
6.11 Sprayer boom ... 112
6.11.1 Super-L boom ... 114

6.11.2 Sprayer boom with Flex-folding 117
6.11.3 Reduction joint on the outer boom (optional) 119
6.12 Spray lines 120
6.13 Nozzles 122
6.13.1 Multiple nozzles 122
6.13.2 Edge nozzles 125
6.14 Automatic single nozzle control (optional) 126
6.14.1 Single nozzle control AmaSwitch 126
6.14.2 4-way AmaSelect single nozzle control 126
6.15 Special optional equipment for liquid fertiliser 128
6.15.1 Three-ray nozzles 128
6.15.2 7 hole nozzles / FD nozzles (optional) 129
6.16 Drag hose equipment for Super-L boom (optional) 130
6.17 External washing unit 131
6.18 Lift module 132
6.19 Control terminal cover 133
6.20 Accessories for protecting the plants 134
6.21 Personal protective equipment Safety Kit 134

7 AmaDrive vehicle terminal 135

7.1 Work screen 135
7.2 Indicator lights 135
7.3 Quick adjustment of the cruise control 137
7.4 Quick adjustment of the track width 138
7.5 Buttons 139
7.6 Submenus 142
7.6.1 Drive settings 142
7.6.2 Running gear settings 143
7.6.3 Work lights 144
7.6.4 General settings 145
7.7 Status line 148
7.7.1 Configuring the status line 149
7.7.2 Changing from day view to night view 149
7.7.3 Showing the operating data 149

8 TwinTerminal for Comfort Package on the control panel 150

9 Start-up 153

9.1 Antifreeze in the spray liquid tank 153
9.2 Securing machine against accidental starting and rolling 153

10 Driving on public roads 154

10.1 Requirements for driving on public roads 156

11 Driving with the Pantera 157

11.1 Entering and exiting the cab 157
11.2 Starting the engine 157
11.3 Driving with the machine 158
11.3.1 Road travelling / field travelling 159
11.4 Stopping the engine 160

12 Using the field sprayer 161

12.1 Preparing the spray liquid 162
12.1.1 Calculating the filling and re-fill quantity 166
12.1.2 Filling table for remaining spray area 167
12.1.3 TwinTerminal filling diagram 168
12.1.4 Filling the spray liquid tank and flushing water tank through the suction connection 169
12.1.5 Filling the spray liquid tank and flushing water tank through the DK pressure connection 172

12.1.6 Filling the flushing water tank through the FS pressure connection ... 173
12.1.7 Adjusting the agitator ... 173
12.1.8 Flushing agents via the induction bowl ... 174
12.1.9 Spray agent suction from containers (closed transfer system) ... 176

12.2 Spraying operation ... 177
12.2.1 Applying the spray liquid ... 179
12.2.2 Drift reduction measures ... 180
12.2.3 Diluting the spray liquid with flushing water ... 181

12.3 Residual amounts ... 182
12.3.1 Disposing of the residues ... 182
12.3.2 Emptying the spray liquid tank using the pump ... 183

12.4 Cleaning the implement after operation ... 184
12.4.1 Quick cleaning of the empty field sprayer ... 185
12.4.2 Intensive cleaning of the empty field sprayer ... 186
12.4.3 Draining the final residue ... 187
12.4.4 Performing chemical cleaning ... 188
12.4.5 Cleaning the suction filter and pressure filter ... 189
12.4.6 External cleaning ... 191
12.4.7 Cleaning the sprayer during a critical agent change ... 192
12.4.8 Contact of the implement with liquid fertiliser ... 192
12.4.9 Flushing the sprayer boom when the spray liquid tank is full ... 193

13 Faults ... 194

13.1 Towing the implement ... 194

13.2 Malfunctions during spraying operation ... 196
13.2.1 Eliminate the blockages in the nozzles and nozzle filters ... 197

14 Cleaning, maintenance and repair ... 198

14.1 Cleaning ... 200

14.2 Winter storage and long periods out of operation ... 201

14.3 Maintenance schedule ... 206

14.4 Maintenance work with the engine running ... 212

14.5 Hydro-pneumatic pressure reservoir ... 212

14.6 Lubrication specifications ... 213
14.6.1 Central lubrication ... 216

14.7 Maintenance of the carrier vehicle ... 217
14.7.1 Oils and operating fluids ... 217
14.7.2 Cleaning the engine cooler and air conditioning condenser ... 219
14.7.3 Air intake system of the engine ... 219
14.7.4 Cooling system of the engine ... 219
14.7.5 Wheel gears ... 220
14.7.6 Tyres / wheels ... 221
14.7.7 Brakes ... 223
14.7.8 Compressed air system for trailer brake ... 225
14.7.9 Hydraulic system ... 226
14.7.10 Hydraulic oil ... 230
14.7.11 Cab ... 232
14.7.12 Air conditioner ... 236

14.8 Maintenance the field sprayer ... 239
14.8.1 Settings on the unfolded sprayer boom ... 239
14.8.2 Electro hydraulic boom ... 240

14.9 Pumps ... 241
14.9.2 Checking and replacing the suction and pressure-side valves (workshop work) ... 243
14.9.3 Checking and replacing the piston diaphragm (workshop work) ... 244

14.10 Checking hoses that convey spray liquid ... 246

14.11 Calibrate the flow meter ... 247

14.12 Eliminating limescale in the system ... 248

14.13 Metering the field sprayer ... 250

14.14 Nozzles ... 252

14.14.1 Line filter....253
14.14.2 Instructions on testing the field sprayer....254

15 Diagrams and overviews....257

15.1 Liquid circuit....257
15.2 Liquid circuit Comfort package 1 / part-width section control....258
15.3 Liquid circuit Comfort package / part width section control....259
15.4 Overview of fuses and relay....260
15.4.1 Fuses on the central electrics under the arm rest....260
15.4.2 Fuses and relay in the cabin roof....265
15.4.3 New relay behind the seat....268
15.4.4 Boom fuses and relays on the control panel....269
15.4.5 Boom illumination in the cab, rear right....270
15.4.6 AmaSelect fuses on the boom....271
15.5 Screw tightening torques....272

16 Spray table....273

16.1 Spray tables for flat-fan, anti-drift, injector and airmix nozzles, spraying height 50 cm....273
16.2 Spraying nozzles for liquid manure....277
16.2.1 Spray table for three-ray nozzles, spraying height 120 cm....277
16.2.2 Spray table for 7-hole nozzles....278
16.2.3 Spray table for FD- nozzles....280
16.2.4 Spray table for drag hose unit....281
16.3 Conversion table for spraying ammonium nitrate / urea solution (AUS) liquid fertiliser....284

1 User Information

The User Information section provides information on use of the operating manual.

1.1 Purpose of the document

This operating manual

- describes the operation and maintenance of the machine.
- provides important information on safe and efficient handling of the machine.
- is a component part of the machine and should always be kept with the machine or the towing vehicle.
- Keep it in a safe place for future use.

1.2 Locations in the operating manual

All the directions specified in the operating manual are always seen in the direction of travel.

1.3 Diagrams

Instructions and responses

Activities to be carried out by the user are given as numbered instructions. Always keep to the order of the instructions. The reaction to instructions is given by an arrow.

Example:

1. Instruction 1

→ Machine response to instruction 1

2. Instruction 2

Lists

Lists without an essential order are shown as a list with bullets.

Example:

- Point 1
- Point 2

Item numbers in diagrams

Numbers in round brackets refer to items in diagrams. The first number refers to the diagram and the second number to the item.

Example: (Fig. 3/6)

- Figure 3
- Item 6

2 General Safety Instructions

This section contains important information on safe operation of the machine.

2.1 Obligations and liability

Comply with the instructions in the operating manual

Knowledge of the basic safety information and safety regulations is a basic requirement for safe handling and fault-free machine operation.

Obligations of the operator

The operator is obliged only to let those people work with/on the machine who

- are aware of the basic workplace safety information and accident prevention regulations.
- have been instructed in working with/on the machine.
- have read and understood this operating manual.

The operator is obliged

- to keep all the warning symbols on the machine in a legible state.
- to replace damaged warning symbols.

If you still have queries, please contact the manufacturer.

Obligations of the user

Before starting work, anyone charged with working with/on the machine is obliged

- to comply with the basic workplace safety instructions and accident prevention regulations.
- to read and follow the "General safety information" section of this operating manual.
- to read the section "Warning symbols and other labels on the machine" (page 18) of this operating manual and to follow the safety instructions represented by the warning symbols when operating the machine.
- To get to know the machine.
- To read the sections of this operating manual, important for carrying out your work.

If the user discovers that a function is not working properly, then they must eliminate this fault immediately. If this is not the task of the user or if the user does not possess the appropriate technical knowledge, then they should report this fault to their superior (operator).

Risks in handling the machine

The machine has been constructed to the state-of-the art and the recognised rules of safety. However, operating the machine may cause risks and restrictions to

- the health and safety of the user or third parties,
- the machine,
- other property.

Only use the machine

- for the purpose for which it was intended.
- in a perfect state of repair.

Eliminate any faults immediately which could impair safety.

Guarantee and liability

Our "General conditions of sales and delivery" are always applicable. These shall be available to the operator, at the latest on conclusion of the contract. Guarantee and liability claims for damage to people or property will be excluded if they can be traced back to one or more of the following causes:

- Improper use of the machine.
- Improper installation, commissioning, operation and maintenance of the machine.
- Operation of the machine with defective safety equipment or improperly attached or non-functioning safety equipment.
- Non-compliance with the instructions in the operating manual regarding commissioning, operation and maintenance.
- Unauthorised design changes to the machine.
- Insufficient monitoring of machine parts which are subject to wear.
- Improperly executed repairs.
- Disasters through the impact of foreign bodies and Acts of God.

2.2 Representation of safety symbols

Safety instructions are indicated by the triangular safety symbol and the highlighted signal word. The signal word (danger, warning, caution) describes the severity of the risk, and carries the following meaning:

DANGER

Indicates an immediate high risk which will result in death or serious physical injury (loss of body parts or long term damage) if not avoided.

If the instructions are not followed, then this will result in immediate death or serious physical injury.

WARNING

Indicates a medium risk, which could result in death or (serious) physical injury if not avoided.

If the instructions are not followed, then this may result in death or serious physical injury.

CAUTION

Indicates a low risk which could cause minor or medium level physical injury or damage to property if not avoided.

IMPORTANT

Indicates an obligation to special behaviour or an activity required for proper machine handling.

Non-compliance with these instructions can cause faults on the machine or disturbance to the environment.

NOTE

Indicates handling tips and particularly useful information.

These instructions will help you to use all the functions of your machine in the best way possible.

2.3 Organisational measures

The operator must provide the necessary personal protective equipment as per the information provided by the manufacturer of the crop protection agent to be used, such as:

- Safety glasses;
- Protective shoes
- Chemical-resistant overalls,
- Skin protection agents, etc.

The operating manual

- Must always be kept at the place at which the machine is operated.
- Must always be easily accessible for the user and maintenance personnel.

Check all the available safety equipment regularly.

2.4 Safety and protection equipment

Before starting up the machine each time, all the safety and protection equipment must be properly attached and fully functional. Check all safety and protection equipment regularly.

Faulty safety equipment

Faulty or disassembled safety and protection equipment can lead to dangerous situations.

2.5 Informal safety measures

As well as all the safety information in this operating manual, comply with the general, national regulations pertaining to accident prevention and environmental protection.

When driving on public roads and routes you should comply with the statutory road traffic regulations.

2.6 User training

Only those people who have been trained and instructed may work with/on the machine. The operator must clearly specify the responsibilities of the people charged with operation and maintenance work.

People being trained may only work with/on the machine under the supervision of an experienced person.

Activity \ Person	Person specially trained for the activity [1]	Trained person [2]	Persons with specialist training (specialist workshop) [3]
Loading/Transport	X	X	X
Start-up	--	X	--
Set-up, tool installation	--	--	X
Operation	--	X	--
Maintenance	--	--	X
Troubleshooting and fault elimination	--	X	X
Disposal	X	--	--

Legend: X..permitted --..not permitted

[1] A person who can assume a specific task and who can carry out this task for an appropriately qualified company.

[2] Instructed persons are those who have been instructed in their assigned tasks and in the possible risks in the case of improper behaviour, have been trained if necessary, and have been informed about the necessary protective equipment and measures.

[3] People with specialist technical training shall be considered as a specialist. Due to their specialist training and their knowledge of the appropriate regulations, they can evaluate the work with which they have been charged and detect possible dangers.

Comment:

A qualification equivalent to specialist training can be obtained from several years' experience in the relevant field.

If maintenance and repair work on the machine is additionally marked "Workshop work", only a specialist workshop may carry out such work. The personnel of a specialist workshop shall possess the appropriate knowledge and suitable aids (tools, lifting and support equipment) for carrying out the maintenance and repair work on the machine in a way which is both appropriate and safe.

2.7 Safety measures in normal operation

Only operate the machine if all the safety and protection equipment is fully functional.

Check the machine at least once a day for visible damage and check the function of the safety and protection equipment.

2.8 Danger from residual energy

Note that there may be residual mechanical, hydraulic, pneumatic and electrical/electronic energy on the machine.

Use appropriate measures to inform the operating personnel. You can find detailed information in the relevant sections of this operating manual.

2.9 Maintenance and repair work, fault elimination

Carry out prescribed setting, maintenance and inspection work in good time.

Secure all media such as compressed air and the hydraulic system against unintentional start-up.

Carefully fix and secure larger assemblies to lifting gear when carrying out replacement work.

Regularly check that bolted connections are firmly secured and tighten if necessary.

When the maintenance work is completed, check the function of the safety devices.

2.10 Design changes

You may make no changes, expansions or modifications to the machine without the authorisation of AMAZONEN-WERKE. This also applies when welding support parts.

Any expansion or modification work shall require the written approval of AMAZONEN-WERKE. Only use modification and accessory parts approved by AMAZONEN-WERKE so that the type approval, for example, remains valid in accordance with national and international regulations.

Vehicles with an official type approval or with equipment connected to a vehicle with a valid type approval or approval for road transport according to the German road traffic regulations must be in the state specified by the approval.

WARNING

Risk of crushing, cutting, being trapped or drawn in, or impact through the failure of support parts.

It is strictly forbidden to

- drill holes in the frame or on the running gear.
- increase the size of existing holes on the frame or the running gear.
- weld support parts.

2.10.1 Spare and wear parts and aids

Immediately replace any machine parts which are not in a perfect state.

Only use genuine AMAZONE spare and wear parts, or those approved by AMAZONEN-WERKE, so that the type approval remains valid according to the national and international regulations. If you use wear and spare parts from third parties, there is no guarantee that they have been designed and manufactured in such a way as to meet the requirements placed on them.

AMAZONEN-WERKE shall accept no liability for damage caused by the use of non-approved spare and wear parts or aids.

2.11 Cleaning and disposal

Handle and dispose of any materials used carefully, in particular

- when carrying out work on lubrication systems and equipment and
- when cleaning using solvents.

2.12 User workstation

The machine may only be operated by one person sitting in the driver's seat of the tractor.

Otherwise no other person must remain in the cabin or on the machine when driving.

The helpers seat must only be used for manoeuvring trips.

Drive the machine only when wearing the seat belt.

2.13 Warning symbols and other signs on the machine

Always keep all the warning pictograms of the machine clean and in a legible state. Replace illegible warning pictograms. You can obtain the warning symbols from your dealer using the order number (e.g. MD 078).

Warning symbols - structure

Warning symbols indicate danger areas on the machine and warn against residual dangers. At these points, there are permanent or unexpected dangers.

A warning symbol consists of two fields:

Field 1

is a symbol describing the danger, surrounded by triangular safety symbol.

Field 2

is a symbol showing how to avoid the danger.

Warning symbols - explanation

The column **Order number and explanation** provides an explanation of the neighbouring warning symbol. The description of the warning symbols is always the same and specifies, in the following order:

1. A description of the danger.

   For example: risk of cutting

2. The consequence of non-compliance with the risk avoidance instructions.

   For example: causes serious injuries to fingers or hands.

3. Risk avoidance instructions.

   For example: only touch machine parts when they have come to a complete standstill.

2.13.1 Positions of warning symbols and other labels

Warning symbols

The following diagrams show the arrangement of the warning symbols on the machine.

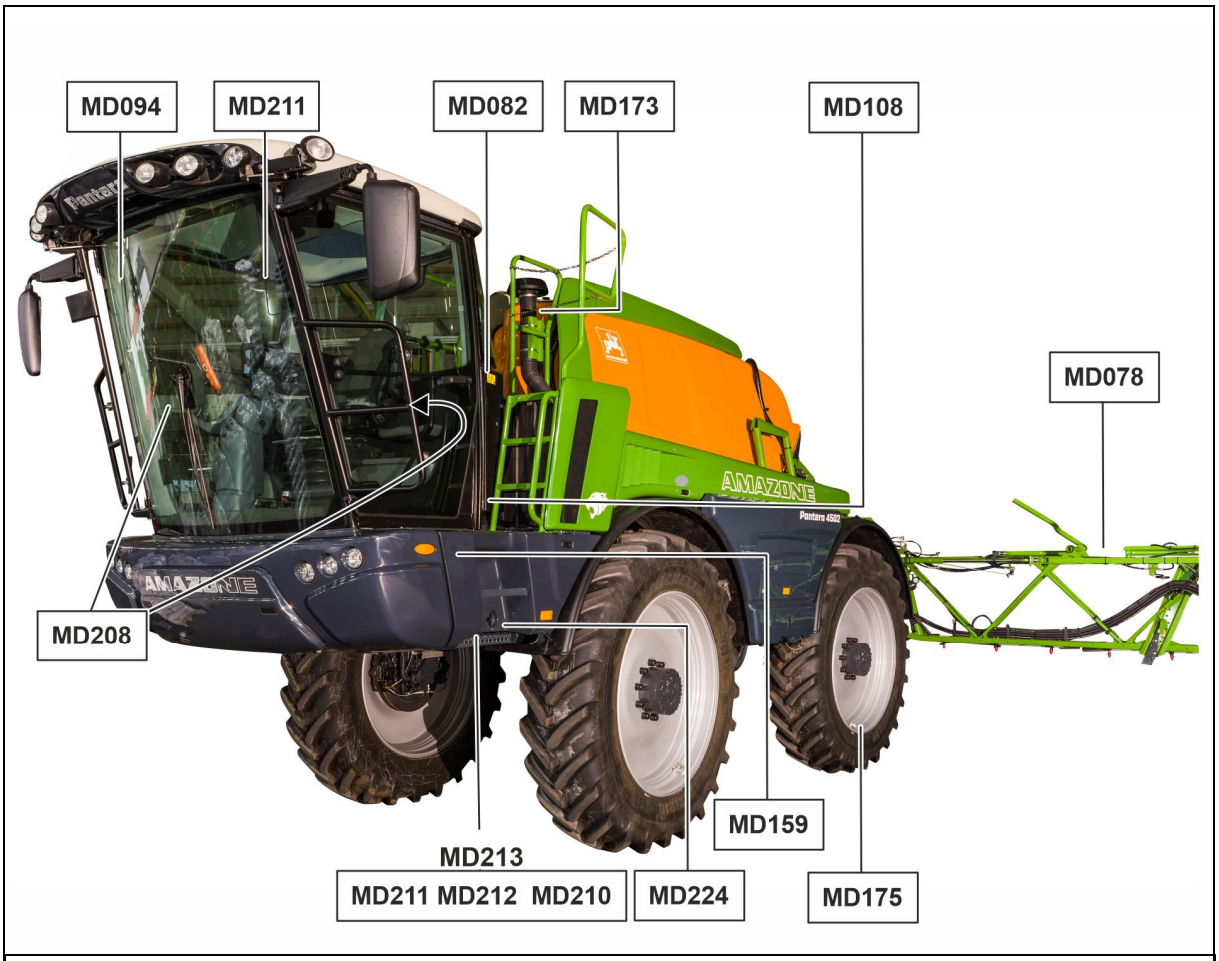

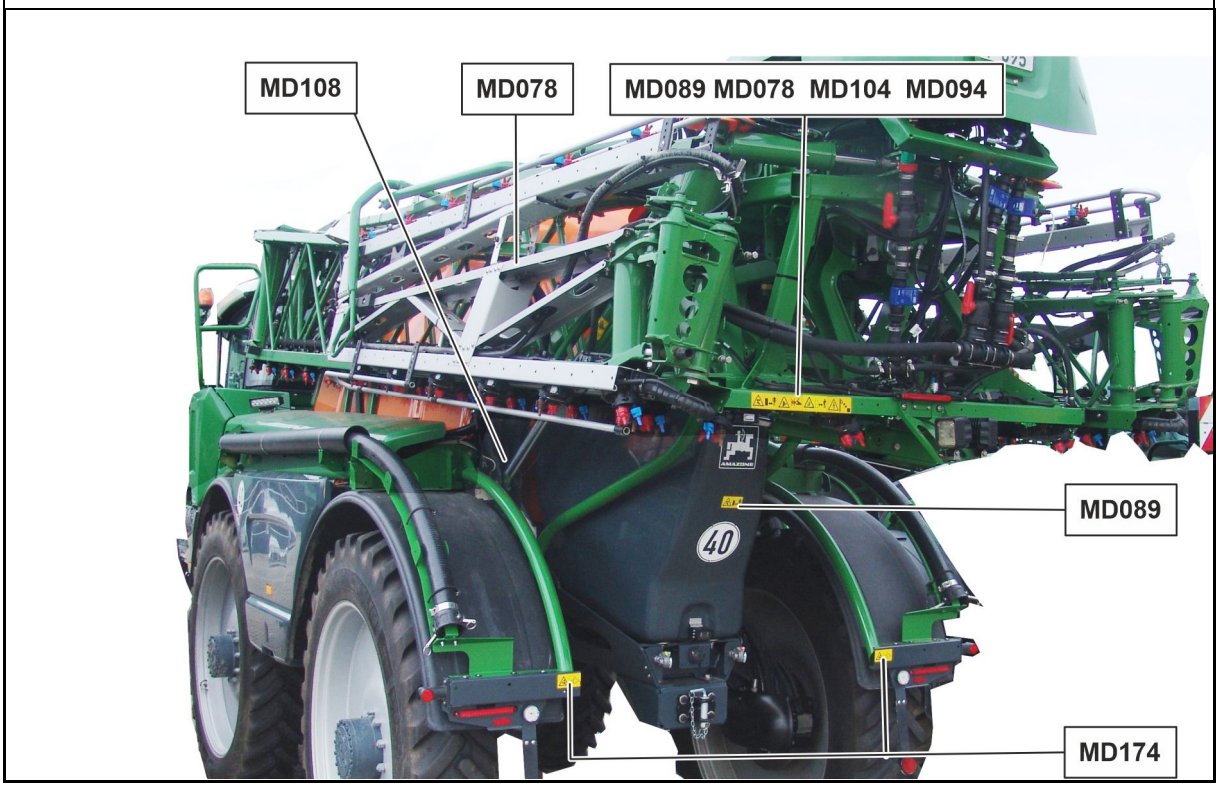

MD192

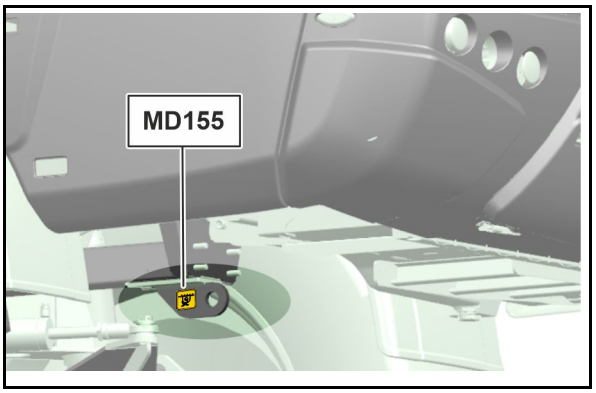
MD155

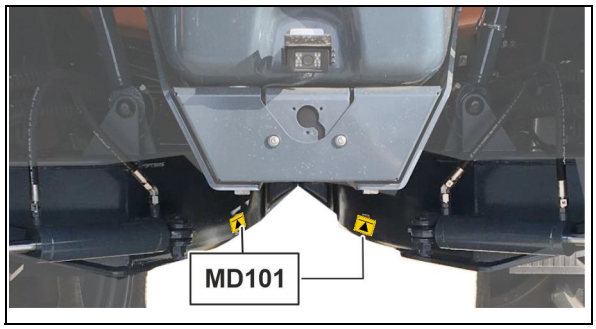
MD101

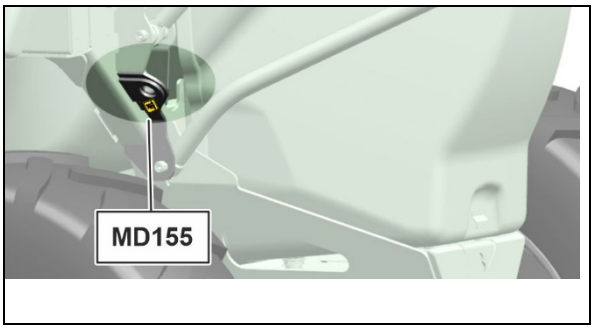
MD155

Order No. and explanation	Warning symbols
MD 078 **Risk of crushing fingers or hands by accessible moving machine parts.** This danger causes serious injuries, including loss of body parts such as fingers or hand. Never reach into the danger area while the tractor engine is running and the PTO shaft / hydraulic system is connected.	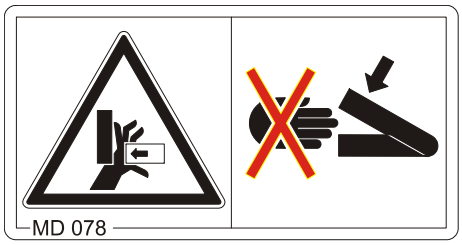
MD 082 **Danger of falling from treads and platforms when riding on the machine.** This danger causes serious or potentially fatal injuries anywhere on the body. It is forbidden to ride on the machine and/or climb the machine while it is running. This also applies to machines with treads or platforms. Make sure that nobody is riding on the machine.	
MD 089 **Risk of crushing the entire body due to standing under suspended loads or raised machine parts.** Causes serious, potentially fatal injuries anywhere on the body. • It is forbidden to stand under suspended loads or raised machine parts. • Maintain an adequate safety distance from any suspended loads or raised machine parts. • Ensure that all personnel maintain an adequate safety distance from suspended loads or raised machine parts.	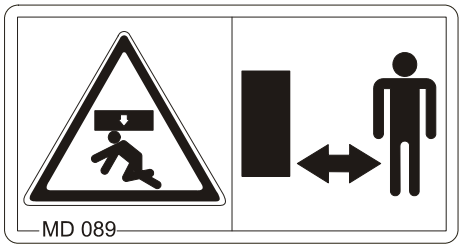

MD 094

Risk of electric shock or burns from accidentally touching overhead power lines or by coming within the prohibited distance of high voltage overhead power lines.

These dangers can cause extremely serious and potentially fatal injuries.

Maintain a sufficient distance from electrical overhead cables when swinging any parts of the machine in and out.

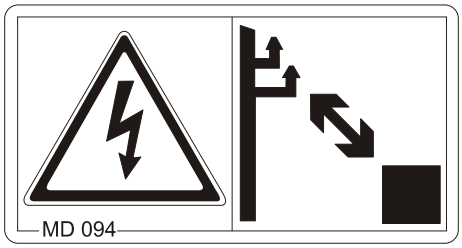

Nominal voltage	Safety distance from transmission lines
up to 1 kV	1 m
over 1 up to 110 kV	2 m
over 110 up to 220 kV	3 m
over 220 up to 380 kV	4 m

MD 099

Risk of contact with hazardous materials due to improper handling.

Causes serious, potentially fatal injuries anywhere on the body.

Put on the personal protective equipment.

Before coming into contact with hazardous materials, put on protective clothing. Follow the manufacturer's safety instructions for the materials to be processed

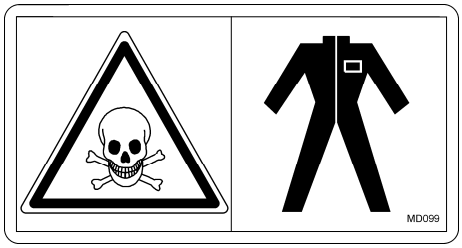

MD 100

This symbol indicates the lifting gear attachment points used for loading of the implement.

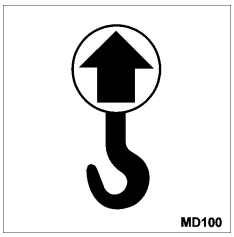

MD101

This symbol indicates jacking points for lifting gear (jack).

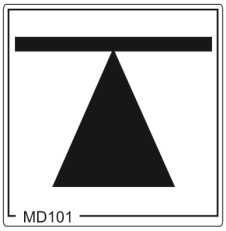

MD 104

Risk of crushing the entire body or impacts due to standing in the swivel range of laterally moving implement parts.

These dangers can cause extremely serious and potentially fatal injuries.

- Maintain an adequate safety distance from moving implement parts while the tractor engine is running.
- Ensure that all personnel maintain an adequate safety distance from moving implement parts.

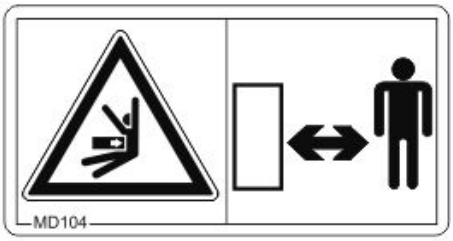

MD 108

Risk of explosion, or danger from hydraulic fluid escaping under high pressure, caused by the pressure accumulator which is under pressure from gas and oil.

These dangers can cause serious and potentially fatal injuries if highly pressurised, escaping hydraulic fluid penetrates the skin and passes into the body.

- Read and observe the instructions in the operating manual before carrying out any maintenance or repair work.
- If you are injured by hydraulic fluid, contact a doctor immediately.

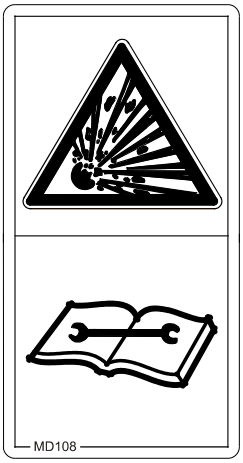

MD 114

This symbol indicates a lubrication point

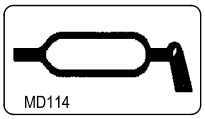

MD 155

This icon designates the restraint points for tieing the machine to a transport vehicle allowing the machine to be transported in a safe manner.

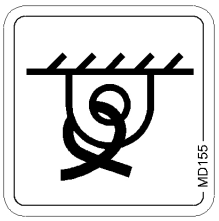

MD 159

Only fill the hand wash tank with clear fresh water, and never with crop protection agents!

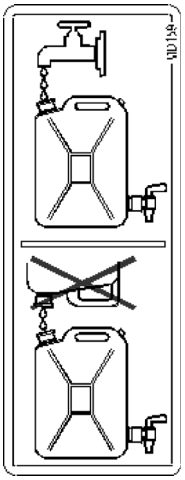

MD 173

Risk of breathing in hazardous materials via poisonous vapours from the spray liquid tank.

This danger can cause extremely serious and potentially fatal injuries.

Never climb into the spray liquid tank.

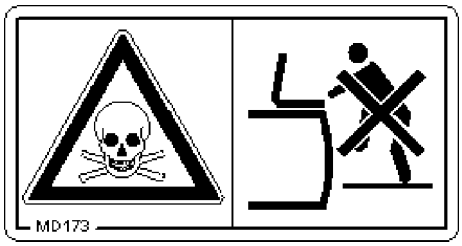

MD 174

Danger from unintended continued movement of the machine.

Causes serious, potentially fatal injuries anywhere on the body.

S ecure the implement against unintentionally rolling away.

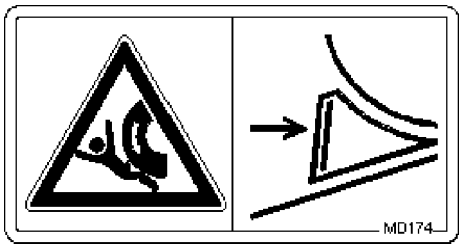

MD 175

The torque for the bolt connection is 450 Nm.

MD 192

Danger of fluids escaping under high pressure while working on hoses and connections under pressure!

This danger can result in severe injuries to the entire body.

It is not allowed to work on this component.

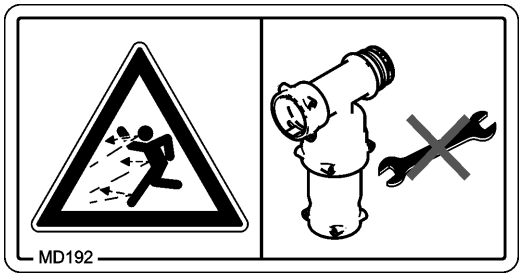

MD208

Hazard caused by falling down from the machine when leaving the cabin resulting from the ladder not being slewed down!

This danger can result in extremely serious injuries.

Slew down the ladder before leaving the cabin.

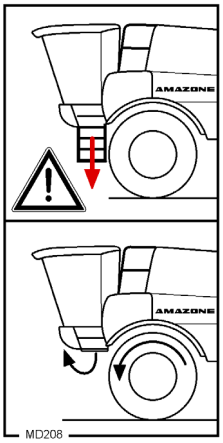

MD 210

Danger from intervention in the machine, e.g. installation, adjusting, troubleshooting, cleaning, maintaining and repairing, due to the tractor and the machine being started unintentionally and rolling.

These dangers can cause extremely serious and potentially fatal injuries.

- Secure the tractor and the machine against unintentional start-up and rolling before any intervention in the machine.
- Depending on the type of intervention, read and understand the information in the relevant sections of the operating manual.

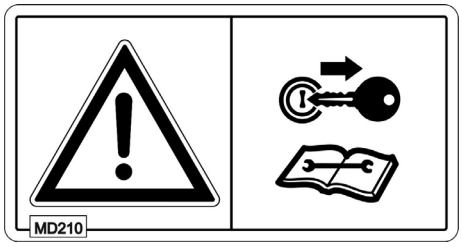

MD 211

Read and follow the operating manual and safety information before starting up the machine!

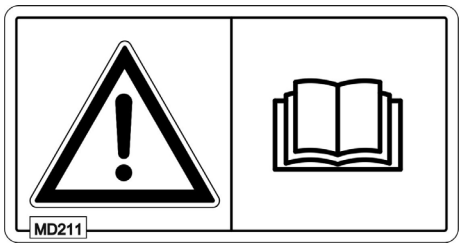

MD 212

Danger from escaping high-pressure hydraulic fluid due to leaking hydraulic hose lines.

This danger may cause serious injuries, perhaps even resulting in death, if escaping high-pressure hydraulic fluid passes through the skin and into the body.

- Never attempt to plug leaks in hydraulic hose lines with your hand or fingers.
- Read and observe the information in the operating manual before carrying out maintenance work on the hydraulic hose lines.
- If you are injured by hydraulic fluid, contact a doctor immediately.

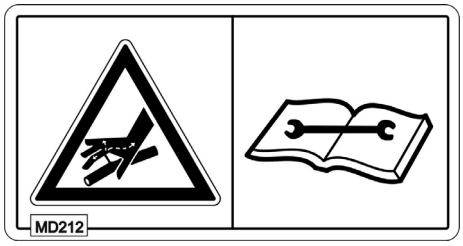

MD 224

Risk of contact with hazardous materials due to improper use of clear fresh water from the hand wash tank.

This danger can cause extremely serious and potentially fatal injuries.

Never use the clear water from the hand wash tank as drinking water.

2.14 Potential risks from not observing the safety instructions

Non-compliance with the safety information

- can pose both a danger to people and also to the environment and machine.
- can lead to the loss of all warranty claims.

In particular, non-compliance with the safety information could pose the following risks:

- Danger to people through non-secured working areas.
- Failure of important machine functions.
- Failure of prescribed methods of maintenance and repair.
- Danger to people through mechanical and chemical influences.
- Risk to the environment through leakage of hydraulic fluid.

2.15 Safety-conscious working

Besides the safety information in this operating manual, the generally applicable national workplace safety and accident prevention regulations are binding.

Comply with the accident prevention instructions on the warning pictograms.

When driving on public roads and routes, comply with the appropriate statutory road traffic regulations.

2.16 Safety information for users

WARNING

Risk of crushing, cutting, being trapped or drawn in, or impact through inadequate roadworthiness and operational safety.

Before starting up the machine and the tractor, always check their roadworthiness and operational safety.

2.16.1 General safety and accident prevention information

- Beside these instructions, comply with the generally applicable national safety and accident prevention regulations.
- The warning symbols and other labels attached to the machine provide important information on safe machine operation. Compliance with this information is in the interests of your safety.
- Before moving off and starting up the machine, check the immediate area of the machine (children). Ensure that you can see clearly.
- Drive in such a way that you always have full control over the tractor with the attached machine.

  In so doing, take your personal abilities into account, as well as the road, traffic, visibility and weather conditions, the driving characteristics of the tractor and the connected machine.

Use of the machine

- Before the engine is started, convince yourself that all drives are switched off.
- Before starting work, ensure that you understand all the equipment and actuation elements of the machine and their function. There is no time for this when the machine is already in operation.
- Do not wear loose-fitting clothing. Loose clothing increases the risk of being caught by the drive shaft.
- Only start-up the machine, when all the safety equipment has been attached and is in the safety position.
- Before starting work on the machine, check for damage or wear as well as leaking coolant or spray fluids. Check nuts and bolts regularly for tightness and re-tighten if necessary
- Comply with the maximum load for the machine. If necessary, drive only with a partially filled tank.
- The driving behaviour of the machine is influenced by the weight in the tank.
- It is forbidden to stand in the working area of the machine.
- It is forbidden to stand in the turning and swivel range of the machine.• There are crushing and cutting points at externally-actuated (e.g. hydraulic) machine points.
- Only actuate externally-actuated machine parts when you are sure that no-one is standing within the prescribed safety distance.

- Take note of the working width when driving the machine, no obstacles should be in the way especially when driving on headlands with the sprayer boom folded out.
- Before leaving the tractor, secure it against unintended starting and rolling.

  To do this:
  - o apply the parking brake
  - o switch off the engine
  - o remove the ignition key
- Operation of the machine is carried out only when sitting down.
- Use only those fuels specified according to DIN / EN 590.

Driving on public roads

- When using public roads, national road traffic regulations must be observed.
- Adjust your driving speed to the prevailing conditions.
- Drive with great care in case of narrow track widths!
- Before starting up the machine each time, always check their traffic and operational safety.

2.16.2 Hydraulic system

- The hydraulic system is under a high pressure.
- Before working on the hydraulic system,
  - depressurise the hydraulic system
  - shut off the tractor engine
  - apply the parking brake
  - remove the ignition key
- Have the hydraulic hose lines checked at least once a year by a specialist for proper functioning.
- Replace the hydraulic hose line if it is damaged or worn. Only use genuine AMAZONE hydraulic hose lines.
- The hydraulic hose lines should not be used for longer than six years. This period includes any storage time of a maximum of two years. Even with proper storage and approved use, hoses and hose connections are subject to natural ageing, thus limiting the length of use. However, it may be possible to specify the length of use from experience values, in particular when taking the risk potential into account. In the case of hoses and hose connections made from thermoplastics, other guide values may be decisive.
- Never attempt to plug leaks in hydraulic hose lines with your hand or fingers.

  Escaping high pressure fluid (hydraulic fluid) may pass through the skin and ingress into the body, causing serious injuries.

  If you are injured by hydraulic fluid, contact a doctor immediately. Risk of infection.
- When searching for leakage points, use suitable aids, to avoid the serious risk of infection.
- The pressure accumulator in the system is always under pressure (gas and oil). Thus, take care that they are not damaged or exposed to temperatures higher than 150° Celsius.
- After connecting the hydraulic hoses, always make a check of the direction of function and therefore, the engine or direction of motion of the cylinder are still correct.

2.16.3 Electrical system

- When working on the electrical system, always disconnect the battery (negative terminal).
- Only use the prescribed fuses. If fuses are used that are too highly rated, the electrical system will be destroyed – risk of fire.
- Risk of explosion. Avoid sparking and naked flames in the area of the battery.
- Ensure that the battery is connected correctly - firstly connect the positive terminal and then connect the negative terminal. When disconnecting the battery, disconnect the negative terminal first, followed by the positive terminal.
- Always place the appropriate cover over the positive battery terminal. If there is accidental earth contact, there is a risk of explosion
- The machine may be equipped with electronic components whose function is influenced by electromagnetic interference from other units. Such interference can pose risks to people, if the following safety information is not followed.
  - If retrofitting electrical units and/or components on the machine with a connection to the on-board power supply, the user is responsible for checking whether the installation might cause faults on the vehicle electronics or other components.
  - Ensure that the retrofitted electrical and electronic components comply with the EMC directive 2014/30/EU in the appropriate version and bear the CE mark.
- The cable clips must be checked for tight fit on a regular basis. Corrosion to cable connections will lead to the loss of tension. Clean and grease with acid-free Vaseline.
- The battery acid is highly corrosive and any contact to skin should therefore be avoided. If however, acid should get into your eyes, immediately rinse under running water for 10 to 15 minutes and seek medical advice immediately.
- Replace damaged cables immediately.
- Old batteries must be disposed of according to regulations.
- Store the batteries in a dry area during the winter periods (corrosion).

2.16.4 Brake system

- Only specialist workshops or recognised brake services can carry out adjustment and repair work on the brake system.
- Have the brake system thoroughly checked regularly.
- If there are any malfunctions, stop the tractor immediately using the brake system. Have the malfunction rectified immediately.
- Before working on the brake system, park the machine safely and secure the machine against unintentionally rolling away (wheel chocks)!
- Be particularly careful when carrying out any welding, torch cutting or drilling work in the area of the brake lines.
- Always carry out a braking test after any adjusting or repair work on the braking system.

Pneumatic braking system

- You are only allowed to start to move the vehicle after the hand brake symbol no longer appears in red in AMADRIVE

2.16.5 Tyres

- Repair work on tyres and wheels may only be carried out by specialists with suitable installation tools.
- Check the air pressure at regular intervals.
- Inflate tyres to the specified air pressure! If the air pressure in the tyres is too high, then there is a risk of explosions.
- Park the machine in a safe place and secure the machine against unintentionally rolling away (parking brake, wheel chocks), before carrying out work on the tyres!
- Tighten or retighten all the fixing screws and nuts in accordance with the specifications of AMAZONEN-WERKE.

2.16.6 Field sprayer operation

Safety instructions regarding filling of the field sprayer

- The nominal volume of the spray liquid tank must never be exceeded when filling!
- Only use original AMAZONE filling equipment to fill the field sprayer!
- Do not fill field sprayers with water from open bodies of water, for the protection of people, animals and the environment!

Safety instructions regarding crop protection products

- Comply with the recommendations provided by the manufacturer of the crop protection product with regard to
  - Personal protective equipment
  - Warnings concerning the handling of crop protection products
  - Regulations on metering, application, and cleaning
- When handling crop protection products, comply with the safety instructions provided by the crop protection product manufacturer.
- Using non-approved crop protection products is prohibited!
- Comply with the information on the compatibility of crop protection products and substances for the field sprayer!
- Do not spray any crop protection products that have a tendency to stick together or set!

Safety instructions regarding cab contamination

- Take off contaminated protective equipment, contaminated clothing, shoes, and gloves before entering the cab.
- Reduce the risk of exposure to hazardous substances with the following measures:
  - Do not bring any used personal protective equipment, old canisters with crop protection products, any contaminated gloves, shoes or clothing items into the cab.
  - Clean the cab interior, if it has been contaminated with aerosols or fumes:
    - Take off the contaminated protective equipment.
    - Before entering the contaminated cab, put on clean protective equipment as specified by the manufacturer of the crop protection product.
    - Clean the cab as specified by the manufacturer of the crop protection product.
  - Follow the instructions of the manufacturer of the personal protective equipment, of the crop protection product, of the system for the outside air supply / filtration as well as the national guidelines for health and occupational safety.
- Doors and windows of Category 4 cabs must be adequately sealed to prevent dusts, aerosols, and fumes from penetrating into the cab. Ensure that the cable glands and glands for other supply lines do not leak. See Maintenance section.

Safety instructions regarding personal protective equipment

- When handling crop protection products, comply with the requirements specified in the safety data sheet for the active substances used, and comply with the regulations concerning the personal protective equipment. Depending on the requirements specified in the safety data sheet of the active substances used, the following components are part of the personal protective equipment:
  - Chemical-resistant coverall DIN 32781
  - Rubber apron in accordance with EN 14605
  - Eye protection in accordance with EN 166
  - Respirator mask in accordance with DIN EN 143/149/405/14387, at least half mask with combined gas & particle filter A1-P2 (identification color brown-white)
  - Protective gauntlet gloves in accordance with DIN 347/388/420
  - Protective footwear

  Use the personal protective equipment, if you could come into contact with crop protection products or fertilizers when performing one of the following tasks:
  - Filling the spray liquid tank and adding chemicals
  - Making adjustments on the machine
  - Emptying or cleaning the tank
  - Using different chemicals
  - Maintenance
- Depending on the requirements specified in the safety data sheet for the active substances used and the cab classification, wear clean personal protective equipment in the cab.

General instructions

- Wear suitable and robust clothing, such as safety footwear, long pants and a long-sleeved shirt.
- Never open lines that are under pressure!
- Reduce the speed when turning.

  The steering wheel must be turned slowly at the start and end of the curve; otherwise, the boom will be subjected to excessive load.
- Switch off the sprayer on headlands.
- Always carry sufficient water with you so that you are able to rinse off the crop protection product in the event of an emergency. If necessary, seek medical attention if there is bodily contact with crop protection product! Risk of infection.

2.16.7 Cleaning, maintenance and repair

- Due to toxic vapours in the spray liquid tank, climbing into the spray liquid tank is always forbidden.
- Repair work in the spray liquid tank must only be carried out by a specialist workshop!
- As a general rule, only carry out maintenance or repair work or cleaning when
  - the drive is switched off
  - the ignition key has been removed
- The machine must be positioned in a stable position during repairs. Always use wheel chocks on slopes.
- Secure the raised machine and/or raised machine parts against unintentional lowering before performing any cleaning, maintenance or repair work on the machine.
- Regularly check the nuts and bolts for firm seating and retighten them as necessary.
- When replacing work tools with blades, use suitable tools and gloves.
- Dispose of oils, greases and filters in the appropriate way.
- When changing the oil or dismantling the hydraulic parts, take measures to prevent the risk of burns that can result from hot oil.
- The cooling system of the engine should be cleaned on a regular basis; oil and plant residues are highly inflammable.
- Always wear protective clothing when welding!
- Attention: If the machine had previously been used to spray liquid fertiliser (ammonium nitrate), there is a risk of explosion when carrying out welding work! Clean the respective work area before starting work.
- Spare parts must meet at least the specified technical requirements of AMAZONEN-WERKE.
  This is ensured through the use of genuine AMAZONE spare parts.
- Anti-freeze: The fluid must be drained from all lines, pumps and containers.
- Repair work in the spray liquid tank may only be carried out after thorough cleaning and using breathing apparatus. For safety reasons a second person must monitor the work from outside the spray liquid tank!
- When repairing field sprayers which have been used for liquid fertiliser application with ammonium nitrate / urea solution, observe the following points:

  Residues of ammonium nitrate / urea solutions may form salts by the evaporation of the water on or in the spray liquid tank. This produces pure ammonium nitrate and urea. In its undiluted form, ammonium nitrate is explosive when combined with organic substances, e.g. urea, and subjected to critical temperatures during repair work (e.g. welding, grinding, filing).

  This danger can be eliminated by thoroughly washing out the spray liquid tank or the parts intended for repair with water, because the salt of the ammonium nitrate / urea solution is water-soluble. For this reason, clean the field sprayer thoroughly with water before carrying out repair work.

3 Loading

DANGER

Risk of accidents due to incorrect lading situation on the transport vehicle.

- Lower the implement for transport via the Configuration menu on the AmaDrive. Raise the implement again after transport.
- To secure the implement on a transport vehicle, the 3 marked lashing points must be used.

- Front lashing point

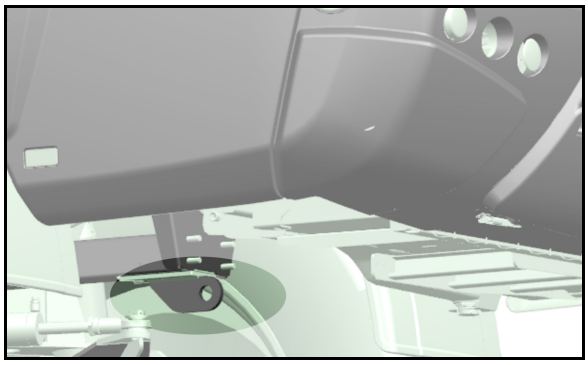

- Rear lashing points

When loading, lower the machine using the hydro-pneumatic spring suspension. Reactivate the hydro-pneumatic spring suspension again before use, see page 69.

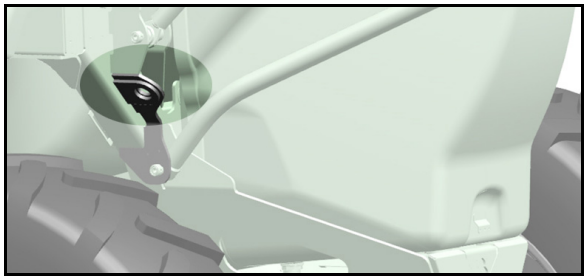

4 Product description

This section:

- provides a comprehensive overview of the machine structure.
- provides the names of the individual modules and controls.

If possible, read this section when actually at the machine. This helps you to understand the machine better.

The machine comprises the main assemblies:

- Tandem chassis with hydro-pneumatic suspension and central track width adjustment.
- Hydraulic front-wheel steering system, all-wheel steering system and crab steering system
- Front-wheel steering system for road transport
- Continuously variable hydrostatic individual wheel drive with disc brakes
- 6 cylinder DEUTZ turbo diesel engine
- Full-comfort CLAAS cab, heater, full-comfort seat with air suspension, adjustable steering column, CD-Radio, air conditioner, clock
- 3 pumps (spraying pump, agitator pump, and optional flushing water pump)
- Control terminal for spraying functions
- Super-L boom with field spray line, oscillation compensation, hydraulic slope compensation and Profi folding I (one-sided folding) or Profi folding II (angle-in / angle-out)
- Spray liquid tank with agitator, filling level indicator, flushing water tank
- Induction device, tank cleaning nozzles
- Electrical remote control of the field sprayer, job memory and GPS applications with control terminal and multi-function stick
- Vehicle operation with AMADRIVE control terminal.

4.1 Overview of the assemblies

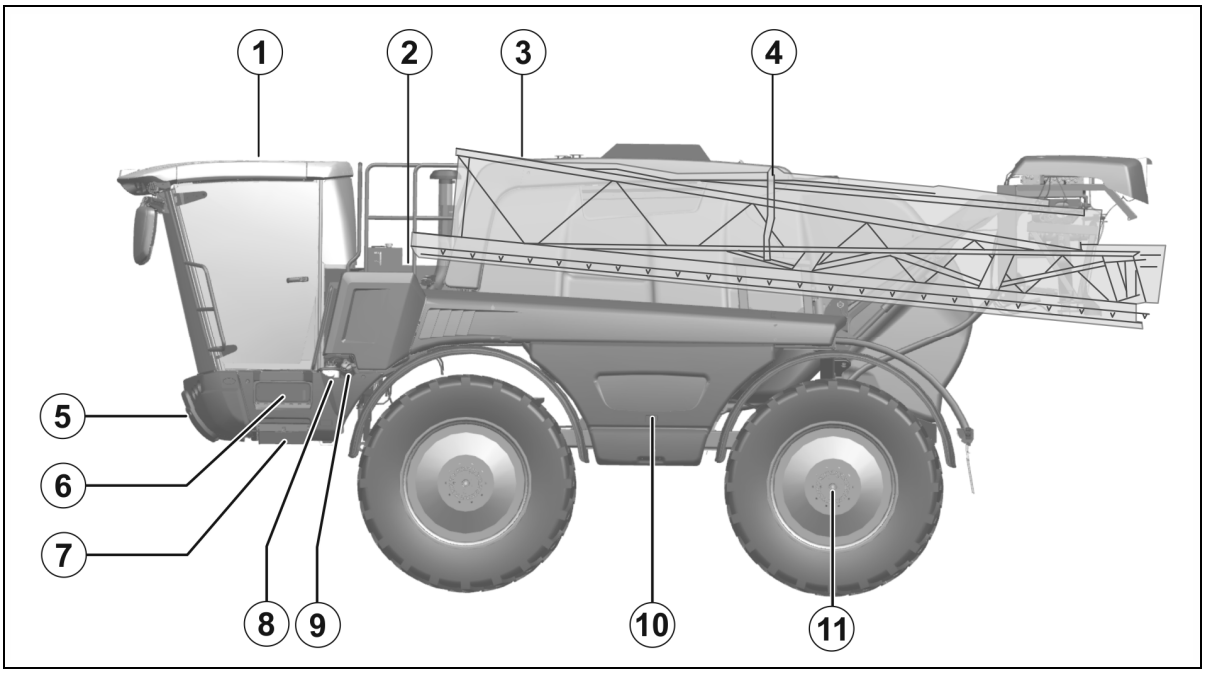

(1) Driver's cabin

(2) Operation platform with maintenance flap

(3) Sprayer boom

(4) Boom locking mechanism

(5) Stowage compartment at the front

(6) Glove compartment

(7) Slewable ladder

(8) DEF filling opening

(9) Diesel filling opening

(10) Folding cover for control panel and induction bowl

(11) Wheels with hydrostatic drive

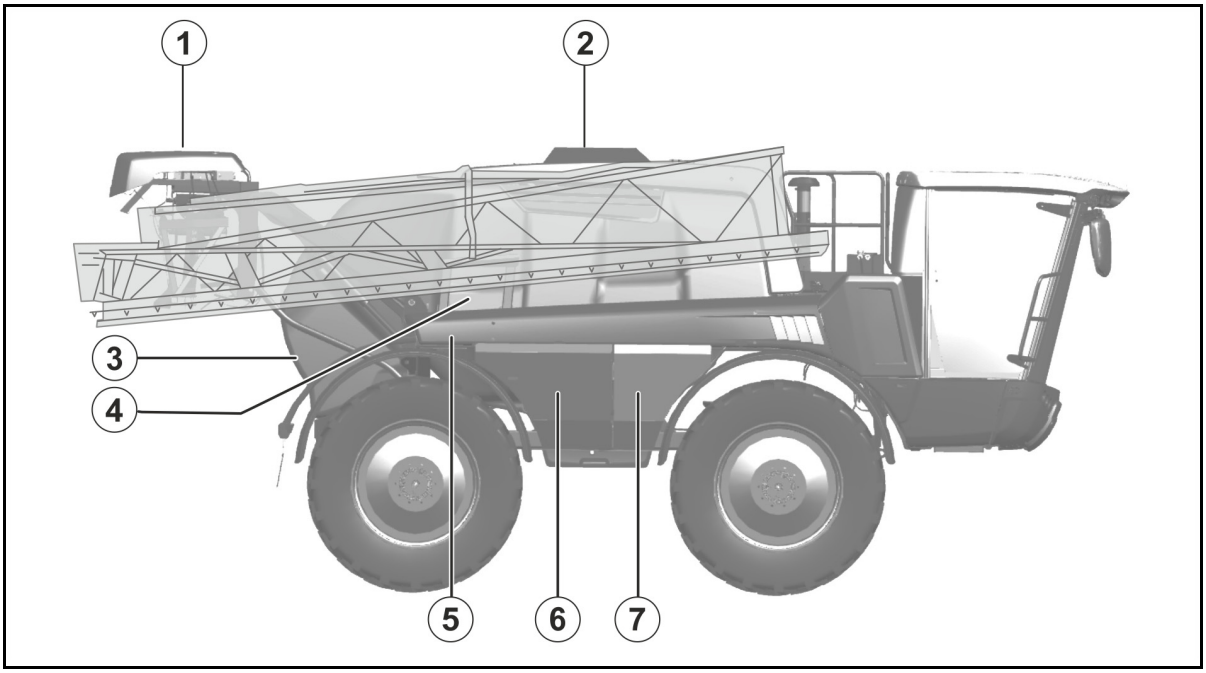

(1) Boom equipment

(2) Exhaust gas system with particle filter

(3) Flushing water tank

(4) Spray liquid tank

(5) Folding cover for flushing water pump and HighFlow

(6) Folding cover for pumps and HighFlow

(7) Hydraulic oil tank

4.2 Operating instructions and third party documentation

This operating manual of the machine and documentation of third parties are located in the service case.

Please observe the enclosed third-party documentation!

4.3 Safety and protection equipment

(1) Transport locking mechanism to prevent the Super-L boom from folding out unintentionally

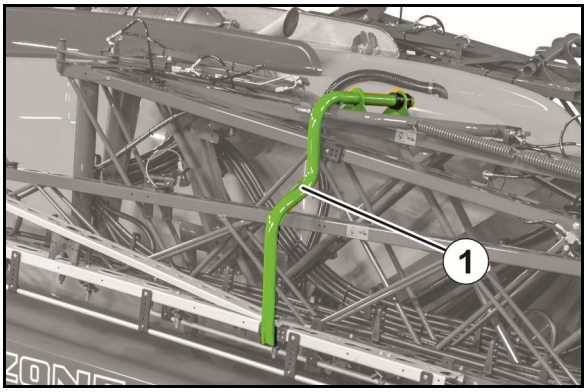

(1) Railing to protect against falling

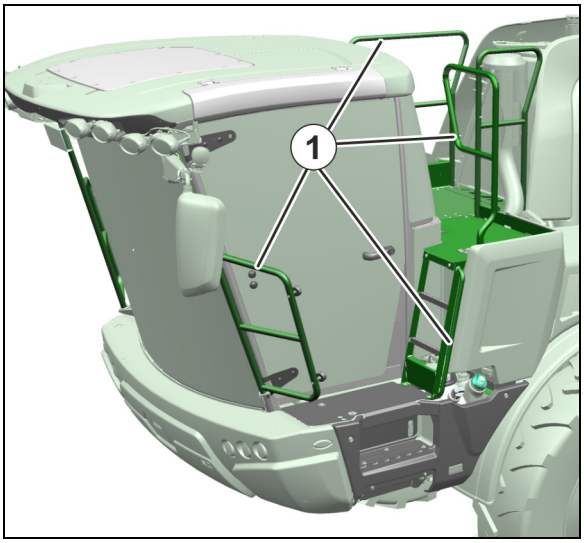

(2) Emergency exit on the right side of the cabin

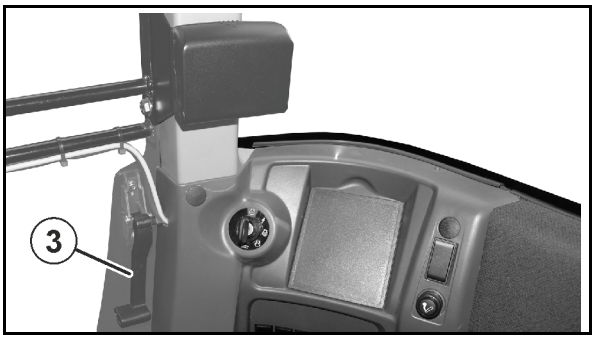

4.4 Transportation equipment

(1) Warning signs (square)
(2) Indicators / parking light
(3) Dipped beam
(4) High beam
(5) Rear-view mirror

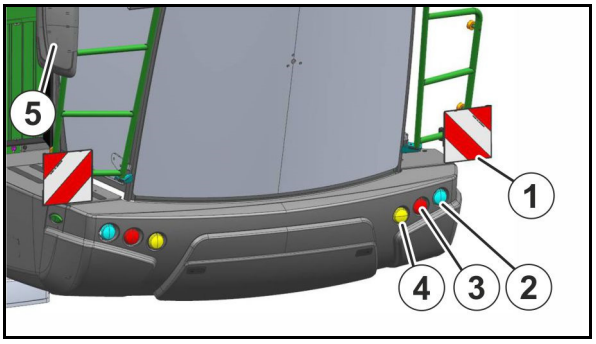

(1) Warning signs (square)
(2) Reflector, white (round)
(3) Rear lights, brake lights
(4) Reflector, red (round)
(5) Reflector, yellow
(6) Marker lights
(7) Turn indicators

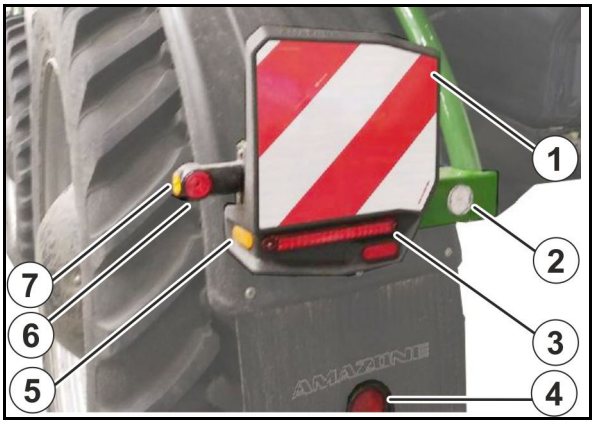

(1) Number plate holder with lighting
(2) Warning beacon

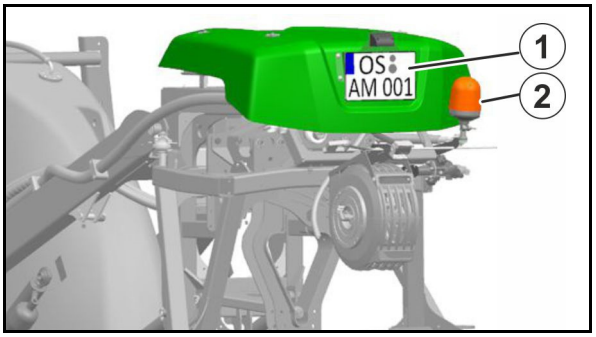

(1) 2 x 3 reflectors, yellow
(lateral view: distance of max. 3m)

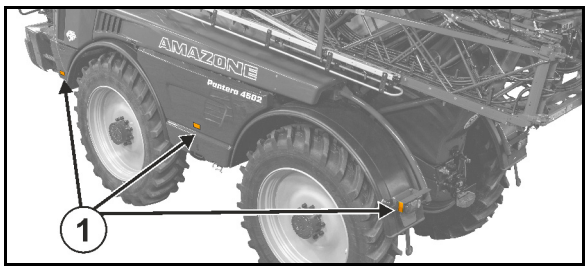

4.5 Intended use

The self-propelled Pantera field sprayer

- is intended for use in field crops and is used for transporting and spreading of crop protectant (insecticides, fungicides, herbicides, amongst others) in the form of suspensions, emulsions and mixtures as well as liquid fertiliser.
- is operated by one person in the cabin.
- a combination with other machines, devices and superstructures is not intended by the manufacturer.

Restrictions for use on slopes

(1) Driving on slopes with a full spray liquid tank

(2) Driving on slopes with max. half-filled spray liquid tank

(3) Application of residual quantities

(4) Turning

(5) Folding the sprayer boom

	(1)	(2)	(3)	(4)	(5)
Along the contours	15%	15%	15%	15%	20%
Up/down the slope	15%	20%	15%	15%	20%

"Intended use" also covers:

- Compliance with all the instructions in this operating manual.
- Execution of inspection and maintenance work.
- Exclusive use of genuine AMAZONE spare parts.

Other uses to those specified above are forbidden and shall be considered as improper.

For any damage resulting from improper use:

- the operator bears the sole responsibility,
- AMAZONEN-WERKE accepts no liability.

4.6 Regular device inspections

The implement underlies the European Union universally applicable regular device inspections (Crop Protection Directive 2009/128/EC and EN ISO 16122).

Have the device inspected at regular intervals by a recognised and certified inspection workshop.

The date for performing the next device inspection is written on the inspection plate on the implement.

German inspection plate

4.7 Consequences of using certain crop protection agents

We would like to draw attention to the fact that extended exposure (20 hours) to crop protection agents with which we are familiar, e.g. Lasso, Betanal and Tramat, Stomp, Iloxan, Mudecan, Elancolan and Teridox, can cause damage to the pump diaphragms, hoses, spray lines and tanks. The examples given are in no way intended to represent a comprehensive list.

In particular, we warn against unauthorised mixtures of two or more different crop protection agents.

Substances which have a tendency to stick together or set must not be applied.

When using such aggressive crop protection agents, it is recommended that the spray liquid be applied immediately after preparation and then that the sprayer be thoroughly cleaned afterwards with water.

Viton membranes are available as replacements for pumps. These are resistant to solvent-containing crop protection agents. However their service life is reduced by use at low temperatures (e.g. AUS in frosty conditions).

The materials and components used for AMAZONE field sprayers are safe for liquid fertiliser.

4.8 Danger areas and danger points

The danger area is the area around the machine in which people can be caught:

- work movements made by the machine and its tools
- materials or foreign bodies thrown out of the machine
- tools rising or falling unintentionally
- unintentional rolling of the tractor and the machine

Within the machine danger area, there are danger points with permanent or unexpected risks. Warning pictograms indicate these danger points and warn against residual dangers, which cannot be eliminated for construction reasons. Here, the special safety regulations of the appropriate section shall be valid.

No-one may stand in the machine danger area:

- if the tractor engine is running with the PTO shaft / hydraulic system connected.
- if the tractor and machine are not protected against unintentional start-up and rolling.

The operating person may only move the machine or switch or drive the tools from the transport position to the working position or vice-versa when there is no-one in the machine danger area.

Danger points exist:

- where there are moving components.
- on the moving machine.
- in the swivel range of the sprayer boom.
- in the spray liquid tank due to poisonous vapours.
- under raised, unsecured machines or machine parts.
- when unfolding/folding the sprayer boom in the vicinity of overhead electricity cables, through contact with the cables.
- near the hot exhaust system on the tractor, in particular with active regeneration of the diesel particle filter

4.9 Rating plate

Machine rating plate

(1) Implement number

(2) Vehicle identification number

(3) Product

(4) Permissible technical implement weight

(5) Model year

(6) Year of manufacture

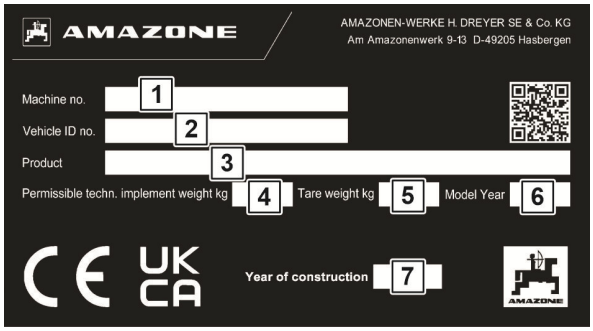

Additional rating plate

(1) Note for type approval

(2) Note for type approval

(3) Vehicle identification number

(4) Permissible technical total weight

(5) Permissible technical trailer load for a drawbar trailer vehicle with pneumatic brake

(A0) Permissible technical drawbar load A-0

(A1) Permissible technical axle load for axle 1

(A2) Permissible technical axle load for axle 2

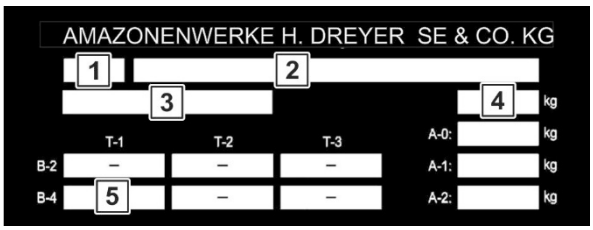

4.10 Conformity

	Directives/Standards designation	
The implement complies with the	• Implement directive	2006/42/EC
	• EMC directive	2014/30/EU

4.11 Technically possible maximum application rate

The application rate of the implement is limited by the following factors:

- Maximum flow to the sprayer boom of 200 l/min (HighFlow 400 l/min).
- Maximum flow per part-width section of 25 l/min (with 2 spray lines: 40 l/min per part-width section).
- Maximum flow per nozzle body of 4 l/min.

4.12 Maximum permissible application rate for crop protection products

The permissible application rate of the implement is limited by the minimum required agitator capacity.

The agitator capacity per minute should be 5% of the hopper volume.

This is particularly applicable for active substances that are hard to keep in suspension.

With active substances that are dissolved, the agitator capacity can be reduced.

Determining the permissible application rate depending on the agitator capacity

Calculation formula for the application rate in l/min:

(The agitator capacity per minute must be 5% of the hopper volume)

Permissible application rate	=	Pump capacity	-	0.05 x nominal tank volume
Permissible application rate	=	490 l/min	-	0,05 x 4500 l
Permissible application rate	=	**265 l/min**		

Conversion of the application rate in l/ha:

1. Determine the application rate per nozzle (divide the permissible application rate by the number of nozzles).
2. Read the application rate per hectare depending on the speed from the spray table (See page 276).

Example: Super L 36 m, 72 nozzles, 10 km/h

Permissible application rate	=	Application rate per nozzle	:	Number of nozzles
Permissible application rate	=	265 l/min	:	72
Permissible application rate	**=**	**3,7 l/min**		

50 cm

H_2O l/ha

6	6,5	7	7,5	8	8,5	9	10	11	12	14	16	l/min	bar 015	02	025	03	04	05	06	08
680	628	583	544	510	480	453	4[illegible]	371	340	291	255	3,4								3,6
700	646	600	560	525	494	467	4[illegible]	382	350	300	263	3,5								3,8
720	665	617	576	540	508	480	4[illegible]	393	360	309	270	3.6								4,0
740	683	634	592	555	522	493	444	4[illegible]	[illegible]	[illegible]	[illegible]	3,7								4,3

km/h

→ **Permissible application rate per hectare = 444 l/ha**

4.13 Technical data

4.13.1 Dimensions

Total length	8600 mm	
Overall height	3800 - 3900 mm	
Overall width of the basic machine	2550 mm	(Standard)
	3000 mm	(depending on the running gear and tyres)
Ground clearance	1050 – 1700 mm	(depending on the running gear and tyres)
Working width	24 - 40 m	

4.13.2 Payload

Maximum payload	**=**	**Permissible technical implement weight**	**-**	**Tare weight**

DANGER

Exceeding the maximum permissible payload is prohibited.

Risk of accident due to unstable driving conditions!

Carefully determine the payload, and therefore the permitted filling amount for your machine. Not all filling media can be used to fill the tank completely.

The permissible technical implement weight and the tare weight are specified on the implement rating plate.

Permissible loads, track widths and tyre data (Pantera Standard)

Wheel size	300/95 R52	320/90 R54	340/85 R48	380/90 R46	380/90 R46	380/90 R50	380/90 R50	480/80 R42	480/80 R46	480/80 R46	520/85 R38	520/85 R42	520/85 R42	620/70 R38	650/65 R38	710/60 R38
Order no.	LE439 +50	LE470 +75	LE459 +50	LE391 +50	LE471 +50	LE410 +50	LE494 +50	LE412 +50	LE267 +50	LE495 +50	LE413 +25	LE437 +25	LE189 +25	LE393 -25	LE368 -25	LE394 -50
Manufacturer	Alliance	BKT AGRI-MAX	Alliance	Michelin	Alliance AGRIFL EX	Alliance	Michelin	Michelin	Michelin	Michelin	Alliance	Alliance	Michelin	Michelin	Trelle-borg	Michelin
Type	350	RT 945	350	SPRAY-BIB	363	AS 350	SPRAY-BIB	AgriBib	AgriBib	SPRAY-BIB	385	FarmPro	Me-gaXBib	Me-gaXBib	Tm800	XeoBib
Offset [mm]	+50	+75	+50	+50	+50	+50	+50	+50	+50	+50	+25	+25	+25	-25	-25	-50
Cross-sectional width [mm]	310	319	345	383	389	380	385	494	499	480	540	516	537	608	645	712
External diameter [mm]	1890	1948	1805	1842	1842	1954	1947	1858	1948	1950	1838	1951	1937	1864	1811	1814
Load index (40 km/h)	159 A8	155A8	159 A8	173 D	161 D	158 A8	175 D	156 A8	158 A8	177 D	155 A8	157 A8	162 A8	170 A8	157D	160 D
Load-bearing capacity at 40 km/h [kg]	4380	3875	4380	6500	5600	4625	6900	4000	4250	7300	3875	4125	4750	6000	4125	4500
Load index (50 km/h)	157 B	155B	156 D	173 D	168 D	158 B	175 D	156 B	158 B	177 D	155 B	157 B	162 B	170 B	157 D	160 D
Load-bearing capacity at 50 km/h [kg]	4200	3875	4200	6500	5600	4250	6900	4000	4250	7300	3875	4125	4750	6000	4125	4500
Max. air pressure [bar]	4,8	3,6	4,8	4,4	4,4	4,3	4,4	2,4	2,4	3,6	1,6	1,6	2,4	3,2	1,6	1
Min. air pressure [bar] at 50	4,8	3,6	4,4	2,2	2,5	3	2,2	2,4	2,2	1,8	1,6	1,6	1,6	1,6	1,4	1
Act. load-bearing capacity at recom. air pressure [kg]	4200	3875	3990	4375	4040	4000	4625	4000	4075	5300	3875	4125	4125	4075	3980	4500
Perm. tot. wheel load capacity	17520	15500	17520	26000	22400	18500	27600	16000	17000	29200	15500	16500	19000	24000	16500	18000
Perm. tot. wheel load capacity	16800	15500	16800	26000	22400	17000	27600	16000	17000	29200	15500	16500	19000	24000	16500	18000
Track width [mm] (from – to)	1800 - 2400	1750 - 2350	1800 - 2400	1800 - 2400	1800 - 2400	1800 - 2400	1800 - 2400	1800 - 2350	1800 - 2400	1800 - 2400	1800 - 2400	1800 - 2400	1800 - 2400	1900 - 2500	1900 - 2500	2000 - 2600
Ground clearance [mm]	1190	1225	1150	1150	1150	1190	1210	1140	1190	1200	1130	1180	1180	1150	1100	1090

Permissible loads, track widths and tyre data (Pantera H)

Wheel size	300/95 R52	320/90 R54	380/90 R46	380/90 R46	380/90 R50	380/90 R50	480/80 R46	480/80 R46	520/85 R42	520/85 R42
Order no.	LE439 +50	LE470 +75	LE391 +50	LE471 +50	LE410 +50	LE494 +50	LE267 +-0	LE495 +-0	LE437 -25	LE189 -25
Manufacturer	Alliance	BKT	Michelin	Alliance	Alliance	Michelin	Michelin	Michelin	Alliance	Michelin
Type	350	AGRI-MAX RT 945	SPRAY BIB	AGRI-FLEX 363	AS 350	SPRAY BIB	AgriBib	SPRAY BIB	Farm Pro	MegaX Bib
Offset [mm]	+50	+75	+50	+50	+50	+50	+0	+0	-25	-25
Cross-sectional width [mm]	310	319	383	389	380	385	499	480	516	537
External diameter [mm]	1890	1948	1842	1842	1954	1947	1948	1950	1951	1937
Load index (40 km/h)	159 A8	155 A8	173 D	168 D	161 A8	175 D	158 A8	177 D	157 A8	162 A8
Load-bearing capacity at 40 km/h [kg]	4380	3875	6500	5600	4250	6900	4250	7300	4125	4750
Load index (50 km/h)	157 B	155 B	173 D	168 D	158 B	175 D	158 B	177 D	157 B	162 B
Load-bearing capacity at 50 km/h [kg]	4200	3875	4375	4200	4240	4625	4250	5300	4125	4750
Max. air pressure [bar]	4,8	3,6	4,4	4,4	4,3	4,4	2,4	3,6	1,6	2,4
Min. air pressure [bar] at 50 km/h	4,8	3,6	2,2	2,7	3,3	2,2	2,4	1,8	1,6	1,6
Act. load-bearing capacity at recom. air pressure [kg]	4200	3875	4375	4200	4240	4625	4250	5300	4125	4125
Perm. tot. wheel load capacity (40 km/h) [kg]	17520	15500	26000	22400	18500	27600	17000	29200	16500	19000
Perm. tot. wheel load capacity (50 km/h) [kg]	16800	15500	26000	22400	17000	27600	17000	29200	16500	19000
Track width [mm] (Running gear down)	1800-2400	1750-2350	1800-2400	1800-2400	1800-2400	1800-2400	1900-2400	1900-2400	1950-2500	1950-2500
Track width [mm] (Running gear up)	2100 - 2600	2100 - 2550	2100 - 2600	2100 - 2600	2100 - 2600	2100 - 2600	2100 - 2600	2100 - 2600	2200 - 2700	2200-2700
Ground clearance [mm] (running gear down)	1180	1250	1180	1180	1250	1250	1230	1230	1220	1220
Ground clearance [mm] (running gear up)	1630	1700	1630	1630	1700	1700	1680	1680	1670	1670

Permissible loads, track widths and tyre data (Pantera W)

Wheel size	300/95 R52	340/85 R48	380/90 R46	380/90 R46	380/90 R50	380/90 R50	480/80 R42	480/80 R46	480/80 R46	520/85 R38	520/85 R42	520/85 R42
Order no.	LE439 +50	LE459 +50	LE391 +50	LE471 +50	LE410 +50	LE494 +50	LE412 +50	LE267 +50	LE495 +50	LE413 +50	LE437 +50	LE189 +50
Manufacturer	Alliance	Alliance	Michelin	Alliance	Alliance	Michelin	Michelin	Michelin	Michelin	Alliance	Alliance	Michelin
Type	350	350	SPRAYBIB	AGRIFLEX 363	AS 350	SPRAYBIB	AgriBib	AgriBib	SPRAYBIB	385	Farm Pro	MegaXBib
Offset [mm]	+50	+50	+50	+50	+50	+50	+50	+50	+50	+50	+50	+50
Cross-sectional width [mm]	310	345	383	389	380	385	494	499	480	540	516	537
External diameter [mm]	1890	1805	1842	1842	1954	1947	1858	1948	1950	1838	1951	1937
Load index (40 km/h)	159 A8	159 A8	173 D	168 D	158 A8	175 D	156 A8	158 A8	177 D	155 A8	157 A8	162 A8
Load-bearing capacity at 40 km/h [kg]	4380	4380	6500	5600	4650	6900	4000	4250	7300	3875	4125	4750
Load index (50 km/h)	157 B	156 D	173 D	168 D	158 B	175 D	156 B	158 B	177 D	155 B	157 B	162 B
Load-bearing capacity at 50 km/h [kg]	4200	4200	6500	5600	4250	6900	4000	4250	7300	3875	4125	4750
Max. air pressure [bar]	4,8	4,8	4,4	4,4	4,3	4,4	2,4	2,4	3,6	1,6	1,6	2,4
Min. air pressure [bar] at 50 km/h	4,8	4,4	2,2	2,5	3	2,2	2,4	2,2	1,8	1,6	1,6	1,6
Act. load-bearing capacity at recom. air pressure [kg]	4200	3990	4375	4040	4000	4625	4000	4075	5300	3875	4125	4125
Perm. tot. wheel load capacity (40 km/h) [kg]	17520	17520	26000	22400	18500	27600	16000	17000	29200	15500	16500	19000
Perm. tot. wheel load capacity (50 km/h) [kg]	16800	16800	26000	22400	17000	27600	16000	17000	29200	15500	16500	19000
Track width [mm] (from – to)	2250 - 3000	2250 - 3000	2250 - 3000	2250 - 3000	2250 - 3000	2250 - 3000	2250 - 3000	2250 - 3000	2250 - 3000	2250 - 3000	2250 - 3000	2250 - 3000
Track width [mm] (from – to)	1110	1070	1060	1070	1105	1130	1060	1120	1120	1050	1100	1100

4.13.3 Technical data spraying system

Typ	Pantera 4503
Spray liquid tank • Actual volume • Nominal volume	 4750 l 4500 l
Flushing water tank volume	500 l
Filling height • from the ground • of working platform	 ca. 3300 m (depending on the tyres) 900 m
Hand wash tank volume	18 l
Permissible system pressure	<10 bar
Central switching mechanism	Electric, part width section valve coupling
Spray pressure adjustment	Electric
Spray pressure setting range	0,8 – 10 bar
Spray pressure display	digital spray pressure display
Suction filter	50 (80) mesh
Main agitator	Fill level dependent control
Additional agitator	Infinitely adjustable
Spray rate control	Ground speed related, via job computer
Nozzle height	500 – 2500 mm

Pump equipment		**Spraying pump / agitator pump** 2 x AR 280
Delivery capacity at nominal speed	at 0 bar	2 x 260 l/min
	at 10 bar	2 x 245 l/min
Power requirement		12,6 kW
Construction type		12- cylinder piston diaphragm pump
Pulsation damping		Pressure reservoir

Part-width sections depending on the working width

Working width	Number	Number of nozzles per part width sections	
		With DUS	**Without** DUS
21 m	5	8-9-8-9-8	8-9-8-9-8
	7	6-6-7-4-7-6-6	6-6-7-4-7-6-6
	9	6-4-5-4-4-4-5-4-6	6-5-5-5-5-5-5-5-6
	11	-	3-3-4-5-4-4-4-5-4-3-3
24 m	5	9-10-10-10-9	9-10-10-10-9-
	7	6-6-8-8-8-6-6	6-6-8-8-8-6-6
	9	6-5-5-5-6-5-5-5-6	6-5-5-5-6-5-5-5-6
	11	-	5-4-5-4-4-4-4-4-5-4-5
	13	-	3-4-4-3-4-4-4-4-4-3-4-4-3
27 m	7	8-7-8-8-8-7-8	8-7-8-8-8-7-8
	9	6-6-6-6-6-6-6-6-6	6-6-6-6-6-6-6-6-6
	11	-	6-6-5-4-4-4-4-4-5-6-6
	13	-	3-3-3-3-6-6-6-6-6-3-3-3-3
28 m	7	9-7-8-8-8-7-9	9-7-8-8-8-7-9
	9	7-6-6-6-6-6-6-6-7	7-6-6-6-6-6-6-6-7
	11	-	4-4-5-5-7-6-7-5-5-4-4
	13	-	4-4-5-4-4-5-4-5-4-4-5-4-4
30 m	9	8-7-6-6-6-6-6-7-8	8-7-6-6-6-6-6-7-8
	11	-	5-5-5-6-6-6-6-6-5-5-5
	13	-	3-3-4-5-5-7-6-7-5-5-4-3-3
32 m	9	8-6-7-7-8-7-7-6-8	8-6-7-7-8-7-7-6-8
	11	-	5-6-6-6-6-6-6-6-6-6-5
	13	-	5-5-5-5-5-5-4-5-5-5-5-5-5
33 m	9	7-8-7-7-8-7-7-8-7	7-8-7-7-8-7-7-8-7
	11	6-6-6-6-6-6-6-6-6-6-6	6-6-6-6-6-6-6-6-6-6-6
	13	-	6-6-4-5-4-5-6-5-4-5-4-6-6
36 m	7	10-10-10-12-10-10-10	10-10-10-12-10-10-10
	9	9-9-7-7-8-7-7-9-9	9-9-7-7-8-7-7-9-9
	11	-	8-7-6-6-6-6-6-6-6-7-8
	13	-	6-6-6-5-5-5-5-5-5-6-6-6-6
36 m / 24 m	9	6-7-(9+1)-9-10-9-(9+1)-7-6	6-7-(9+1)-9-10-9-(9+1)-7-6
	11	-	6-7-(5+1)-6-8-8-8-6-(5+1)-7-6
	13	-	6-7-(5+1)-5-5-5-6-5-5-5-(5+1)-7-6
39 m	9	7-9-9-9-10-9-9-9-7	7-9-9-9-10-9-9-9-7
	11	-	7-6-7-7-8-8-8-7-7-6-7
	13	6-6-6-6-6-6-6-6-6-6-6-6-6	6-6-6-6-6-6-6-6-6-6-6-6-6
40 m	9	8-9-9-9-10-9-9-9-8	8-9-9-9-10-9-9-9-8
	11	-	8-6-7-7-8-8-8-7-7-6-8
	13	-	7-6-6-6-6-6-6-6-6-6-6-6-7

Super L3 - boom

Working width	Number	Number of nozzles per part width sections	
		With DUS	**With** DUS
36 m	7	12-12-8-8-8-12-12	12-12-8-8-8-12-12
	9	6-6-12-8-8-8-12-6-6	6-6-12-8-8-8-12-6-6
	11	-	6-6-6-6-8-8-8-6-6-6-6
	13	-	4-4-4-6-6-8-8-8-6-6-4-4-4

4.13.4 Residual amounts

Technical residue incl. pump

On the flat		24 l
Along the contours		
	Direction of travel 15 % to left	27 l
	Direction of travel 15 % to right	21 l
Along the gradient		
	15% up the slope	32 l
	15% down the slope	32 l

Technical boom residues

Working width	Number of part-width sections	Part-width section control						single nozzle control		
		Without DUS			**With** DUS			**Without** DUS		
		A	**B**	**C**	**A**	**B**	**C**	**A**	**B**	**C**
21 m	5	4,5 l	9,0 l	13,5 l	14,5 l	1,0 l	15,5 l	18,1 l	1,5 l	19,6 l
	7	5,0 l	10,5 l	15,5 l	17,0 l	1,0 l	18,0 l			
	9	5,5 l	16,0 l	21,5 l	23,0 l	1,5 l	24,5 l			
	11	5,5 l	22,0 l	27,5 l	28,5 l	1,5 l	30 l			
24 m	5	5,0 l	10,0 l	15,0 l	16,0 l	1,5 l	17,5 l	19,0 l	2,0 l	21,0 l
	7	5,0 l	11,5 l	16,5 l	17,5 l	1,5 l	19,0 l			
	9	5,5 l	17,0 l	22,5 l	23,5 l	2,0 l	25,5 l			
	11	5,5 l	22,5 l	28,0 l	29,0 l	2,0 l	31,0 l			
	13	6,0 l	25,0 l	31,0 l	33,0 l	2,0 l	35,0 l			
27 m	7	5,0 l	12,5 l	17,5 l	18,5 l	2,0 l	20,5 l	22,4 l	2,0 l	24,4 l
	9	5,5 l	17,5 l	23,0 l	24,0 l	2,0 l	26,0 l			
	11	5,5 l	23,0 l	28,5 l	29,0 l	2,0 l	31,0 l			
	13	6,0 l	25,5 l	31,5 l	33,5 l	2,0 l	35,5 l			
28 m	7	5,0 l	13,0 l	18,0 l	19,0 l	2,0 l	21,0 l	22,8 l	2,0 l	24,8 l
	9	5,5 l	17,5 l	23,0 l	24,0 l	2,0 l	26,0 l			
	11	5,5 l	23,0 l	28,5 l	29,0 l	2,0 l	31,0 l			
	13	6,0 l	25,5 l	31,5 l	33,5 l	2,5 l	36 l			

30 m	9	5,5 l	18,0 l	23,5 l	24,0 l	2,5 l	26,5 l	24,6 l	2,5 l	27,1 l
	11	5,5 l	23,0 l	28,5 l	29,0 l	2,5 l	31,5 l			
	13	6,0 l	26,0 l	32,0 l	34,0 l	2,5 l	36,5 l			
32 m	9	5,5 l	18,5 l	24,0 l	24,0 l	2,5 l	27,0 l	27,9 l	2,5 l	30,4 l
	11	6,0 l	22,5 l	28,5 l	28,5 l	2,5 l	31,0 l			
	13	6,0 l	26,5 l	32,5 l	34 l	2,5 l	36,5 l			
33 m	9	5,5 l	19,0 l	24,5 l	25,0 l	2,5 l	27,5 l	27,6 l	2,5 l	30,1 l
	11	6,0 l	23,0 l	29,0 l	29,5 l	2,5 l	32,0 l			
	13	6,0 l	27,0 l	33,0 l	34,0 l	3,0 l	37,0 l			
36 m	7	5,0 l	16,0 l	21,0 l	21,5 l	3,0 l	24,5 l	29,3 l	3,0 l	32,3 l
	9	5,5 l	19,5 l	25,0 l	25,5 l	3,0 l	28,5 l			
	11	6,0 l	23,0 l	29,0 l	29,5 l	3,0 l	32,5 l			
	13	6,5 l	27,0 l	33,5 l	34,0 l	3,0 l	37,0 l			
39 m	9	5,5 l	20,5 l	26,0 l	26,5 l	3,0 l	29,5 l	33,7 l	3,0 l	36,7 l
	11	6,0 l	24,0 l	30,0 l	30,5 l	3,0 l	33,5 l			
	13	6,5 l	28,0 l	34,5 l	35,0 l	3,0 l	38,0 l			
40 m	9	5,5 l	21,0 l	26,5 l	27,0 l	3,0 l	30,0 l	34,0 l	3,0 l	37,0 l
	11	6,0 l	24,0 l	30,0 l	30,5 l	3,0 l	33,5 l			
	13	6,5 l	28,0 l	34,5 l	35,0 l	3,0 l	38,0 l			
45 m	-	-	-	-	-	-	-	39,6 l	3,0 l	42,6 l

DUS: Pressure circulating system
A: Dilutable
B: Not dilutable
C: Total

4.13.5 Technical data, carrier vehicle

Frame:			
System		Oscillating axle with springs and shock absorb-ers	
Wheelbase		3100 mm	
Turning radius		4500 mm	
Steering	Front axle	Hydraulic via Orbitrol	
	Rear axle	Electric hydraulic	
Drive:		Hydraulic all-wheel drive	
Drive pump	Manufacturer, type Maximum operating pressure	LINDE, HPV 210 (210 ccm/revs), 420 bar	
Wheel motor	Manufacturer, type Maximum operating pressure	LINDE, HMV 75 (75 ccm/revs), 420 bar	
Wheel gears	Manufacturer, type	Bonfrigioli 6 06 W 2	
Auxiliary pump 1	Manufacturer, type Operating pressure (Spraying pump drive, cooler fan)	LINDE, HPR 755 (55 ccm/revs), 200 bar	
Auxiliary pump 2	Manufacturer, type Operating pressure (Cylinder / steering system)	LINDE, MPR50 (50 ccm/rev.), 250 bar	
Auxiliary pump 3 and 4	Manufacturer, type Operating pressure (Cylinder / steering system)	BUCHER, HP 212HD 180 bar (fan drive)	
Travel speed	o Field work	0 - 20 km/ h (30 km/h as an option)	
	o Transport	25 / 40 / 50 km/h	
Diesel engine:			
Manufacturer		DEUTZ	
Engine type		TCD 6.1 L6 industrial motor Turbo diesel engine with direct injection and turbocharger with charge air cooling	
Emission standard	EU USA	Euro 4 EPA Tier 5	Euro 3A
Exhaust after-treatment	• Oxidation catalytic converter • Particle filter • SCR (DEF)	x x x	
Exhaust after-treatment		Oxidation catalytic converter / particle filter	
Maximum power		160 KW (218 PS)	
Electrical system		12 Volt	
Battery		12 Volt 180 Ah	
Fuel tank	Content	290 l	
DEF-Tank (Euro 5)	Content	20l	

4.13.6 Emission values according to noise and vibration health & safety regulations

The measurements were performed in compliance with the noise and vibration health & safety regulations 2002/44/EC.

Noise level:

The workplace-related emission value (noise level) is 75 dB(A), measured in operating condition at the ear of the tractor driver with the tractor cab closed.

Measuring device: OPTAC SLM 5.

Vibrations:

The job-related emission value (daily vibration exposure) is 0.44 m/s^2, measured during operation at the driver's seat

Measuring device: Pietzotronics 356B41

5 Structure and function, carrier vehicle

5.1 Drive

See separate operating manual for Deutz engine.

A Deutz diesel engine serves as the drive.

The diesel engine can be operated in two states:

Eco mode:

- Requirement-orientated adoption of the engine speed with regard to an optimum fuel consumption and maximum output.
- Reduced speed level.
- Moderate driving dynamics.
- Idling speed 800 min^{-1}.

Standard mode:

- Full driving dynamics.
- Maximum engine speed of 2000 min^{-1} possible.
- Manual adjustment of the engine speed in field mode.

5.1.1 Driving-in the engine

We recommend that you treat the engine with great care during the first 50 operational hours. This means that the engine has to warm-up first during this period before it is sped up to high load and not at full speed straight away.

Following work at maximum load, allow the engine to idle for a while until the temperature of the motor sinks to a normal value to prevent heat accumulation if the engine is stopped immediately.

The oil has to be changed after the first 50 to 150 operational hours (while the engine is still warm!), the oil filter and fuel filters also have to be replaced.

In the event of queries on maintenance, observe the details of the engine manufacturer.

5.1.2 Engine fuel system

The diesel tank and the DEF tank are located on the left side of the machine.

(1) DEF tank for Euro 5

(2) Diesel tank

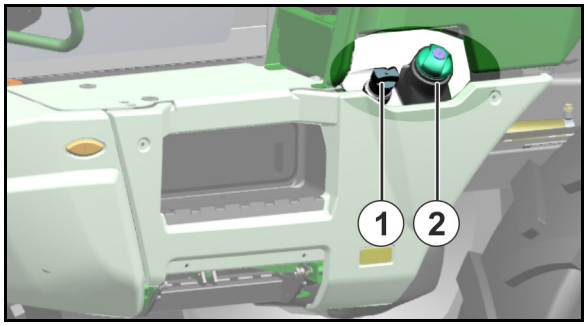

CAUTION

- **Turn off the engine when filling the fuel tank.**
- **Never smoke when filling the fuel tank!**
- **Take care that no oil / petrol penetrates into the ground → Environmental pollution!**

- Also make sure that no dirt is able to enter the fuel tank.
- Before you open the tank, you have to clean the cover and the opening thoroughly first.

→ Small contaminants may seriously damage the fuel system.

- Preferably, the tank should be filled in the evening immediately after working in order to avoid the accumulation of condensed water in the tank.

→ Water can cause damage to the fuel system and leads to the formation of rust.

Avoid driving until the fuel tank is empty.

→ Air and impurities in the residual petrol may enter the system and reduce the service life or block the fuel pump.

Fuel quality

The following fuel specifications are approved:

- Diesel fuels

  Sulphur ≤ 10 mg/kg

  - DIN 51628
  - EN 590

  Sulphur ≤15 mg/kg

  - ASTM D 975 Grade 1-D S15 –
  - ASTM D 975 Grade 2-D S15
- Light fuel oil (EN 590 quality)

  Sulphur ≤10 mg/kg

Take care that you fill the tank with the fuel for the respective season!

Additives are contained in winter fuel that prevent the formation of paraffin and ice crystals at low temperatures. Otherwise this may lead to blockages in the fuel system.

When using the machine in transitional periods, you should therefore fill the tank with fuels complying with DIN/EN 590.

5.2 Exhaust gas treatment

Only for Euro 5 Emission Standard

The exhaust treatment consists of :

- Oxidation catalyser
- Particle filter with regeneration system
- Selective catalytic reduction (SCR) with DEF

5.2.1 Diesel particle filter

WARNING

Risk of burns from a hot particle filter.

During regeneration, the diesel particle filter on the machine can get up to 500° hot. While the machine is running, always keep people away from it.

The particle filter is continuously regenerated while the motor is running.

The particle filter must be replaced after 8000 operational hours when the message appears on the AMADRIVE.

An ash load of 100 % is then reached (see AMADRIVE operating data). Regeneration is no longer possible.

5.2.2 Reduction of the nitrogen oxides in the exhaust gas (SCR)

The reduction of the nitrogen oxides in the exhaust gas is called SCR (selective catalytic reduction).

In doing so, a DEF urea solution (diesel exhaust fluid) is injected into the exhaust gas system.

The DEF consumption represents approx. 2.5 % of the diesel consumption.

If a serious error occurs, the system reacts by reducing the power of the motor.

The DEF urea solution is sold e.g. under the brand names AdBlue, AUS 32 and Aria 32.

Protective gloves and protective goggles must be worn when handling DEF.

DEF crystallises at -11 °C, and above +35 °C, a hydrolysis reaction begins (degradation into ammonia and carbon dioxide).

The DEF tank must only be filled with DEF. Filling with other media can result in destruction of the system.

System monitoring

Emission-relevant errors include:

- DEF fill level
- Catalyser efficiency / DEF® quality
- Manipulation
- System error

An acoustic signal is issued if there is an error.

If a serious error occurs, or if an error is not rectified, the system reacts by reducing the power of the motor.

5.3 Running gear

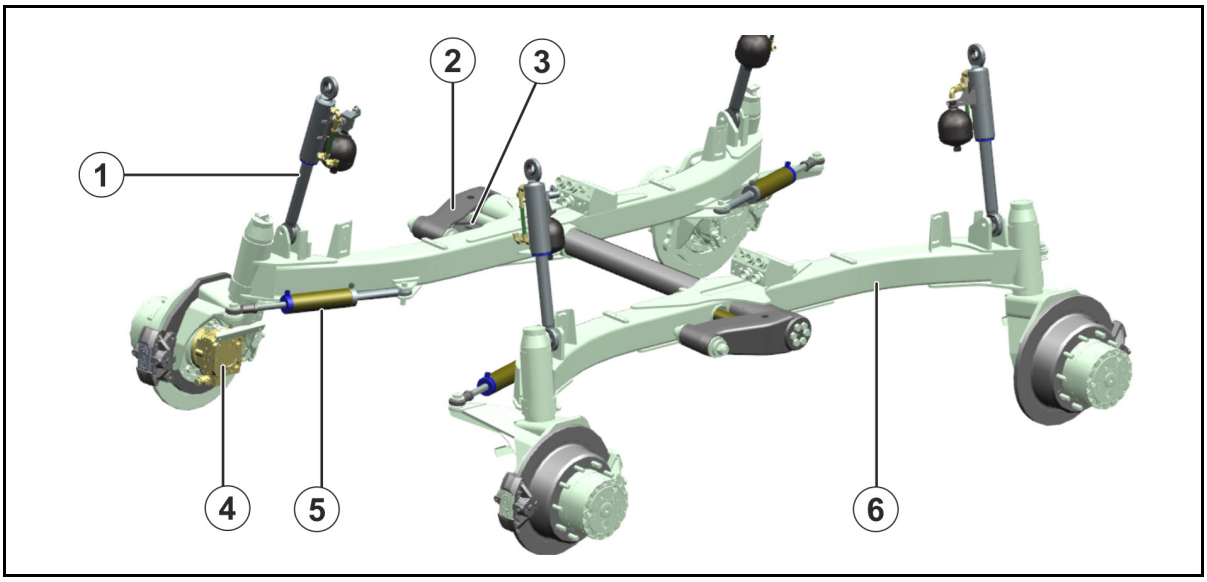

(1) Spring suspension
(2) Oscillating yoke
(3) Track width adjustment
(4) Wheel motor with disc brake
(5) Steering cylinder
(6) Tandem running gear

5.3.1 Hydraulic track width adjustment

The machine has an infinitely variable track width adjustment.

The track width of the machine can be adjusted between 1800 mm and 2250 mm to 2400 mm depending on the wheels mounted.

On Pantera W, the track width is 2,250 mm to 3,000 mm.

- The track width is adjusted and displayed via the AMADRIVE.
- When driving on public roads, the wheels are not allowed to protrude over the outer dimensions of the machine.

For France only: if the track width is not adjusted small enough for road travel, the AMADRIVE will display a warning message and limit the speed.

The track width is entered via the AMADRIVE and adjusted during an automatic adjustment drive.

5.4 Pantera-W with maximum track width of 3 metres

The transport width of the Pantera-W is 2.75 m.

- Observe the country-specific guidelines for the maximum permissible width of the vehicle on public roads..
- When travelling on roads, reduce the track width so that the transport width of 2.75 m is maintained.

The maximum width of the machine is 3.46 m.

Track width for travelling on roads

Track width 3.0 m

5.5 Pantera H with hydraulic height adjustment

The hydraulic height adjustment is used for lifting the machine on the field in order to increase the free passage under the machine.

- The machine height is adjusted and displayed via AMADRIVE.
- Always completely raise / lower the machine.
- Lower the machine again for travelling on the road.

DANGER

Risk of accident from the raised machine tipping over as a result of the higher centre of gravity.

Always drive with great caution on slopy terrain.

If tipping to the side occurs during the height adjustment due to a fault, cancel the procedure and lower the machine.

Machine lowered (default position)	Machine raised (only for driving on the field)
	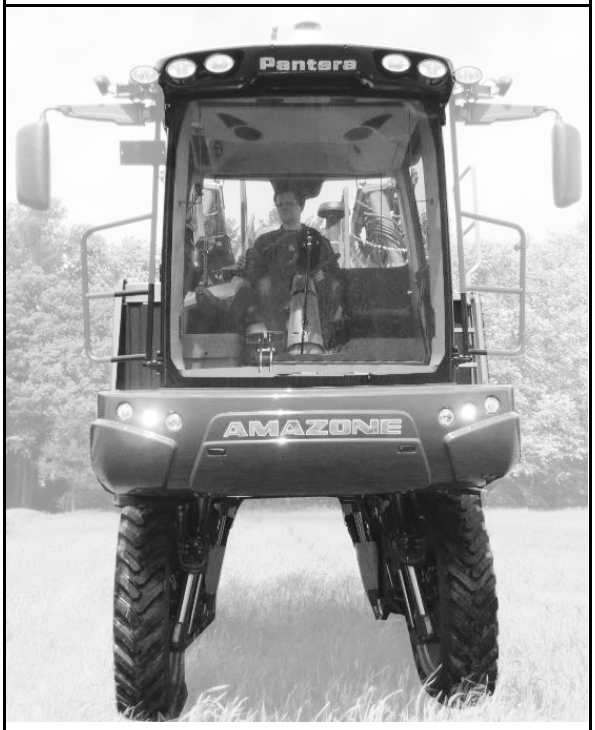

5.6 Steering

Select the steering via AmaDrive according to the requirements.

2 guide wheels

possible in road and field mode!

For driving in the tramline

- The front wheels are steered with the steering wheel.
- The automatic steering system keeps the rear wheels parallel to the longitudinal axle.

(yellow) 4-wheel steering

Only possible when in field mode!

For driving on the headland.

- Steering of all four wheels is carried out using the steering wheel.

→ Above 6 km/h, the 4-wheel steering is limited.

→ Above 12 km/h, the 4-wheel steering is switched off.

(green) Crab steering with automatic rear wheel steering

Only possible when in field mode!

For driving transverse to the orientation of the machine.

- Steering of all four wheels is carried out using the steering wheel.

Manual rear wheel steering

Only possible when in field mode!

For driving across a slope.

- For manual steering of the rear wheels using AmaPilot.
- The front wheels are steered with the steering wheel.

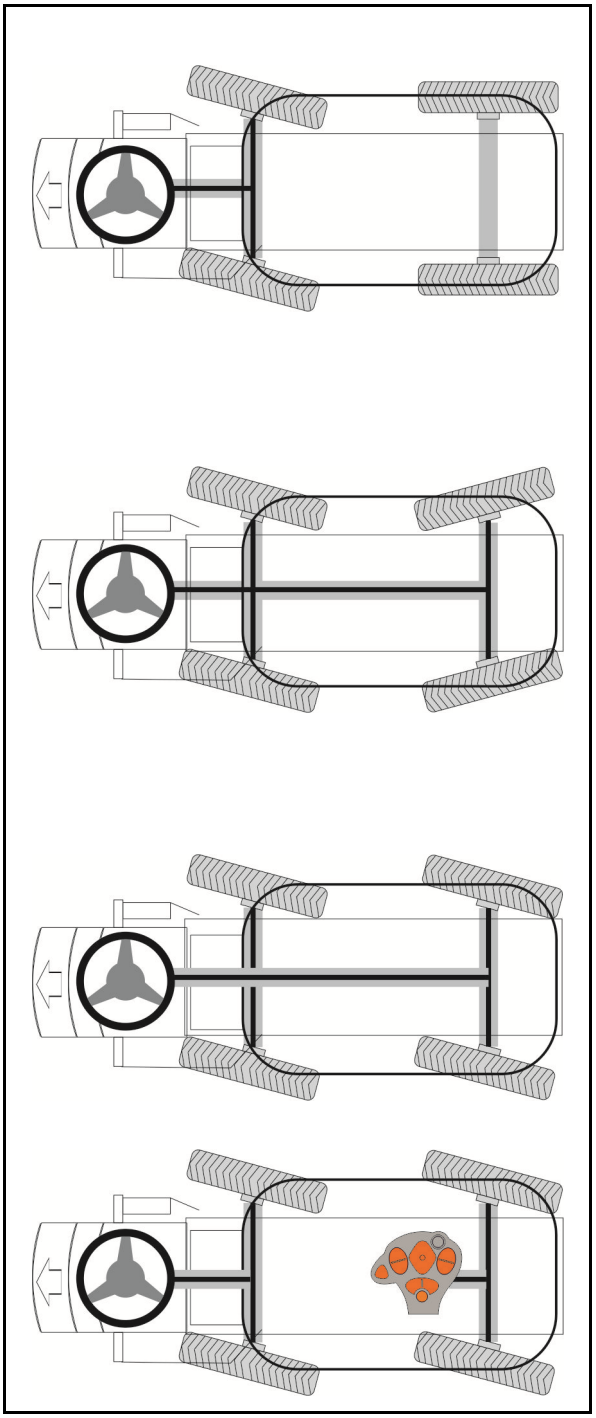

Rear wheel steering safety function: The rear wheel steering is deactivated when the driver leaves his seat.

Reactivate the rear wheel steering using the driving lever (see Amadrive message).

→ The rear wheels can steer immediately!

5.6.1 Perform a track correction

CAUTION

- **Perform the track correction with heightened caution.**
- **Do not perform track corrections in public areas.**

- Perform the track correction every day.
- Perform the track correction with:
  - low forward speed,
  - 4-wheel drive switched on.

Perform a track correction, front

1. Turn the steering wheel to the left as far as it will go and keep it there.
2. Keep the button pressed forwards for a minimum of three seconds.
3. Let go of the button and then turn the steering wheel to the right as far as it will go and keep it there.
4. Keep the button pressed forwards for a minimum of three seconds.
5. Let go of the button and then turn back the steering.

Perform a track correction, rear

1. Turn the manual rear-wheel steering (via the multi-function stick) to the left as far as it will go and keep it there.
2. Keep the button pressed backwards for a minimum of three seconds.
3. Let go of the button and then turn the manual rear-wheel steering (via the multi-function stick) to the right as far as it will go and keep it there.
4. Keep the button pressed backwards for a minimum of three seconds.
5. Let go of the button and then turn back the steering.

After correcting the track, drive a short distance straight ahead and check the alignment of all of the wheels. Repeat the track correction if necessary.

5.7 Traction control system

The machine is equipped with an automatic traction control system.

The electronic traction control system continues to monitor each wheel and regulates the drive torque of the wheel motors.

5.8 Wheel gears

The wheel motor transmits its power to the wheel through the wheel gear.

The wheel gears are available in 2 reduction stages.

- Gear reduction 1:23.5 - Standard
  - Standard
- Gear reduction 1:30
  - Optional (Pantera+)
  - Increased torque for rides uphill uphill
  - Maximum speed is limited to 40 km/h

5.9 Mudguards

Mudguard width 550 mm

- Standard
- Total width of the machine: 2550 mm

Mudguard width 700 mm

- Optional
- Total width of the machine: 2865 mm
- Machine is equipped with warning signs

When using the wide mudguards in road traffic, please observe the country-specific specifications for the permissible total width of the machine.

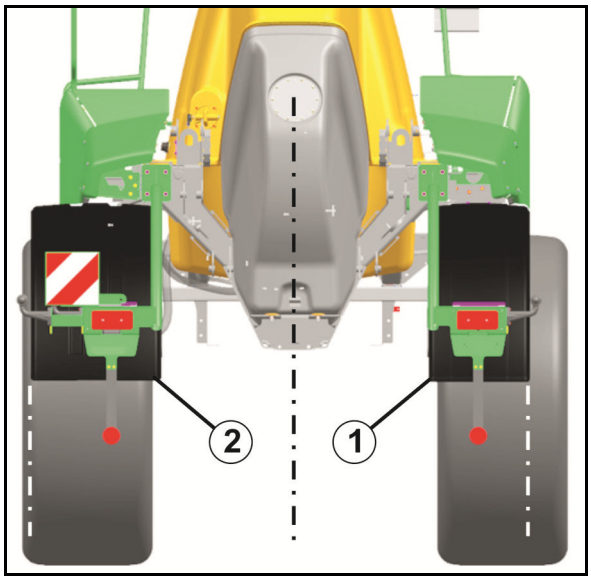

5.10 Hydro-pneumatic spring suspension

The hydro-pneumatic spring suspension contains an automatic level regulation device independent of the load status.

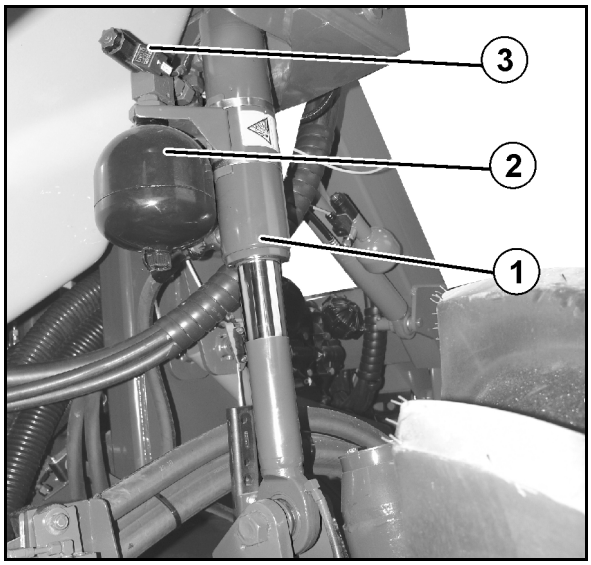

(1) Hydraulic cylinder

(2) Pressure accumulator

(3) Valve unit

Before loading the machine, lower it using the hydropneumatic spring suspension.

- To do so, the oil is drained from the cylinders of the spring suspension.
- This prevents swinging up of the lashed machine.
- Lowering and lifting of the machine via AmaDrive, see section about AmaDrive.

DANGER

Risk of crushing parts of your body between the running gear and the body when lowering the machine!

Instruct persons away from the machine before lowering the implement.

CAUTION

Risk of colliding machine parts when lowering the machine.
The track width must be previously set to the minimum value:

Pantera: 1.95 m / Pantera-W: 2.40 m.

5.11 Folding wheel chock

The wheel chock is attached with a wing bolt in the front stowage compartment under the cab.

Press the button to put the folding wheel chocks into operating position and apply directly on the wheels before uncoupling.

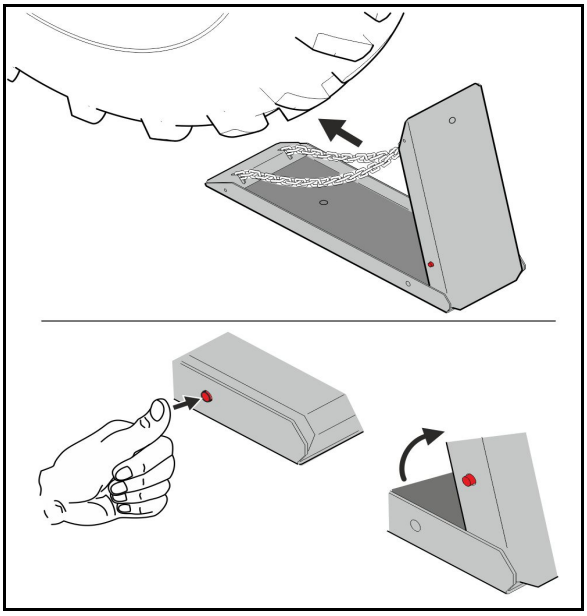

5.12 Hydraulic system

5.12.1 Hydraulic pumps

- The drive pump drives the 4 parallel switched wheel motors in a closed circuit.
- The feed pump supplies the system with leakage oil and flushing oil.
- The spraying pump is driven by a hydraulic regulating pump. The operating pressure of the pump is adjusted automatically depending on the output required.
- The regulating pump with constant pressure controller supplies the steering system and hydraulic cylinder with oil.

Adjusting and checking the system is carried out in the factory. Normally, the settings do not need to be corrected.

The operator requires special tools and special knowledge of the system in order to adjust the highest pressure, the operating pressure and the speed. This is why the adjustment work may only be carried out in the factory.

5.12.2 Hydraulic wheel motors and gearbox

- The 4 motors and the driving pump must all be precisely adjusted to each other.
- Have all repair work or adjustments carried out by a specialist workshop.

5.12.3 Hydraulic oil tank

The hydraulic fluid tank is located on the right side of the machine. It can be accessed when the side panel is folded up.

(1) Hydraulic fluid tank
(2) Inspection glass for fill level
(3) Fill opening with integrated oil filter
(4) Electric sensor for measuring the oil level

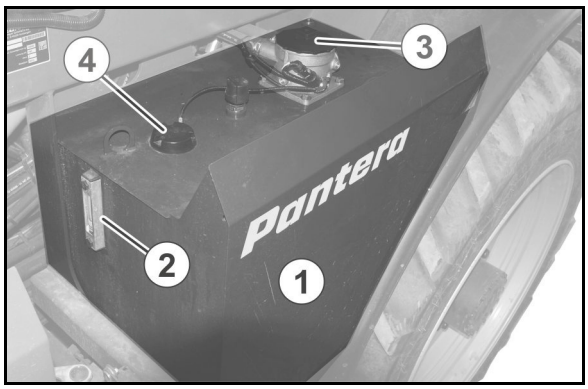

5.13 Radiator

The machine is equipped with a total of four radiators on both sides behind the cabin.

Right side:

- Radiator for the engine cooling water
- Condenser of air conditioner

Left side:

- Radiator for hydraulic oil
- Radiator for charged air of the turbocharger

The air flow through the radiator may not be obstructed.

For this reason the radiators have to be checked on a regular basis and cleaned using compressed air.

5.14 Driver's cabin

The driver's cab is one Category 4 cab with cab air filtration, with positive pressure control and activated charcoal filter against dust, aerosols and vapours (gases) according to DIN EN 15695-1, see on page **89**.

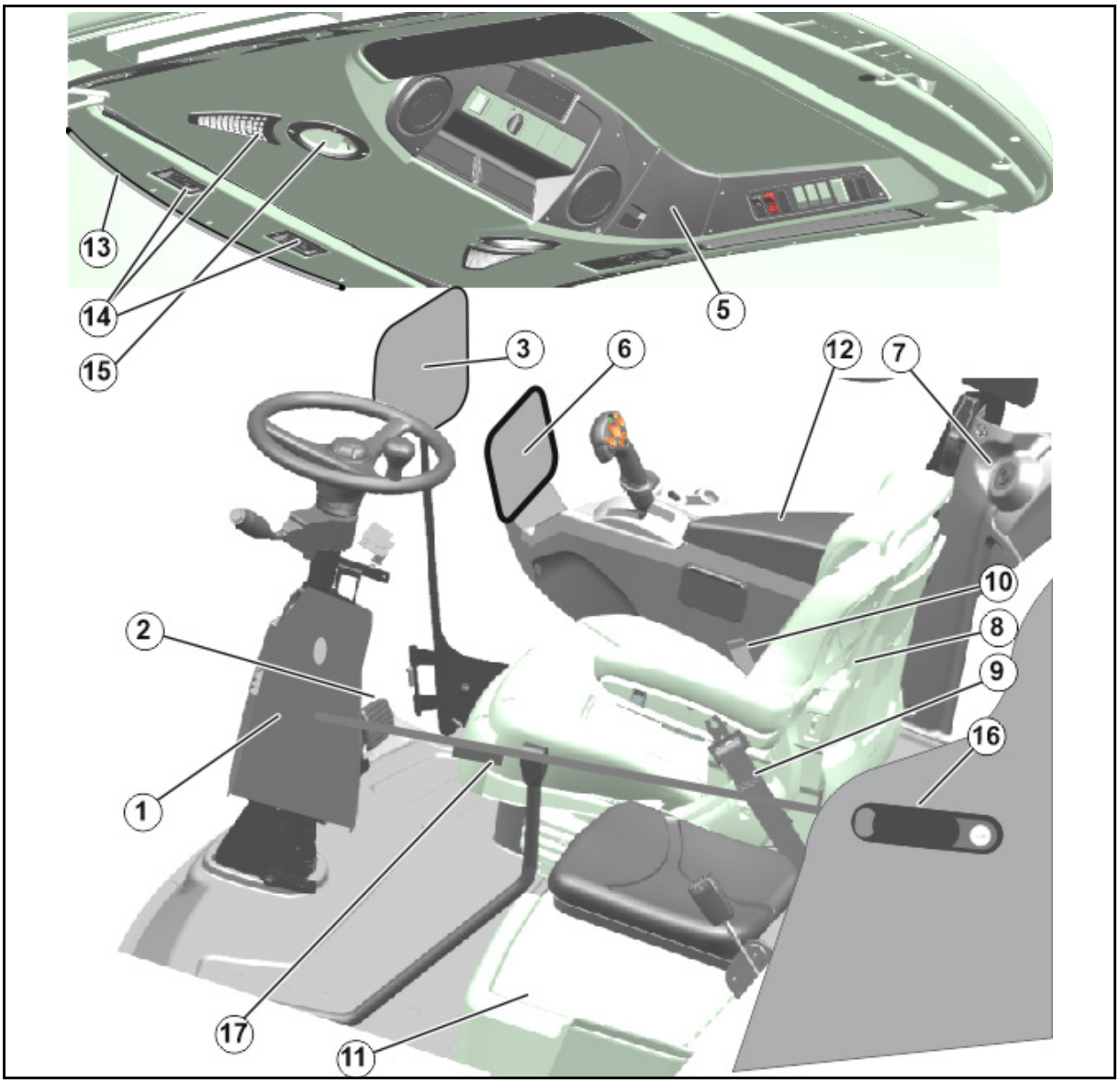

(1) Steering column with multi-function switch

(2) Brake pedal

(3) Field sprayer operation

(4) Operating elements: Comfort and light

(5) Operating elements: Safety and maintenance

(6) Control terminal AMADRIVE

(7) Ignition lock

(8) Driver's seat

(9) Seat belt for wearing on the drivers seat

(10) Seat belt buckle

(11) Folding helper's seat with cooling compartment underneath

(12) Height-adjustable and folding armrest and operating unit

(13) Sunblind

(14) Ventilation nozzles

(15) Loudspeaker

(16) Door handle with lock

(17) Door opening on the inside

- The helpers seat must only be used for manoeuvring trips.
- Drive the machine only when wearing the seat belt.

5.14.1 Foldable access ladder

You can access and exit the cabin via the foldable ladder.

- The access ladder is lowered and raised via a switch in the cabin.
- The AMADRIVE displays the position of the ladder.

The ladder can also be folded down when the diesel engine is turned off.

WARNING

Risk of injuries from falling from the cabin.

- When leaving the cabin, make sure that the ladder has been lowered completely.

  You cannot see if the ladder has been lowered from inside the cabin.
- Climb up and down the ladder facing the machine (3 point rule).

An acoustic signal sounds as soon as the driver leaves the drivers seat if the ladder has not been lowered completely.

5.14.2 Steering column with multi-function switch and brake pedal

The steering column has the following functions:

(1) Steering wheel

(2) Multi-function switch

(3) Steering column adjustment, forwards / backwards

(4) Steering wheel adjustment, forwards / backwards

(5) Steering wheel adjustment, higher / lower

(6) Brake pedal

(7) Light module

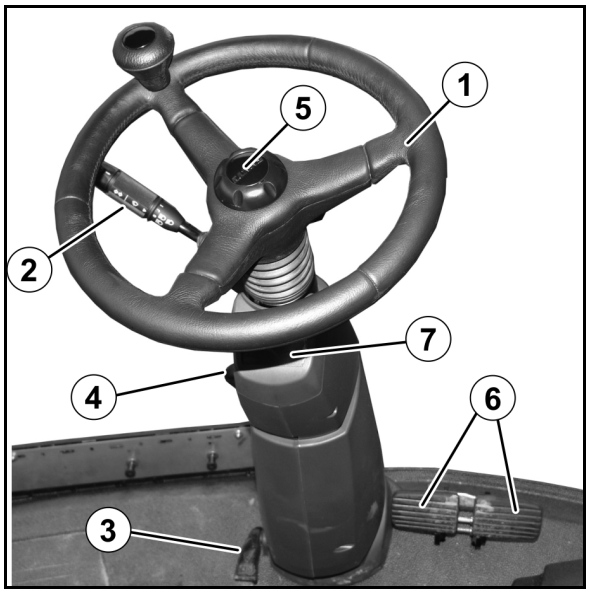

Multi-function switch

Press in: Horn

Upwards: High beam

Downwards: Dipped beam

To the front: direction indicator, right side (in field mode: side-view floodlight, right side)

To the rear: direction indicator, left side (in field mode: side-view floodlight, left side)

Press in the ring:

→ Windscreen washer system

Turn the ring:

→ Windscreen wiper, switch on / fast

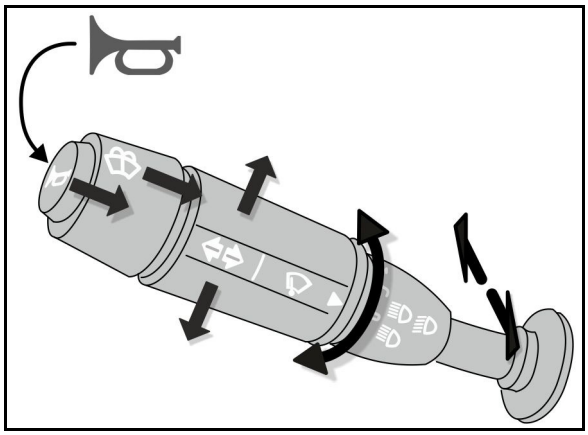

Brake pedal

Always use the brake pedal for emergency braking.

- The machine can be slowed down using
  - o the brake pedal.
  - o the driving lever.

→ The delay via the driving lever may be sufficient depending on the driving situation.

- When braking using the brake pedal, the slowing down is carried out by the brake system and the hydrostatic

After performing the braking using the brake pedal, the driving lever must briefly be moved to the neutral position before continuing to drive.

Braking with the brake pedal

- Until standstill:

→ Before continuing to drive, briefly put the driving lever in the neutral position.

- To reduce the forward speed:

→ After the brakes are released, the machine accelerates to the speed selected using the driving lever.

Light module

(1) No function
(2) Battery charger lamp
(3) Indicators of the machine
(4) High beam display
(5) No function
(6) No function

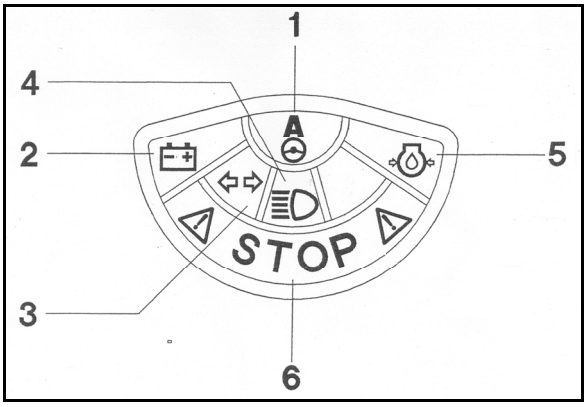

5.14.3 Adjusting the driver's seat

The drivers seat is spring suspended and has various adjustment options.

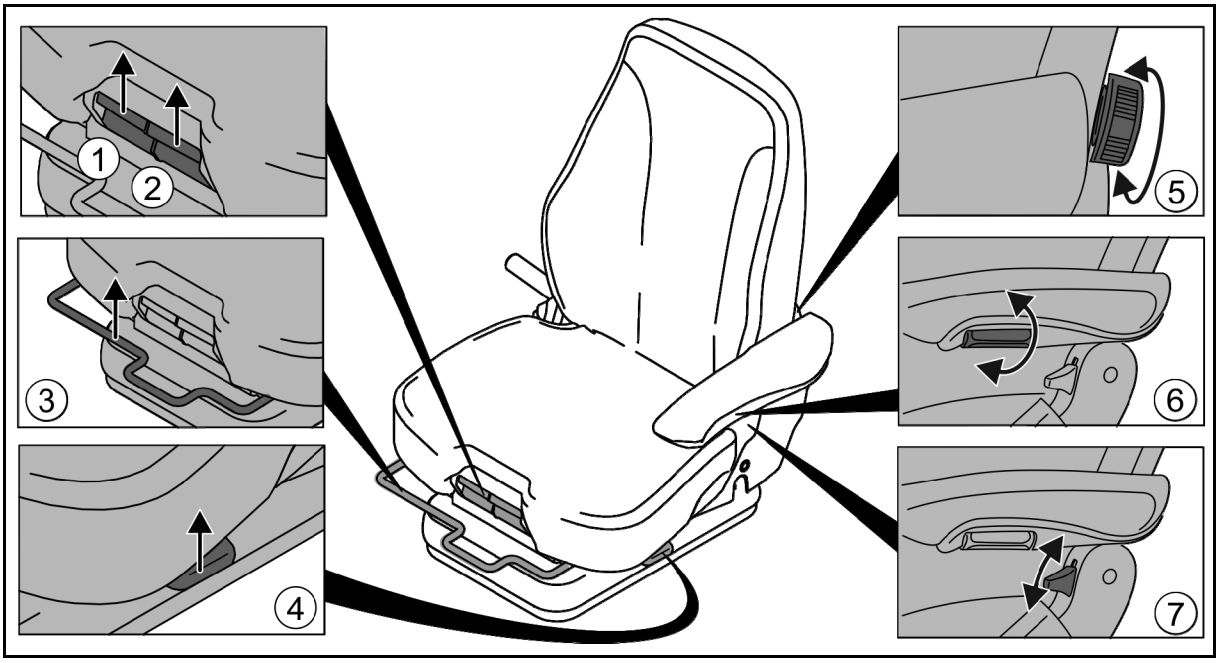

Adjustments:

(1) inclination of the seat surface

(2) move the seating surface to the front / rear

(3) move the seat to the front / rear

(4) seat height

(5) backrest

(6) inclination of the armrests

(7) inclination of the backrest

5.14.4 Control panel

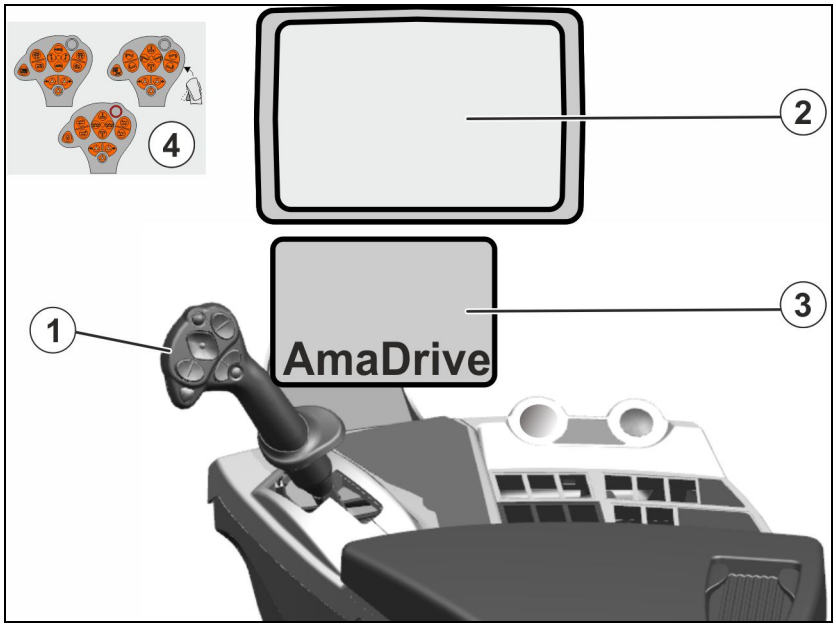

(1) Driving lever with multi-function stick

(2) Control terminal ISOBUS

(3) Control terminal AMADRIVE

(4) Sticker with the AMAPILOT functions

When operating the multi-function handle, also observe the operating instructions of the software ISOBUS!

Switches and buttons on the control panel

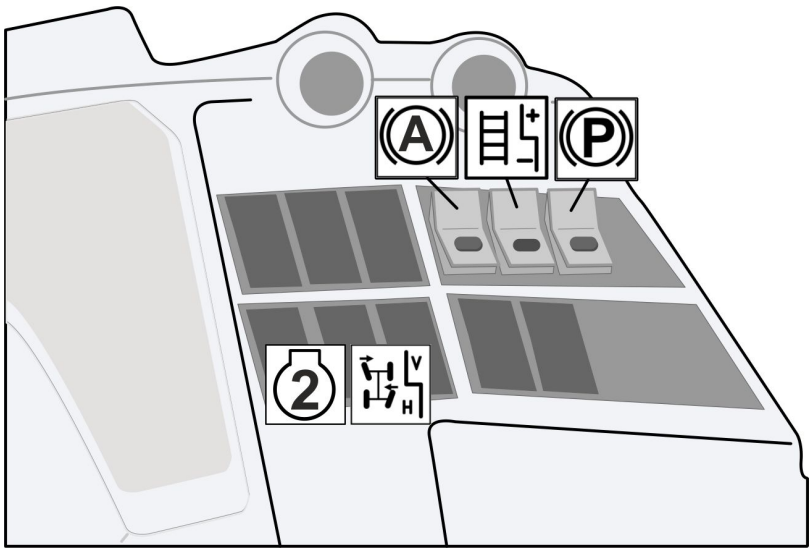

- AutoHold button as an assistant when moving off on slopes

  When the machine is at a standstill, AutoHold activates the parking brake.

  → When the driving lever is pushed forward again, the parking brake is automatically released.

- Button for actuating the cab access ladder

  - Position **+**: Lifts the ladder
  - Position **-:** Lowers the ladder

- Actuate / release the parking brake button

→ Release the parking brake only when simultaneously actuating the foot brake

- Button for aligning the track

- Switch the external hydraulic motor drive on / off (via hydraulic connection at the rear)

5.14.5 Operating elements, Comfort and Light

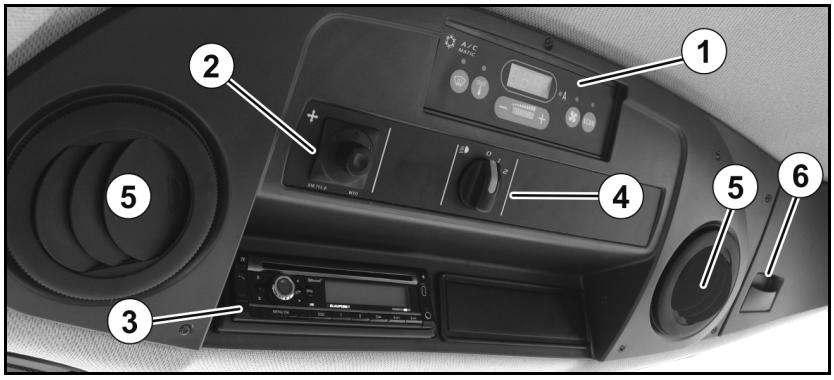

Fig. 1

On the inside of the roof, you will find the switch for the ventilator, the heater, the air conditioner, the travelling lights, the mirror adjustment and the radio.

(1) Automatic air-conditioning system

(2) Mirror adjuster switch

(3) CD radio with Bluetooth hands-free system

(4) Rotary switch with parking light and driving light

(5) Ventilation nozzles

(6) Cooling compartment

5.14.6 Operating elements, Safety and Maintenance

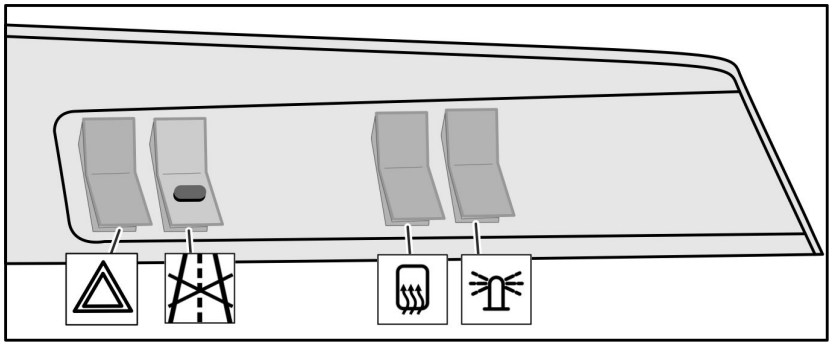

- Hazard warning signal switch
- Road / field travel switch with locking mechanism for the road travel position
- Mirror heater switch
- Warning beacon switch (optional)
- Warning light and 3-level switch for air filtration

5.14.7 Rear right side in the cabin

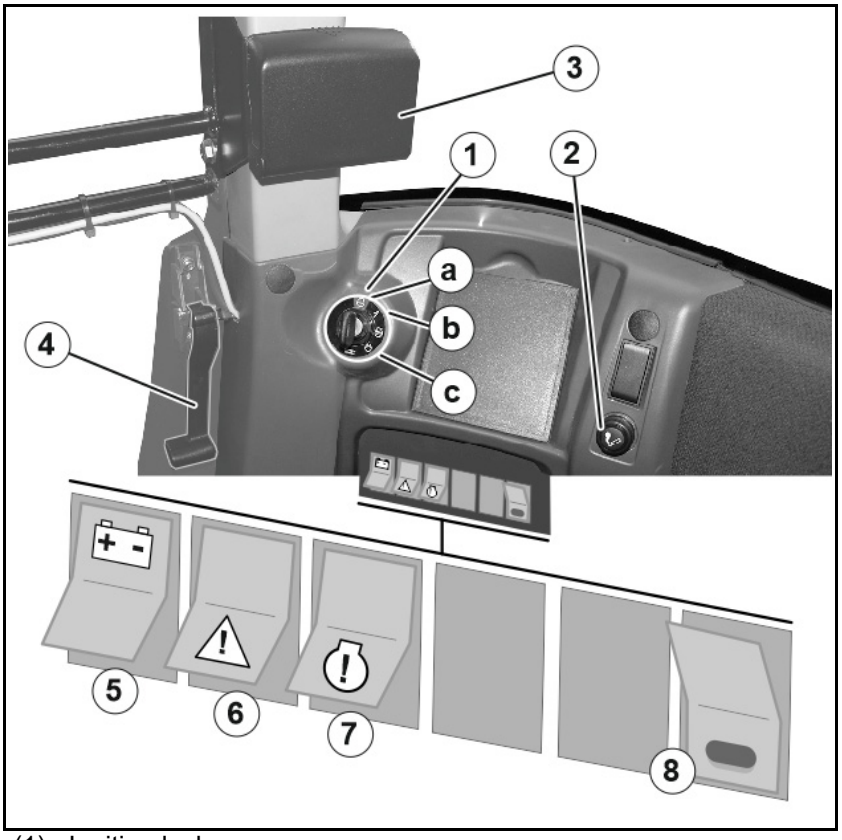

(1) Ignition lock

(a) Engine off

(b) Power supply on

(c) Start the engine

(2) Cigarette lighter

(3) Drink holder

(4) Unlocking device for the emergency exit

(5) Power supply

- o Switch on the power supply before starting to drive.
- o The power supply is automatically interrupted 2 hours after the ignition key is removed.

(6) Override for bypassing engine errors

(7) Safety shutdown for bypassing safety errors.

If a safety function locks drive, this button can be used to activate the drive again.
For example, to move the machine out of a danger zone. The maximum speed in this case is 10 km/h.

(8) Switching off the power supply prematurely, e.g. for maintenance work

→ To do so, actuate the yellow switch with lock at the same time as the power supply.

- 12V socket behind the driver's seat

Override button

If the cooling water is low, the motor stops automatically.

After pressing the Override button, the motor can be started again and the machine can be run for 30 seconds.

The button can be pressed several times.

If there is an error in the motor control unit, then the Override button will flash, see AMADRIVE.

5.14.8 Armrest

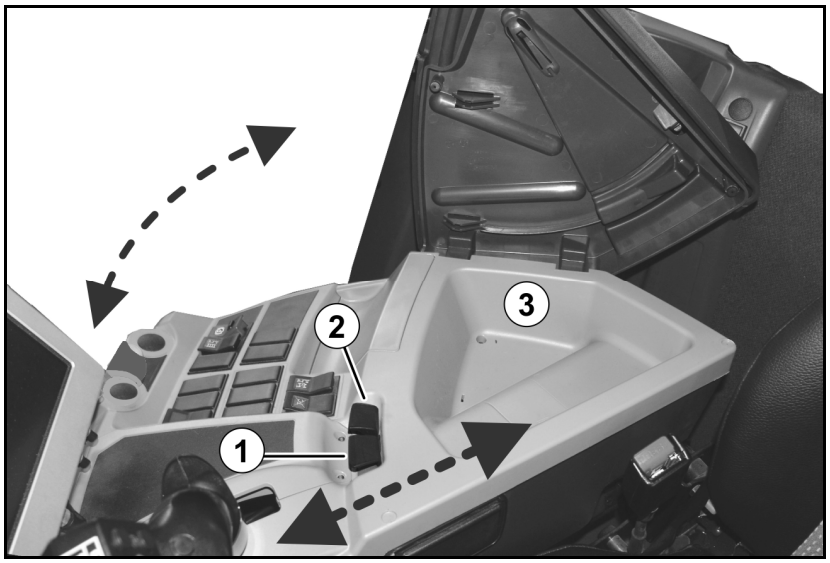

(1) Moving the armrest

(2) Pivoting the armrest

(3) Storage compartment under the armrest

5.14.9 Cooling compartment and ashtray

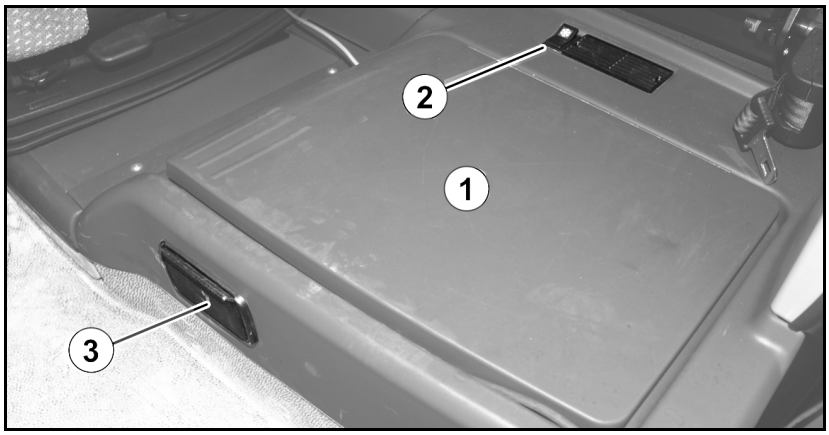

Under the helpers seat:

(1) Cooling compartment

(2) Switch for the cooling compartment

(3) Ashtray

5.14.10 AmaTron / AmaPad control terminal to control the field sprayer

AmaTron 4

AmaPad 2

Base functions:

- entry of the data in the spraying technology.
- entering the job-related data.
- controlling the field sprayer to change the spray rate used in spraying operation.
- the operation of all functions on the sprayer boom.
- the monitoring of the field sprayer during spraying operation.

GPS options

- Fully automatic part width section control
- Parallel driving aid (integrated in the GPS switch application)

5.14.11 Driving lever with multi-function stick

5.14.11.1 Driving lever

The driving lever is used for

- o continuously variable accelerating and decelerating of the vehicle,
- o driving forwards and backwards.

(1) maximum speed driving forwards, accelerations

(2) neutral, park, braking

(3) maximum speed driving backwards

→ The speed is dependent on the displacement of the driving lever

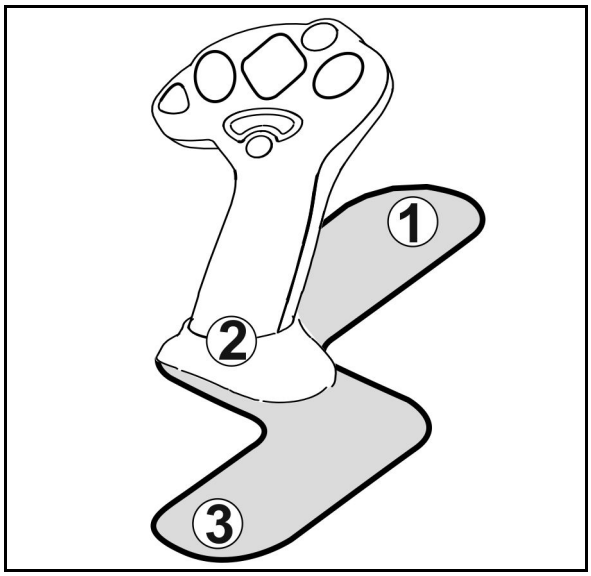

> A trailer being towed is also braked via the driving lever using the pneumatic brake system.

5.14.11.2 AmaPilot+ multi-funktion stick

The implement functions can be executed using the AmaPilot+.

AmaPilot+ is an AUX-N control element with freely selectable button assignment.

A default button assignment is pre-configured for every Amazone ISOBUS implement.

The functions are spread over 3 levels and can be selected by pressing with your thumb.

In addition to the standard level, two other control levels can be switched.

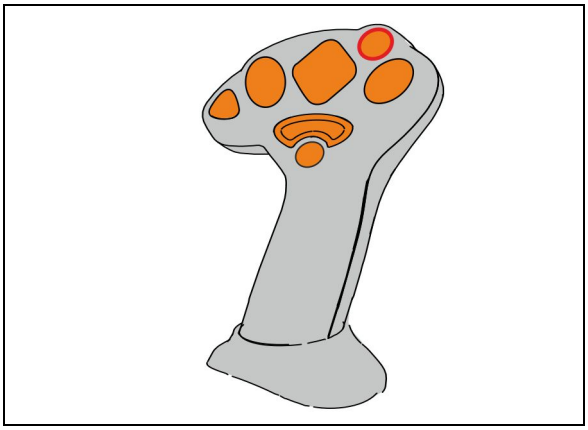

A sticker with the default assignment can be stuck in the cab. For a freely assigned key assignment, a new sticker can be applied over the default assignment.

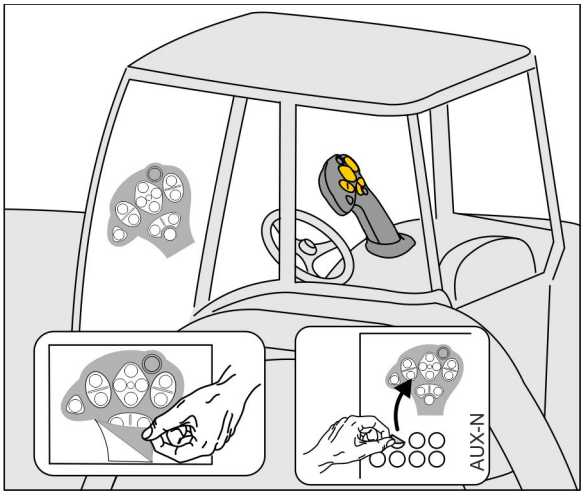

- Standard level,
  Illuminated button is green.

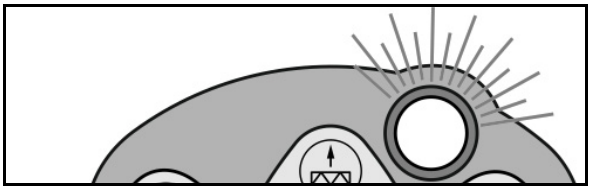

- Level 2 when trigger on the back is held,
  Illuminated button is yellow.

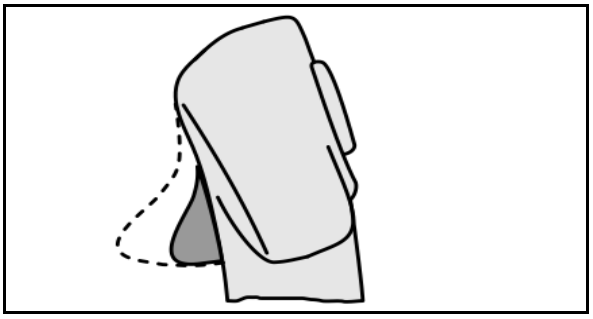

- Level 3 after pressing the illuminated button,
  Illuminated button is red.

AmaPilot+ with fixed assignment / default assignmen

Standard level, green

Switch on / off boom part width sections, left side	Switch on / off boom part width sections, right side
Switch spraying on / off	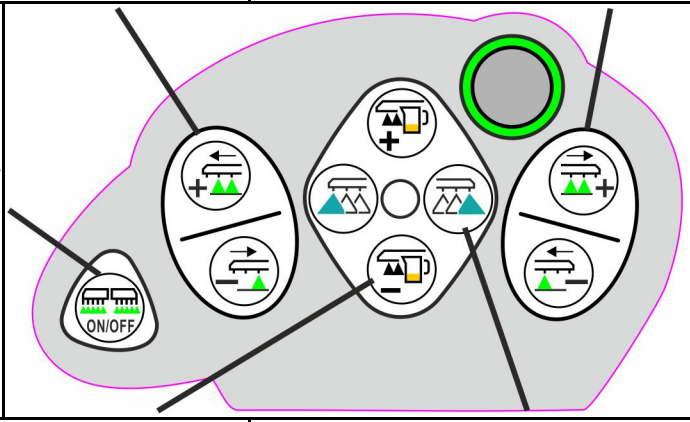
Reduce / increase application rate	Boundary nozzles left side / right side

Level 2, yellow

Angle in / out boom left side	Angle in / out boom right side
DistanceControl Mirror boom	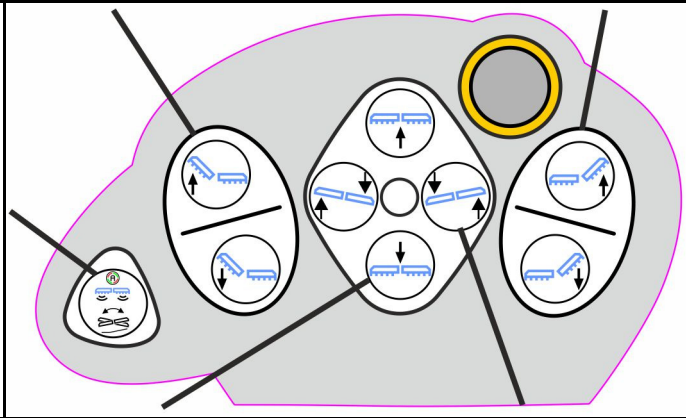
Raise / Lower boom	Angle of sprayer boom

Level 3 red

Fold boom on left side in / out	Fold boom on right side in / out
Lock / unlock swing compen- sation	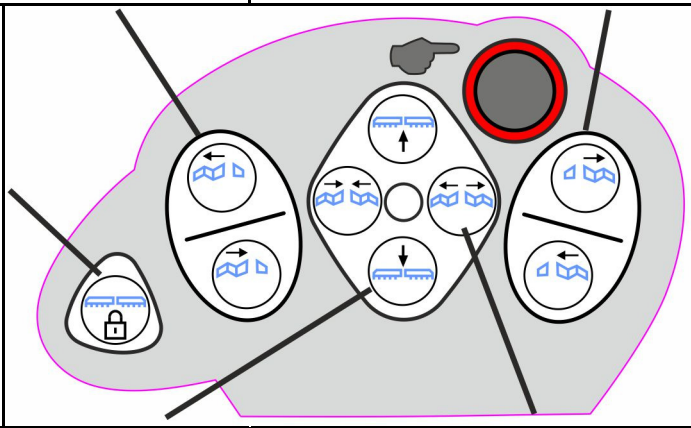
Raise / Lower rod boom	Fold boom in / out

Functions on all levels:

Rear wheel steering to the left	Rear wheel steering to the right
Switchover 2 <->4 wheel steering	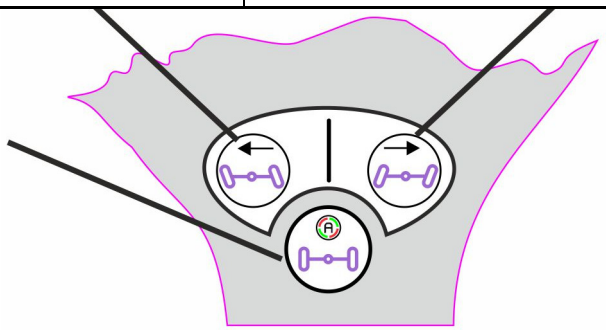

5.14.12 Air conditioner

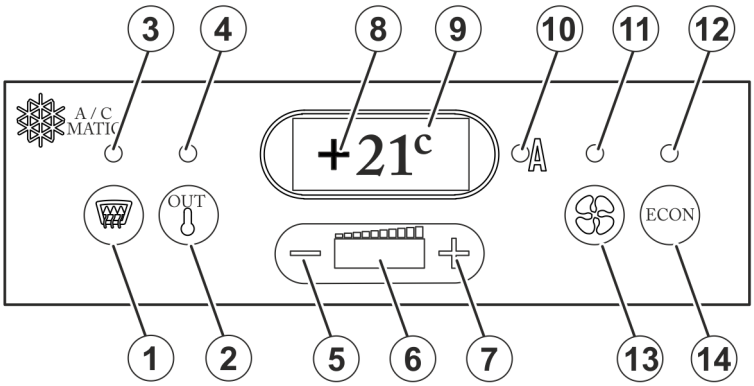

(1) Switch on and off / REHEAT - Function

(2) Toggle set temperature display / outside temperature display.

(3) LED: Lights up when REHEAT is switched on.

(4) LED: Lights up when the outside temperature is shown in the display.

(5) Setting the desired cabin temperature down or fan speed.

(6) LED bar display indicates the evaporator fan speed of 0 - 100%.

(7) Setting the desired cabin temperature upwards or fan speed when the manual fan speed has been selected.

(8) Three-digit seven segment display for showing the desired cabin temperature / outside temperature / error codes in event of malfunction.

(9) Displays the unit in Celsius or Fahrenheit

(10) LED: Indicates fully-automated mode.

(11) LED: Lights up when the evaporator fan speed has been set manually.

(12) LED, lights up when in ECON mode.

(13) Toggle button evaporator fan speed manual / automatic

(14) Switch on the ECON mode (Compressor off)

Put the automatic air conditioning system into operation

When the engine is standing still and the ignition is switched on, the evaporator fan speed reduces to 30 % of the nominal speed after 10 minutes. This takes place to prevent faster discharging of the battery.

The software version is displayed for 3 seconds after switching on the ignition. The controller carries out a self-test. The executing of the self test takes about 20 seconds.

In order to prevent faulty temperature controlling of the automatic system, close the cooling compartment flap immediately after use.

Set the cabin temperature

The cabin temperature is displayed in display field 8. The cabin temperature can be adjusted by pressing buttons 5 and 7.

- Reduce temperature: **-** Pressing once → -1° C
- Increase temperature: **+** Pressing once → +1° C

Set the evaporator fan speed

- **Automatically:** Button 13; LED 10 lights up.
- **Manually:** Press toggle button 13; LED 11 lights up. The manual fan speed is shown. You can set the desired speed using the buttons 5 (-) and 7 (+).

Switch on ECON mode

The compressor of the air conditioner is switched off in ECON mode.

- Switch on ECON mode: Press button 14; LED 12 lights up.

  The evaporator fan speed currently indicates 40% on the light strip display (6). The evaporator fan and the heater are also controller automatically in ECON mode.
- Switch on ECON mode: Select button 14.

REHEAT mode

(Defog the cabin windows)

- Switch on REHEAT mode: Press button 1; LED 3 lights up. REHEAT mode is activated.

  The fan speed is 100% and after switching the button 13, can be controlled manually using button 5 (-) and 7 (+).

  The compressor is switched on continuously in REHEAT mode for dehumidifying the room air.
- Switch off REHEAT mode: Press button 1 again

Toggle ° Celsius / °F

- Press button 2 and 5 at the same time for approx. 3 seconds.

  Pressing the buttons 2 and 5 again switches the display back to degrees Celsius.

Malfunction / fault (displayed flashing)

F0		Room temperature sensor fault
→	Blue	Switching outputs are switched off.
F1		Outlet air temperature sensor malfunction
→	Yellow	Switching outputs are switched off
F2		Outside air temperature sensor fault
→	Red	Switching outputs are still ready for operation

Important information about the air conditioner

CAUTION

1. **Avoid any contact with the refrigerant. Wear protective gloves and goggles!**
2. **When sprayed in your eyes, rinse with water immediately. Seek medical advice!**
3. **Have maintenance and repair work only carried out by a specialist workshop for refrigerant.**
4. **No welding tasks may be carried out on the refrigerant circuit and in the immediate vicinity - Danger of poisoning!**
5. **Maximum ambient temperature for refrigerant: 80° C**

5.14.13 Tractor cab air filtration with Category 4 safety status

5.14.13.1 Description

Function

External air is cleaned through several filter stages and freed from harmful substances before it is conveyed to the cab. A minimum air supply is ensured by operating a separate air blower fan in an external housing. The operation of the air blower fan is independent of the settings of the air conditioning system.

The protective function is also ensured when the air conditioning is switched off. Depending on the equipment options, user protection in compliance with Category 3 or 4 according to DIN EN 15695-1 is achieved.

A pressure monitoring system is installed in the tractor cab.

Layout

In the cab roof, right side

(1) Warning light

If the cab pressure falls below 20 Pascal, the warning light illuminates.

(2) 3-level switch for setting the blower fan speed.

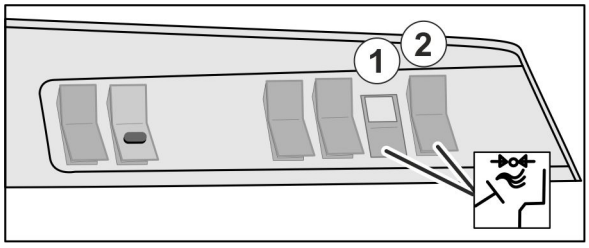

Air ducts in the roof

(1) Connecting supports
(2) Air ducts
(3) Locking plate, rear
(4) Locking plate, front

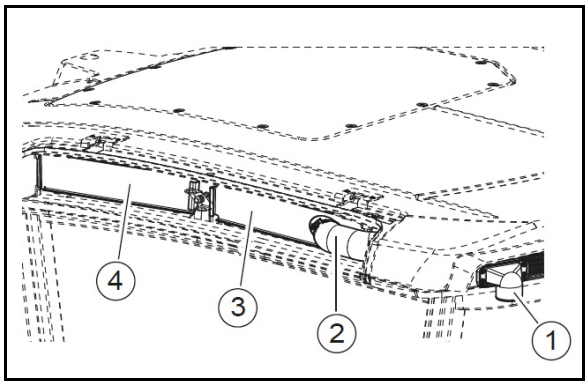

Filter housing on the machine

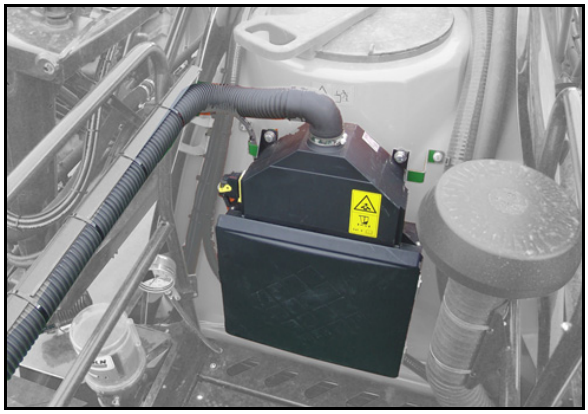

Filter housing

(1) Attachment point
(2) Fan compartment with electronics
(3) Activated carbon filter
(4) Aerosol filter
(5) Dust filter
(6) Air inlet
(7) Protective screen
(8) Handle
(9) Central connector
(10) Air outlet

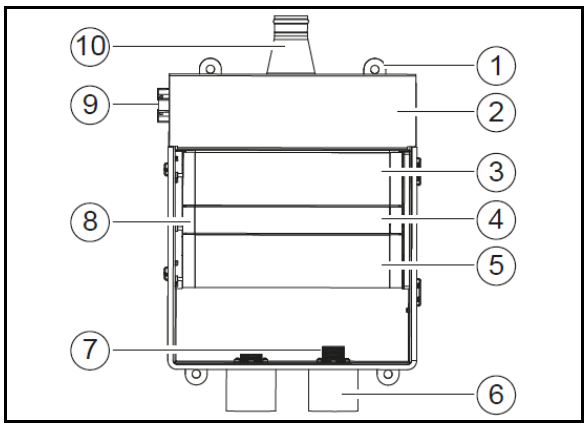

Pressure monitoring

There is a differential pressure switch in the tractor cab that monitors the minimum pressure in the cab interior. The differential pressure switch is installed on the floor at the rear of the right side of the cab.

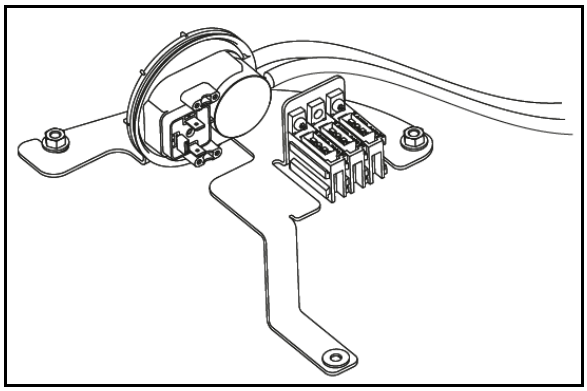

5.14.13.2 Operation

Before beginning operation:

- Check the filter screen at the air inlet of the filter box and clean if necessary.
- Perform a visual check of the inlet hose for leaks or damage.
- Check the cable routing for abrasions.

During operation:

- During operation with a new filter, select the lowest fan level. This ensures operation with a minimised external air volume flow. This has a positive effect on the service life of the filter.
- With increasing impurities, the air resistance in the filter cassettes increases. The cab pressure drops permanently and the warning light illuminates.

→ Increase the fan level manually by one level. The fan level can be increased twice.

The activated carbon filter has to be replaced every three months regardless of the operational hours.

5.14.14 Covers and compartments outside the cab

Under the cab

On the left side behind the cover:

- Small storage bin under the cab step

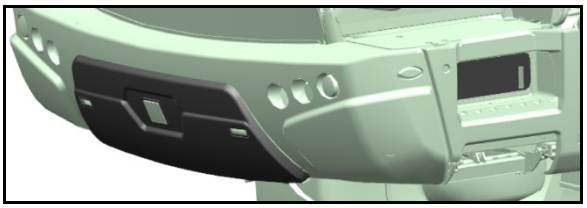

On the right side behind the cover:

- Battery
- Windscreen wiper water container
- Brake system
- Compressed air system for trailer brake and connection for compressed air (for trailer drawbar)
- Fire extinguisher (optional)

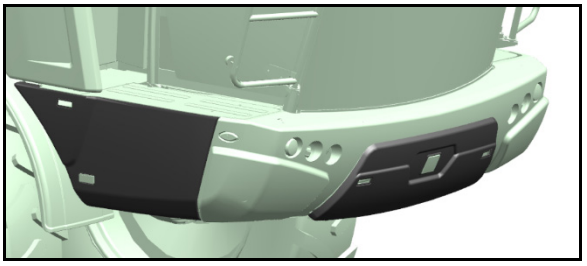

At the front behind the cover:

- Large storage bin under the cab with removable protective braces for suction hose, spray agent canisters and used filters Maximum additional load: 100 kg.
- Pressure filling connection
- Chock

5.15 Camera system (option)

WARNING

Risk of injury or even death.

If the camera display alone is used for manoeuvring, persons or objects can be overlooked. The camera system is an aid. It does not replace the operator's awareness of the immediate surroundings.

- **Before manoeuvring, ensure that there are no people or objects in the manoeuvring area by taking a direct look**

AMADRIVE is used as a display device for the cameras.

The machine can be equipped with two cameras.

- Selective display of the rear-view camera or the camera for the right front wheel.
- The rear-view camera is switched on automatically when reversing

Features:

- Viewing angle of 135°
- Heater and lotus coating
- Infrared night-view technology
- Automatic backlight compensation

(1) Rear-view camera for reversing safely.

(2) Camera for the right front wheel for driving through the tramline correctly.

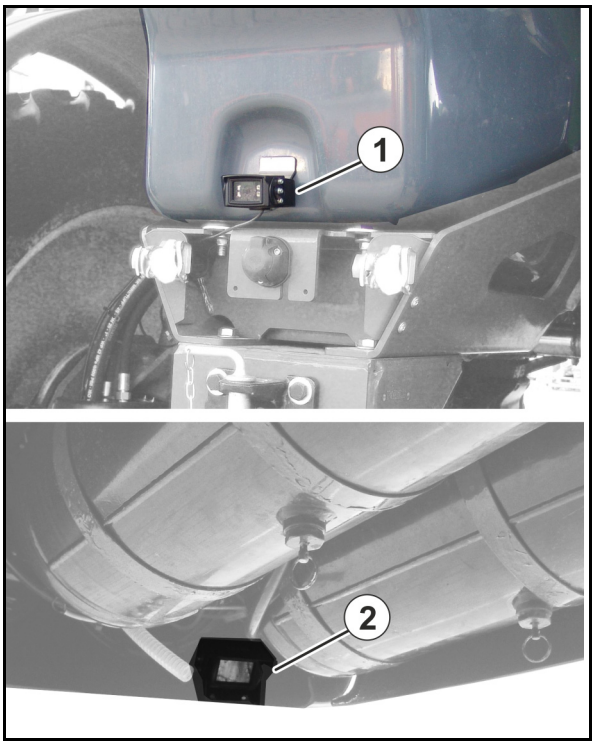

5.16 Working platform with ladder

Working platform with swivel-down ladder for reaching the driver's cab and the inspection hatch.

- The ladder is lowered or raised on the dash panel in the drivers cabin.

DANGER

Risk of accidents resulting from the ladder being pivoted down when driving.

Raise the ladder to the transport position when driving.

DANGER

Risk of falling when leaving the cabin.

Lower the ladder before leaving the cabin.

DANGER

Never climb into the spray liquid tank.

→ Risk of injury from poisonous vapours!

- **It is strictly forbidden to ride on the field sprayer!**

→ Riding on the machine creates a risk of falling!

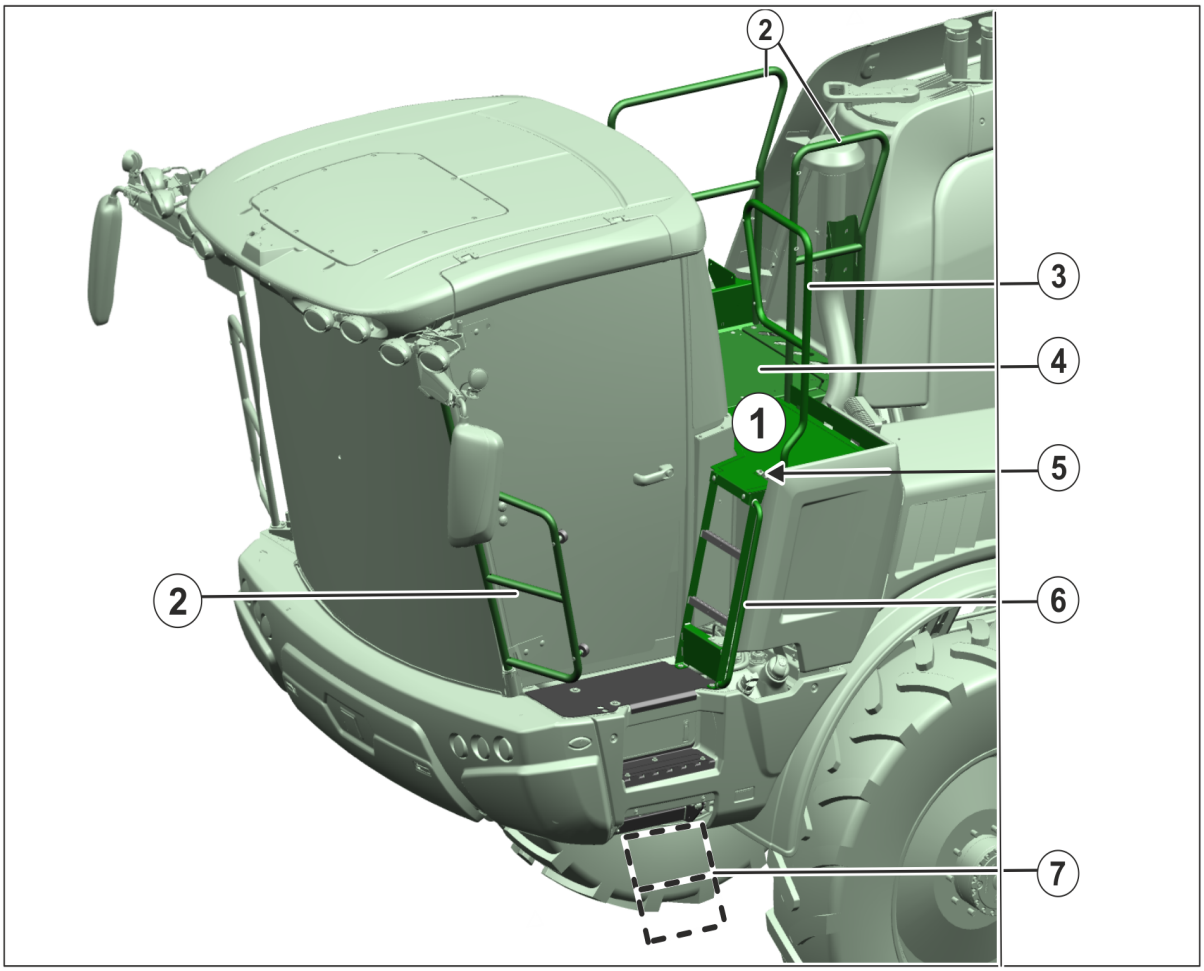

(1) Operation platform

(2) Railing to protect against falling

(3) Pivotable railing to protect against falling

The swivelling railing collides with the sprayer boom at working widths greater than
40 m.

→ Only swivel the railing outwards to access the operation platform.

The maintenance flap on the operation platform, to be opened using the square spanner.

The square spanner is located in the storage box in the drivers cabin.

(4) Maintenance flap

(5) Locking mechanism of the pivotable railing

(6) Hand rail on the ascent

(7) Hydraulically slewable ladder with switch in the dash panel

5.17 Manoeuvring device for trailers

The manoeuvring device enables manoeuvring of trailers with the Pantera.

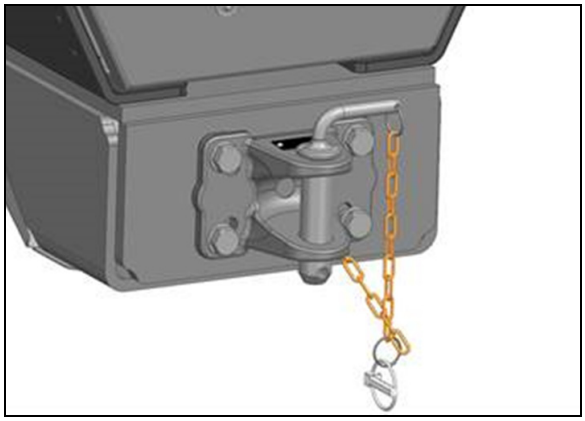

It is forbidden to use the manoeuvring device on public roads.

- Only approved for manoeuvring work at a maximum speed of 5 km/h.
- For trailers with a maximum permissible total weight of 16,000 kg.
- For trailers without drawbar load.
- For trailers with drawbar eye 40
  - ISO 5692-2,
  - DIN 11026,
  - ISO 8755,
  - DIN 74054-1 /-2 or
  - DIN 11043

Use a banksman to couple the trailer.

6 Construction and function of the field sprayer

6.1 Functionality of the field sprayer

Through the suction valve chest and the suction filter (2), the spraying pump (1) draws

- spray liquid from the spray liquid tank.
- fresh water via the external suction port (3).
- flushing water from the flushing water tank.

Thus, the drawn liquid is conveyed to

- the part-width section valves (5) via the pressure filter (4). The part-width section valves take over the distribution to the spray lines.
  Alternatively:

  through the pressure filter (4) to the single nozzle control (12).
- to the injector (6) and the induction bowl (7).
  To prepare the spray liquid, pour the required quantity of agent into the induction bowl and draw into the spray liquid tank.
- directly in the spray liquid tank.
- to the internal (8) or external cleaning switch tap (9).

The agitator pump (10) supplies the main agitator (11) in the spray liquid tank. When switched on, the main agitator ensures that the spray liquid is homogeneous.

single nozzle control

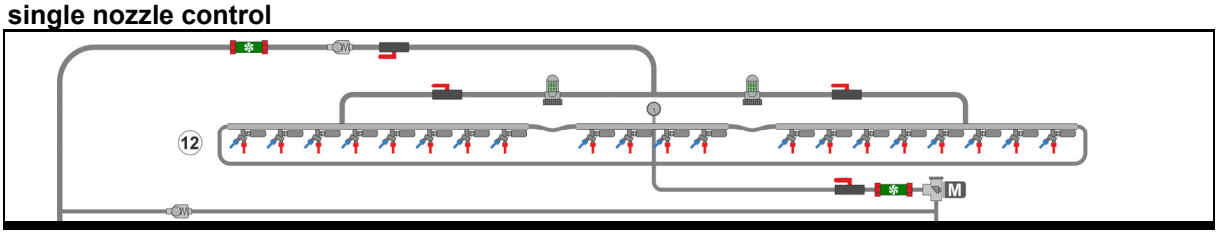

part-width section control

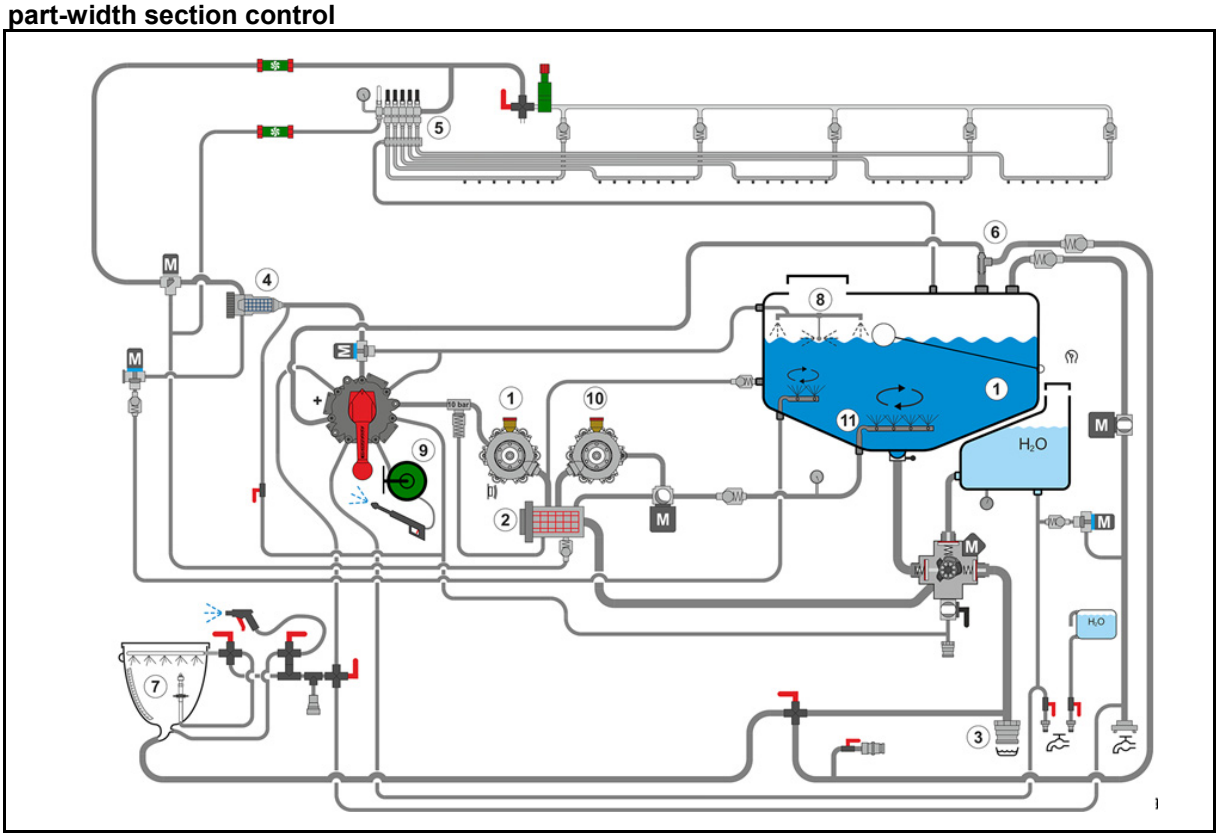

6.2 Overview control terminal

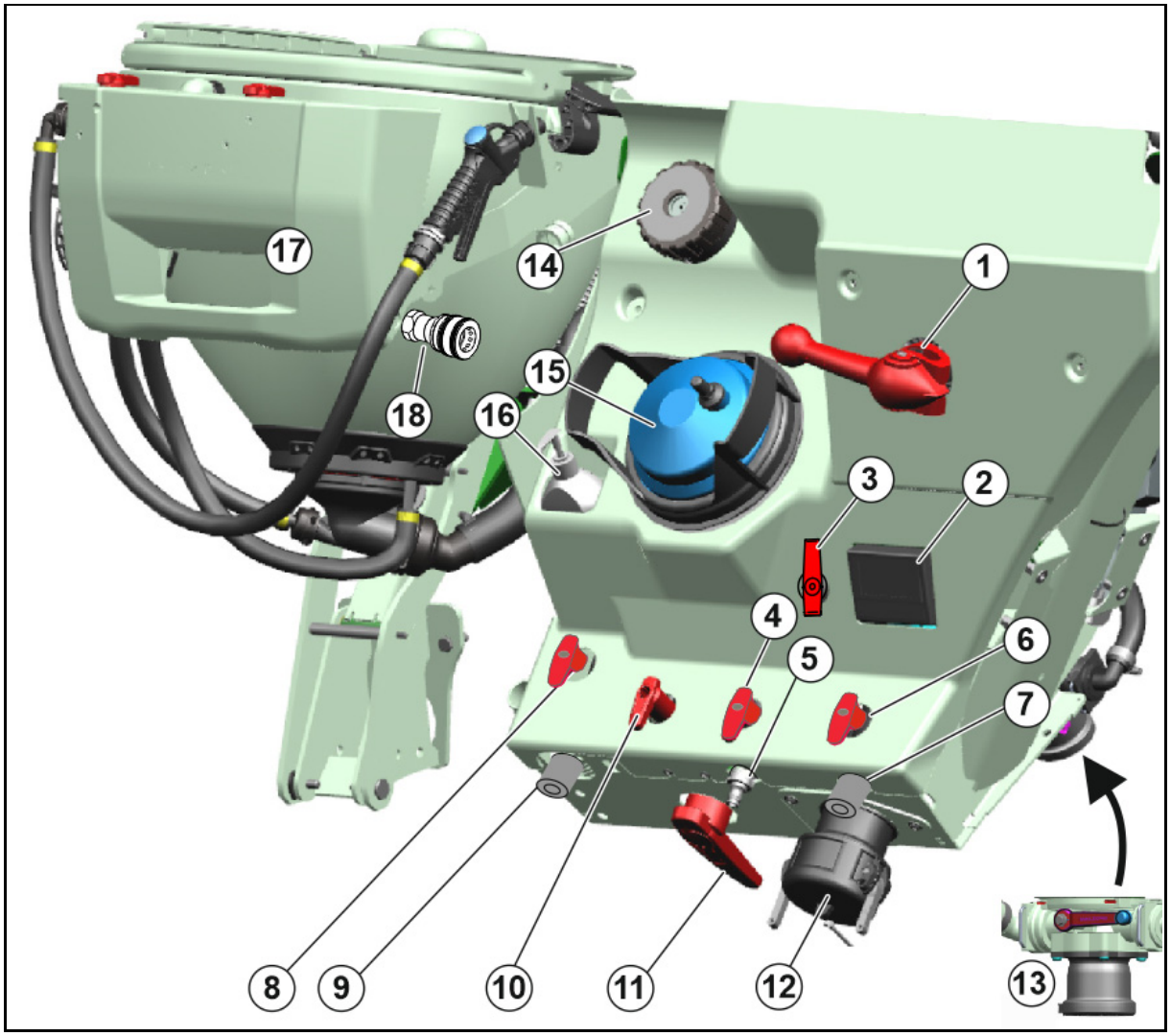

(1) Pressure valve chest (DA) switch tap

(2) TwinTerminal

(3) Switch tap source for induction bowl (QU)

(4) Switch tap for washing facility

(5) Washing nozzle for hands and small parts, and at the same time, filling connection for the washing tank

(6) Switch tap for pressure filling of the flushing water tank (FS)

(7) Filling connection (pressure) for the flushing water tank

(8) Switch tap with drip-free plug coupling (GA)

(9) Drip-free plug coupling (closed transfer system)

(10) Switch tap for draining the pressure filter (DE)

(11) Switch tap injector (IJ)

(12) Filling connection (suction) for spray liquid tank, flushing water tank

(13) Quick emptying / draining of the suction filter, draining the final residual quantities (with stop tap)

(14) Pressure filter

(15) Suction filter

(16) Soap dispenser

(17) Induction bowl

(18) Flushing connection for closed transfer system

- **TwinTerminal CP**

Switch taps on the control panel

Pressure valve chest switch tap (DA)

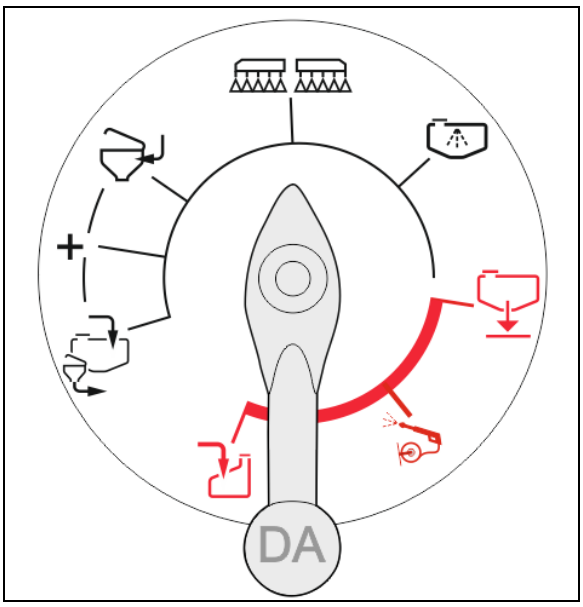

- Fill spray liquid tank via suction connection / suction from the induction bowl
- Supply induction bowl
- + (+) Switch the functions simultaneously.
- Sprayers
- Internal cleaning

Pay particular attention to the corresponding sections of the operating manual when using the functions marked in red!

- Quick emptying
- External cleaning
- Filling the flushing water tank

WARNING

Contamination of the soil due to operating errors with the pressure valve chest switch tap.

Never swivel the pressure valve chest switch tap accidentally to the quick emptying function.

The spray liquid tank is quick-emptied via the pump.

Contamination of the flushing water tank due to operating errors with the pressure valve chest switch tap.

Never swivel the pressure valve chest switch tap accidentally to the flushing water tank filling function when the pump is conveying spray liquid.

The spray liquid is pumped into the flushing water tank.

Operation of the pressure valve chest:

- Liquid circulation switched on the pressure side.
- Switch tap is locked.

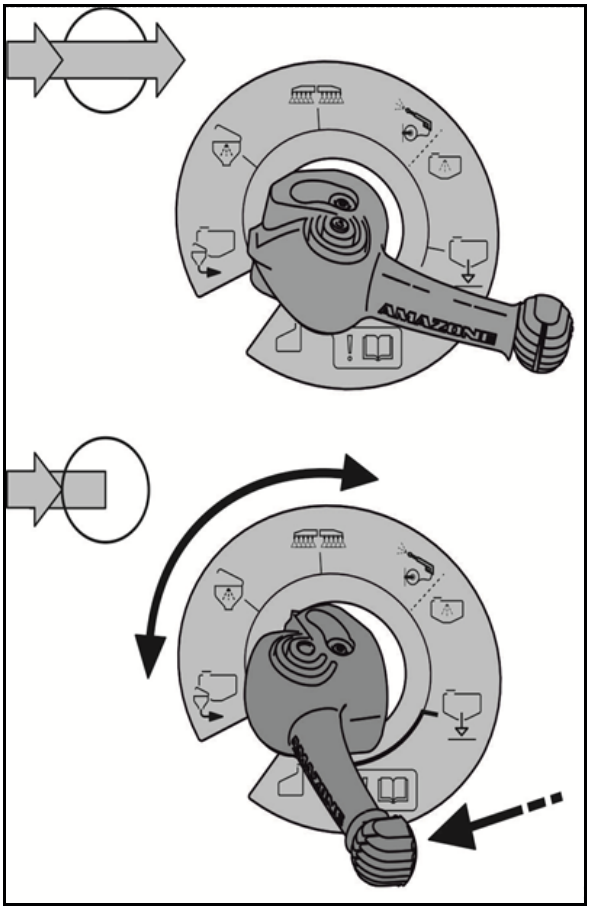

- Liquid circulation blocked on the pressure side.
- Switch tap unlocked, selection of the function is possible.

Switch tap source for induction bowl (QU)

- Use liquid from the suction valve chest for the induction bowl
- Use filling water from the pressure connection for the induction bowl

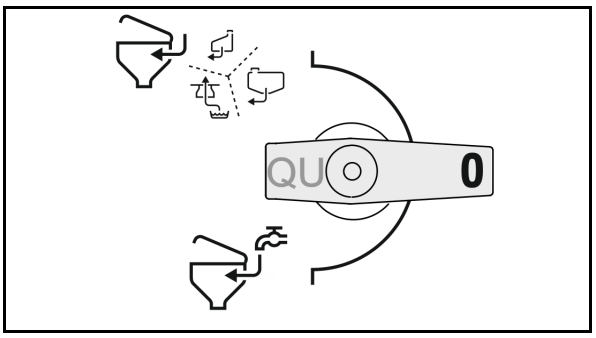

Switch tap injector (IJ)

- Suction from induction bowl
- Increase filling capacity using injector

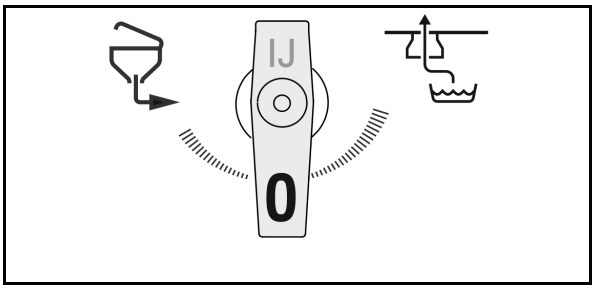

Switch tap for pressure filling of the flushing water tank (FS)

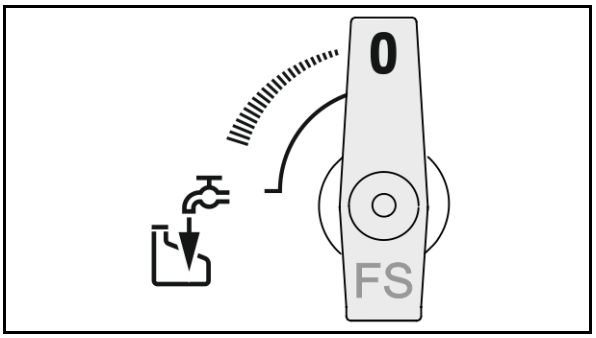

Pressure filter switch tap (DE)

- Drain pressure filter

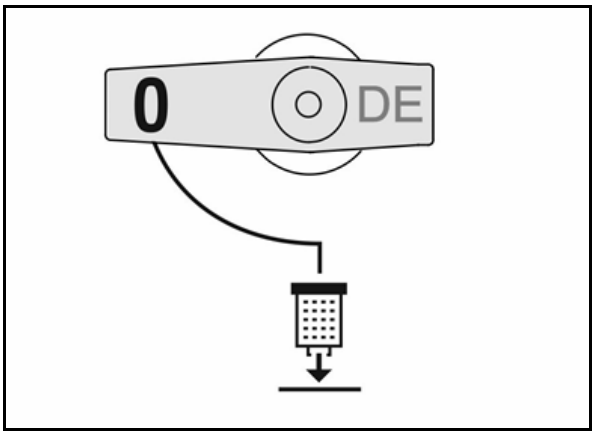

Suction from container switch tap (GA)

- 100% maximum suction capacity

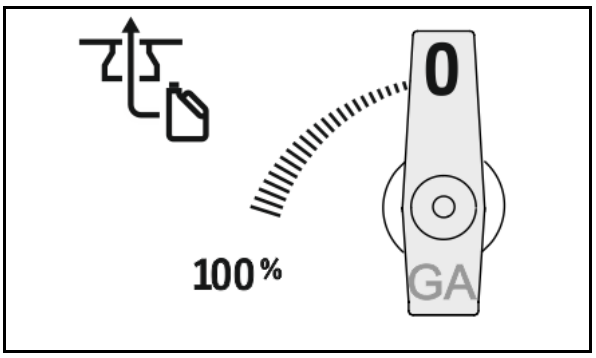

6.3 Induction bowl

(1) Swivelling induction bowl for pouring, dissolving and drawing in crop protection agents and urea.
Holding capacity of approx. 60 l

(2) Locking mechanism for folding cover

(3) Canister flushing push button

(4) The open folding cover can be used as a shelf

(5) Switch tap EA

(6) Handle to swivel the induction bowl into working or transport position

(7) Switch tap EB

(8) Spray pistol for cleaning the control panel

(9) Scale to show the contents

(10) Cleaning nozzle for canisters with pressure plate

(11) Induction bowl cleaning nozzle

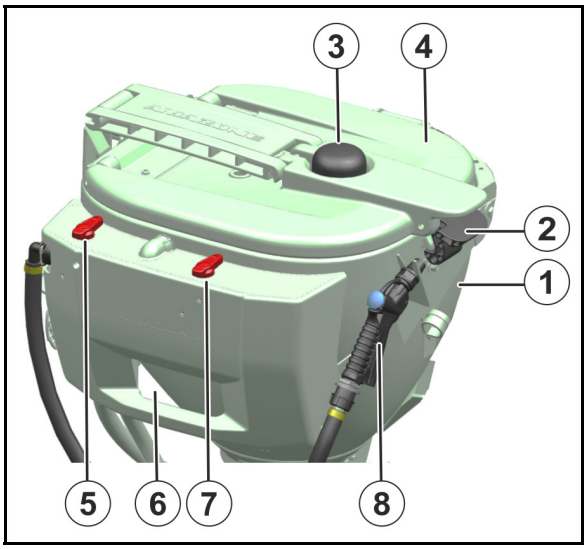

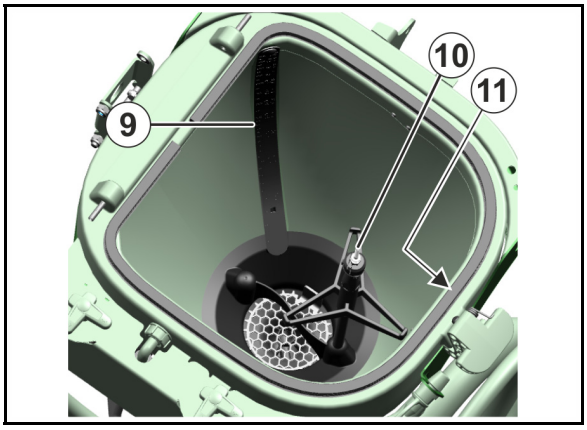

Water escapes from the canister flushing nozzle if

- the pressure plate is pressed downwards.
- the button presses the canister flushing nozzle downwards when the folding cover is closed.

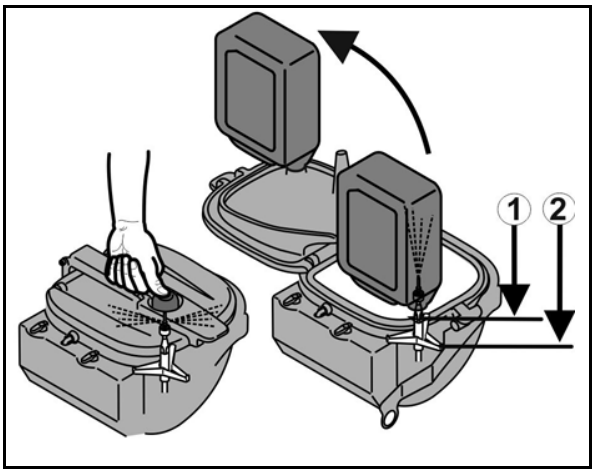

6.3.1 Switch taps on the induction bowl

- **Switch tap (EA)**
  - o External cleaning of induction bowl
  - o Dissolve agent with mixing nozzle

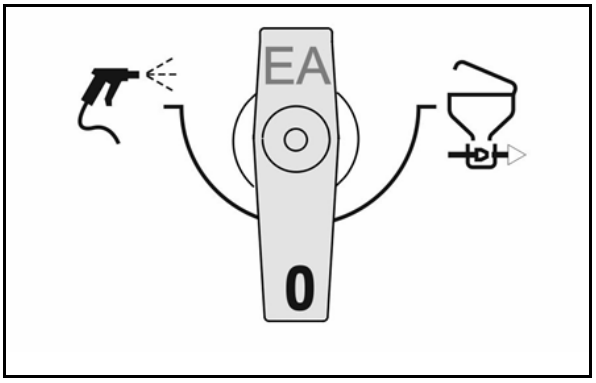

- **Switch tap (EB)**
  - o Clean canister / clean induction bowl
  - o Flushing via ring line

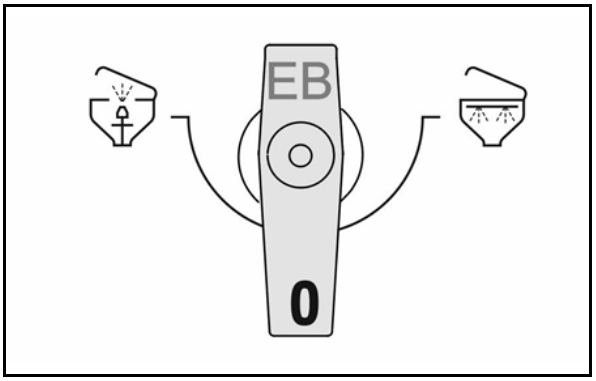

6.4 Suction hose for filling the spray liquid tank / flushing water tank

(option)

Suction hose 3“ (2 x 4 m) in parking position

- Left and right on the mudguard
- Attached on the mount with tensioning belts

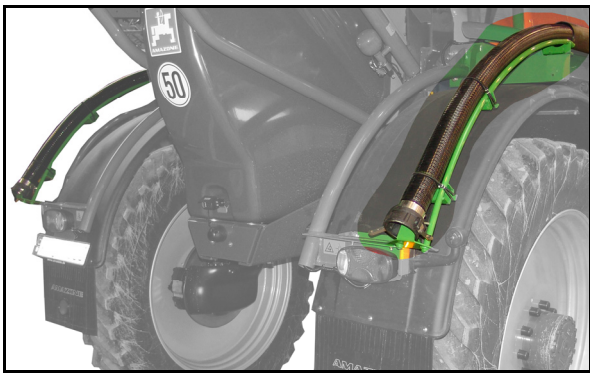

Suction filter

- With non-return valve to filter the intake water.
- With hand lever to let the residual water flow out of the hose.

Carry the suction filter in the storage compartment under the cab.

Before filling, connect the two suction hoses and the suction filter using the Camlock coupling and couple onto the suction connection.

6.5 Filling connection for pressure filling of the spray liquid tank or flushing water tank

Filling connection with automatic filling stop when the target fill level of the spray liquid tank or flushing water tank is reached.

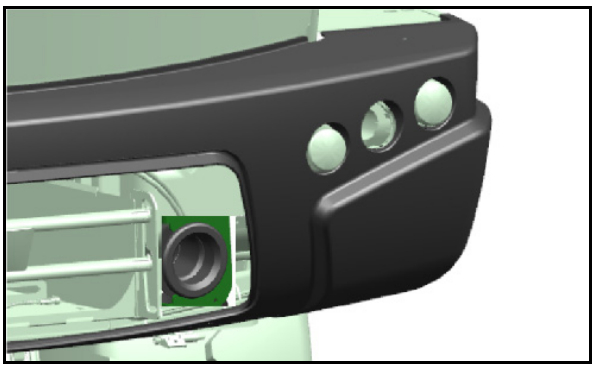

Operation takes place through the TwinTerminal.

Filling of the spray liquid tank:

- Filling with free flow path and swivel spout.
- Return flow safe direct filling.

6.6 Filter equipment

- Use all the filters provided with the filter equipment. Clean the filters regularly (refer to the "Cleaning" section, page 188). Fault-free field sprayer operation can only be achieved by correct filtering of the spray liquid. Correct filtering has a significant effect on the success of the crop protection measures.
- Pay attention to the permissible combinations of filters and mesh sizes. The mesh sizes for the self cleaning pressure filter and the nozzle filters must always be smaller than the nozzle opening of the nozzles in question.
- Ensure that the use of pressure filter inserts with 80 or 100 mesh / inch for some crop protection agents can filter out active agents. In individual cases, enquire with crop protection agent manufacturers.

Sieve against foreign objects

The sieve against foreign objects (1) prevents contamination of the spray liquid tank through the inspection hatch.

Mesh size: 1.00 mm

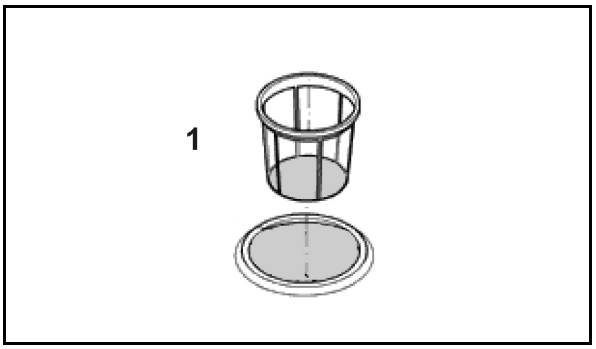

Suction filter

The suction filter filters

- the spray liquid during the spraying operation.
- the water when filling the spray liquid tank via the suction hose.

Mesh size: 0.60 mm

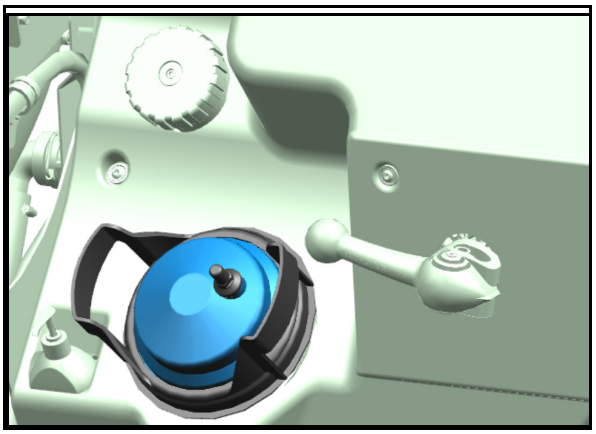

Self-cleaing pressure filter

The self cleaning pressure filter

- prevents the nozzle filter upstream of the spraying nozzle from becoming blocked.
- has a greater mesh count/inch than the suction filter.

With the additional agitator switched on, the inside surface of the pressure filter insert is constantly flushed through, and particles of spraying agent which have not dissolved as well as dirt are conveyed back into the spray liquid tank.

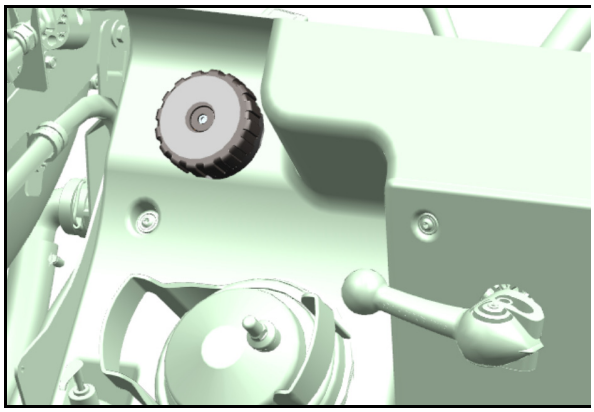

Overview of the pressure filter inserts

- 50 mesh/inch (standard), blue
  for nozzle size '03' and larger
  Filter area: 216 mm²
  Mesh size: 0.35 mm

- 80 mesh/inch, yellow
  for nozzle size '02'
  Filter area: 216 mm²
  Mesh size: 0.20 mm

- 100 mesh/inch, green
  for nozzle size '015' and smaller
  Filter area: 216 mm²
  Mesh size: 0.15 mm

Nozzle filters

The nozzle filters (1) prevent the spraying nozzle from becoming blocked.

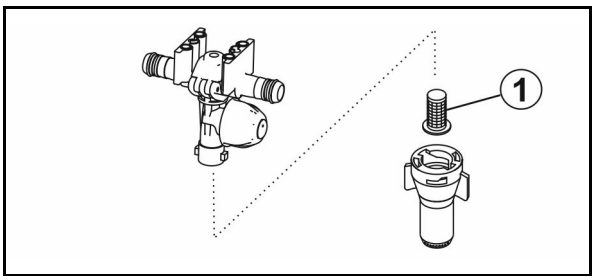

Overview of the nozzle filters

- 24 mesh/inch,
  for nozzle size '06' and larger
  Filter area: 5.00 mm²
  Mesh size: 0.50 mm

- 50 mesh/inch (standard),
  for nozzle size '02' to '05'
  Filter area: 5.07 mm²
  Mesh size: 0.35 mm

- 100 mesh/inch,
  for nozzle size '015' and smaller
  Filter area: 5.07 mm²
  Mesh size: 0.15 mm

Bottom sieve in the induction bowl

The bottom sieve (1) in the induction bowl prevents lumps and foreign bodies from being drawn in.

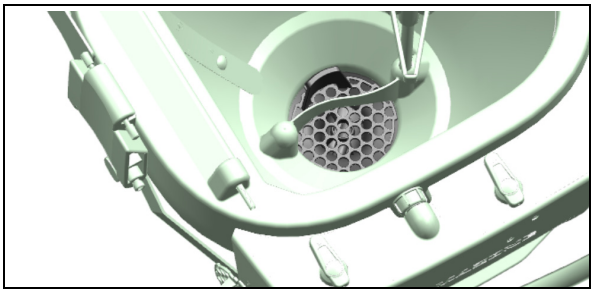

6.7 Flushing water tank

Clear water is also fed into the flushing water tank. This water is used to

- thin the residue in the spray liquid tank at the end of spraying operation.
- clean (flush) the whole field sprayer in the field.
- clean the suction chest and the spray lines when the tank is full.

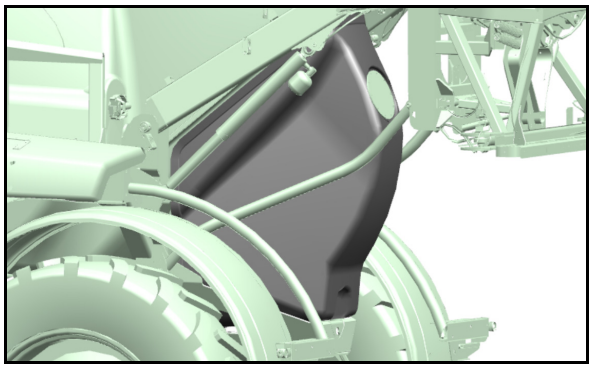

Only fill the flushing water tank with clear fresh water.

6.8 Hand washing facilities

The hand washing facilities with an 18 litre tank is used to clean hands and the spraying nozzles.

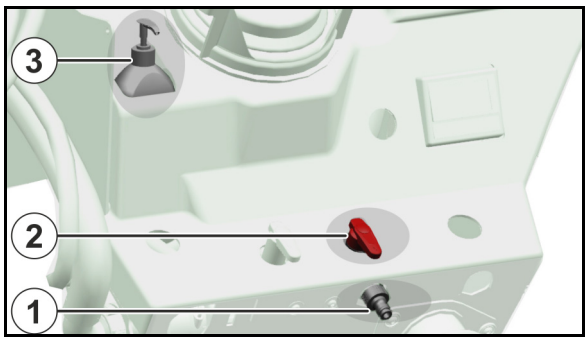

(1) Water spout and filling connection

(2) Stop tap

(3) Soap dispenser

WARNING

Risk of being poisoned by unclean water in the fresh water tank!

Never use the water from the hand wash tank as drinking water! The materials of the hand wash tank are not food safe.

6.9 Pump equipment

The pump equipment is located under the cover on the right side of the machine

(1) Flushing water pump

(2) Spraying pump and agitator pump

(3) Suction filter of the flushing water pump

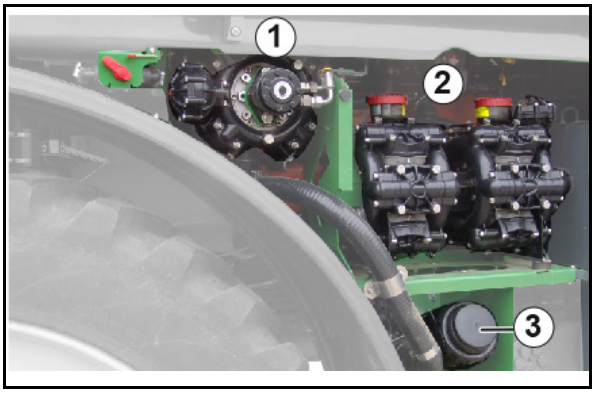

The pumps can be switched on and off automatically or manually through the TwinTerminal or ISOBUS control terminal.

The pump speed can be adjusted (operating speed 400 to 540 rpm).

6.10 Application rate increase with HighFlow

- Optional application rate increase for applying liquid fertiliser.

  The maximum application rate is increased to up to max. 400 l/min.
- In doing so, the agitator pump is used to increase the application rate. It is then only partially used as an agitator drive, or not at all.

When using HighFlow, ensure sufficient agitator capacity.

- The high-performance liquid fertilisation is switched on and off via the control terminal.

The HighFlow valve chest is located under the covers on the right side of the machine

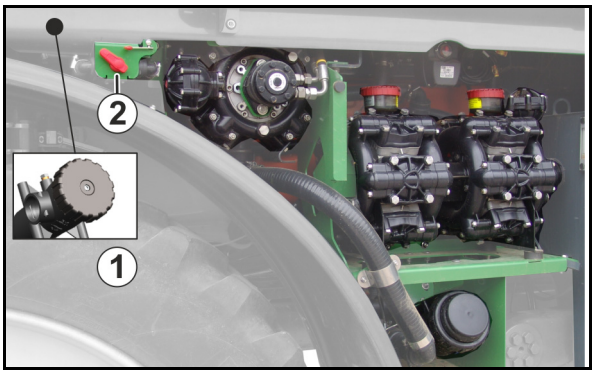

(1) Additional pressure filter

(2) Switch tap for secondary agitator / draining the residual quantity from the pressure filter

- o Agitator running at maximum
- o **0** – Agitator off
- o Drain pressure filter

Control terminal: Multi-function display

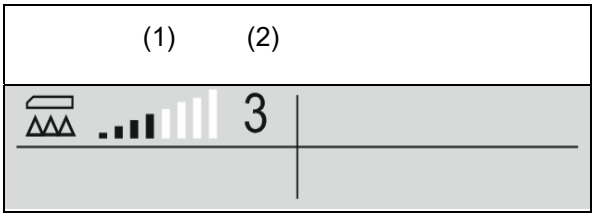

(1) The display of the rate control valve position as a bar diagram provides information as to whether the forward speed / application rate can be increased or the agitator capacity must be reduced.

→ The more bars are marked, the greater the quantity that is delivered to the boom.

(2) The digit (value 1-6) for HighFlow shows the portion that is used by the agitator pump for spraying.

6.11 Sprayer boom

WARNING

Risk of injury for people due to impact with the sprayer boom when

- **the boom sections swivel to the sides when folding**
- **tilting, lifting or lowering**

Instruct people to leave the danger area of the machine before you operate the sprayer boom.

The proper condition of the sprayer boom and how it is suspended have considerable influence on the distribution accuracy of the spray liquid. With the spraying height of the sprayer boom to the crop set correctly, a complete overlap is achieved. Nozzles are attached to the boom at intervals of 50 cm (alternatively 25 cm)

The sprayer boom is operated using the ISOBUS control terminal.

Depending on the machine equipment, the following functions can be performed via the boom kinematics function group:

- Folding and unfolding the sprayer boom,
- Hydraulic height adjustment,
- Hydraulic tilt adjustment,
- One-sided sprayer boom folding,
- One-sided, independent angling up and down of the sprayer boom / boom sections,
- Automatic boom ride.

DANGER

Always maintain an adequate distance from overhead cables when folding and unfolding the sprayer boom! Contact with overhead cables may lead to fatal injuries.

WARNING

Risk of crushing the entire body and impact due to personnel becoming trapped by laterally-swivelling machine parts.

These dangers can cause extremely serious and potentially fatal injuries.

Maintain an adequate safety distance from moving machine parts while the tractor engine is running.

Ensure that all personnel maintain an adequate safety distance from moving machine parts.

Instruct personnel to leave the swivel range of any moving machine parts before swivelling the parts.

WARNING

Danger for third parties from crushing, being drawn in and/or caught by the moving parts of the boom or impact if they stand in the swivel range of the boom while it is folding out or in.

- Instruct personnel to leave the swivel range of the boom before you fold the boom out or in.
- Release the control for folding the boom out and in immediately if someone enters the swivel range.

6.11.1 Super-L boom

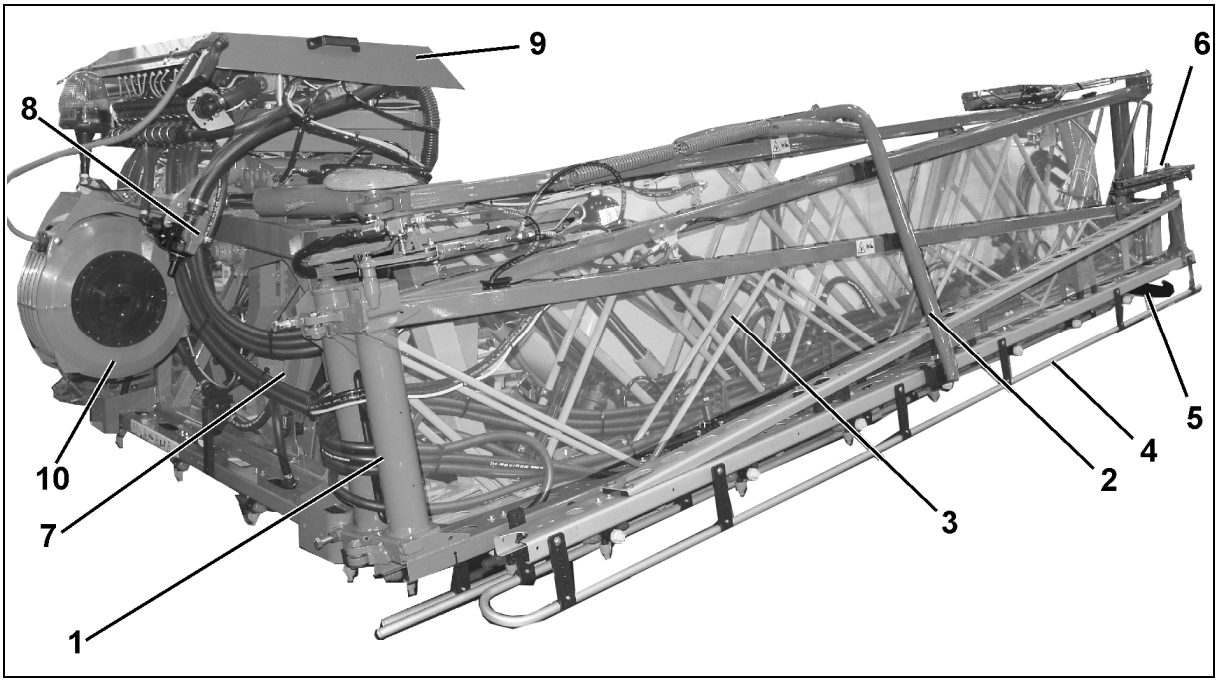

(1) Sprayer boom with spray lines

(2) Transport safety bow
The transport safety bows are used for securing the folded sprayer boom against accidental unfolding while in transport position.

(3) Parallelogram frame for adjusting the height of the sprayer boom

(4) Nozzle protection tube

(5) Spacer

(6) Outer boom locking, see **Seite** 115

(7) Swing compensation, see page oben

(8) Valve and switch tap for DUS system

(9) Boom equipment, see Fig. 96

(10) Outer rinsing unit

Locking and unlocking the transport locking mechanism

The transport safety bow is used to lock the folded sprayer boom in transport position to prevent unintentional unfolding.

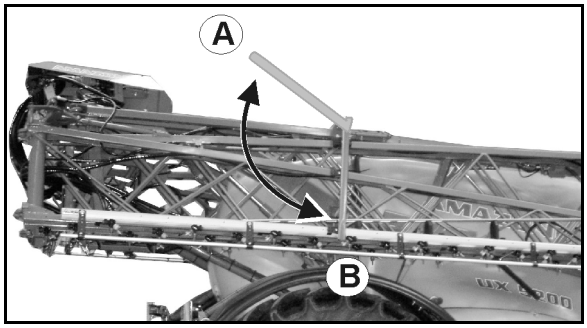

Unlocking the transport locking mechanism

Before unfolding the sprayer boom, swivel the transport safety bows upwards, thereby unlocking the sprayer boom (A).

Locking the transport locking mechanism

After folding the sprayer boom, swivel the transport safety bows downwards, thereby locking the sprayer boom (B).

Boom locking

Outer boom locking

The outer boom locking mechanisms protect the boom from damage if the outer boom sections come into contact with solid obstructions. The locking mechanism enables the outer boom section to avoid collision by moving around the articulated axle in and against the direction of travel; it is then automatically returned to its working position.

Hydraulic centre boom section locking:

Flex-folding

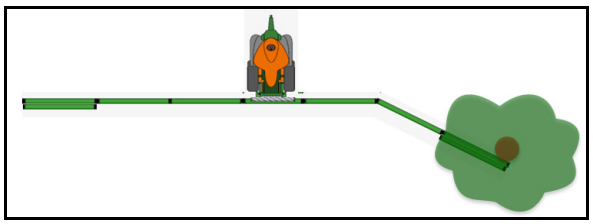

The centre boom section locking mechanisms protect the boom from damage when the centre boom section hits solid obstacles. The locking mechanism enables deflection opposite to the direction of travel when driving forward.

To return into position, the sprayer boom must be completely unfolded again.

Before moving off again, check the boom for damage.

Spacer

The spacer prevents collisions of the boom with the ground.

When using certain nozzles, the spacers are within the spray cone.

In this case, attach the spacers horizontally on the carrier.

Use thumb bolts.

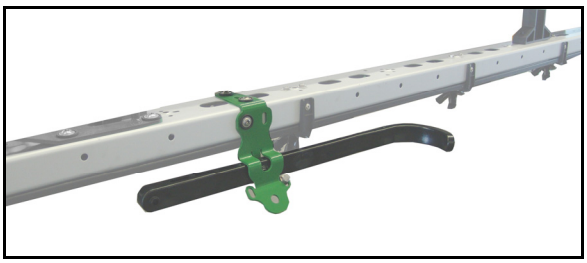

6.11.2 Sprayer boom with Flex-folding

The sprayer boom is operated using the control terminal or multi-function stick.

Folding and unfolding the sprayer boom

DANGER

Always maintain an adequate distance from overhead cables when folding the sprayer boom out and in. Contact with overhead cables may lead to fatal injuries.

Fold all of the sections simultaneously

Unfold boom:

1. Lift the boom out of the transport position.
2. Unfold the boom.

Folding the boom:

Fold the boom completely into transport position.

Do not fold and unfold the sprayer boom while driving

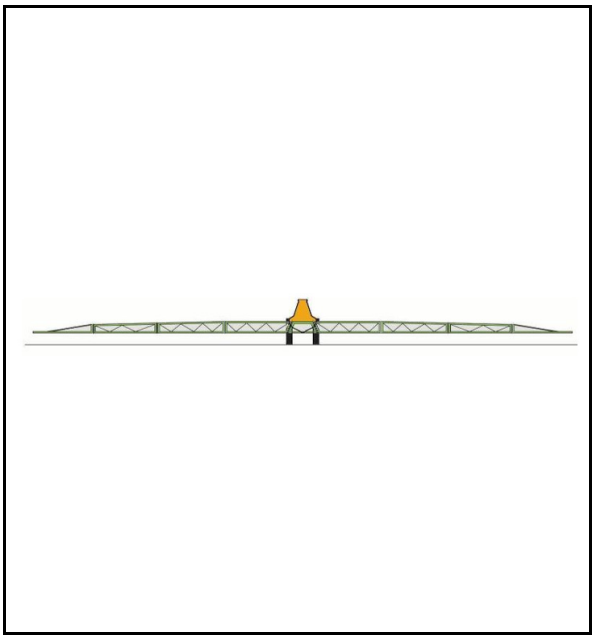

One-sided boom folding

- The outer sections can be folded while driving
- Other sections must be folded when standing still
- Fold the sections consecutively from the outside to the inside.
- Switch off the part-width sections accordingly
- Maximum forward speed 6 km/h

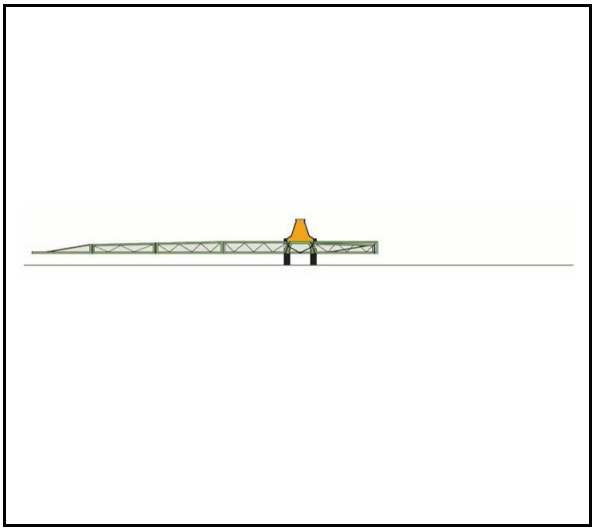

It is forbidden to work with the boom folded into transport position on one side.

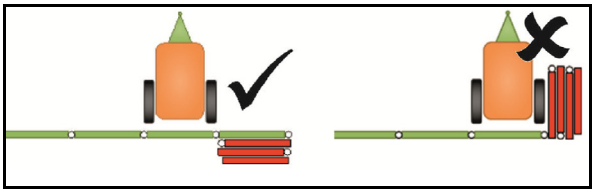

Working width reduction on both sides

Reduce the working width using part-width section control in the Profile menu.

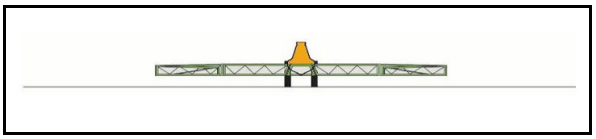

Sensors on the boom

With reduced working width, install each outer sensor rotated by 180°.

Deactivate the inner sensor (ISOBUS)

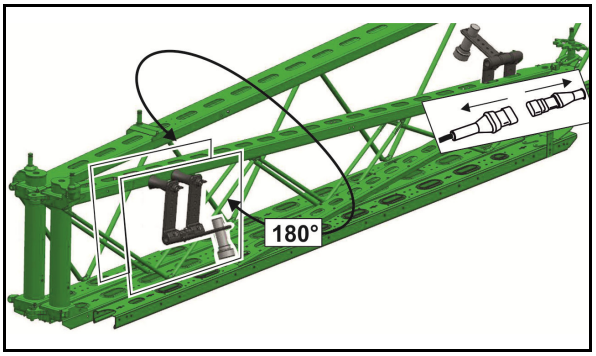

Automatic ContourControl boom ride ContourControl / DistanceControl

The automatic boom ride automatically keeps the sprayer boom parallel at the desired distance from the target surface.

Switching the automatic boom ride on / off

Set the spraying height (distance between the nozzle and the crop) according to the spray table.

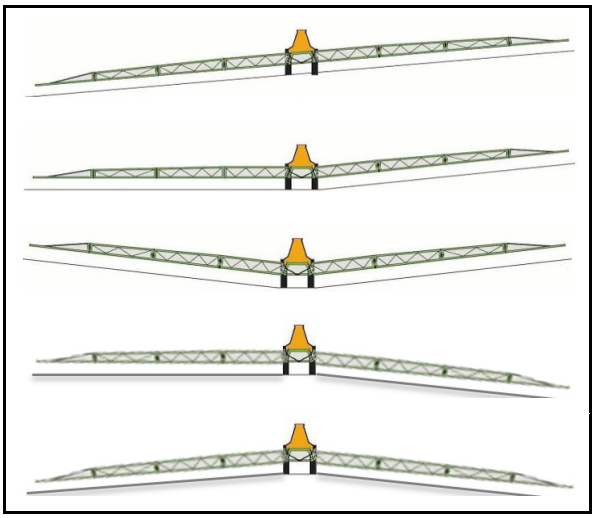

Ultrasound sensors (1) measure the distance to the ground or the crop. If there is a deviation, the system regulates the working height via the height adjustment, tilt adjustment, and angling up or down.

When switching off the sprayer boom at the headlands, the sprayer boom is automatically lifted. When switched back on again, the sprayer boom is lowered back to the calibrated height.

Setting the ultrasound sensors:

→ See figure

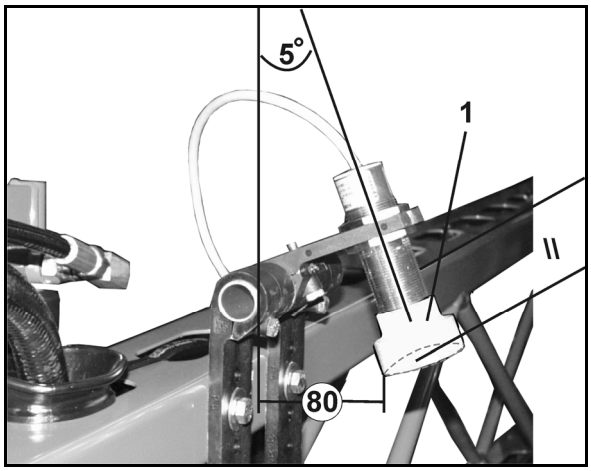

SwingStop

SwingStop option for vibration damping

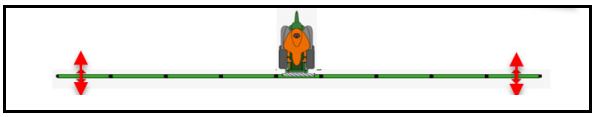

6.11.3 Reduction joint on the outer boom (optional)

Using the reduction joint, the outer element of the outer boom can be folded manually to reduce the working width.

Case 1:

Number of nozzles outer part width section	=	Number of nozzles on the foldable outer element

→ When spraying with a reduced working width, keep the outer part-width sections switched off.

Case 2:

Number of nozzles outer part width section	≠	Number of nozzles on the foldable outer element

→ Close the outer nozzles manually (triple nozzle head).

→ Perform changes on the control terminal.

- o Enter the changed working width.
- o Enter the changed number of nozzles on the outer part width sections.

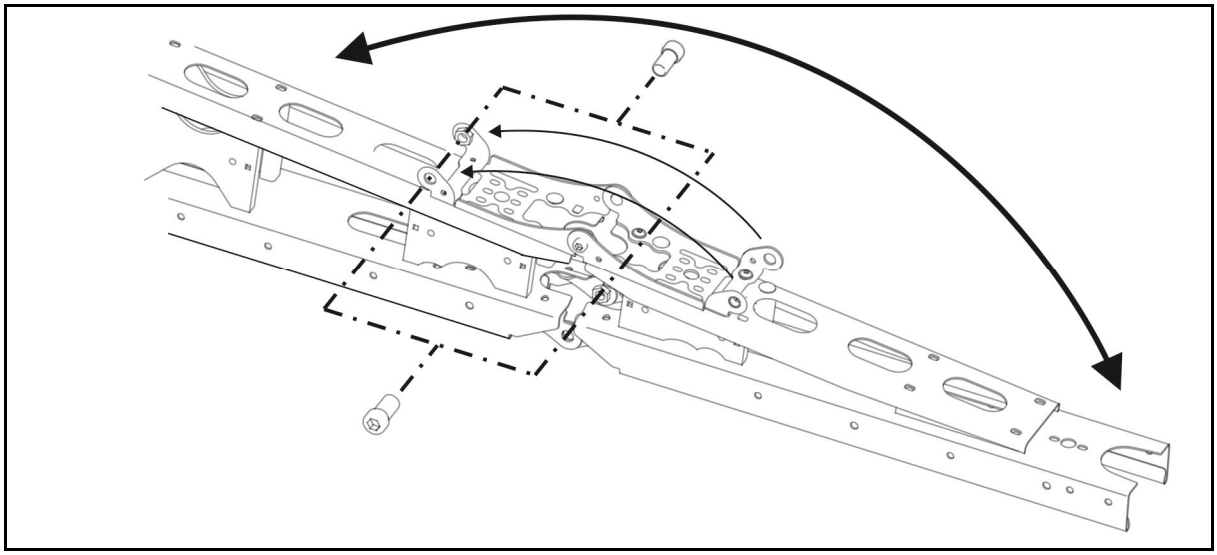

2 bolts lock the folded and unfolded outer element in its respective end positions.

CAUTION
Before road transport, unfold the outer elements again so that the transport locking mechanism is active when the boom is folded.

6.12 Spray lines

Spray lines with part-width section valves

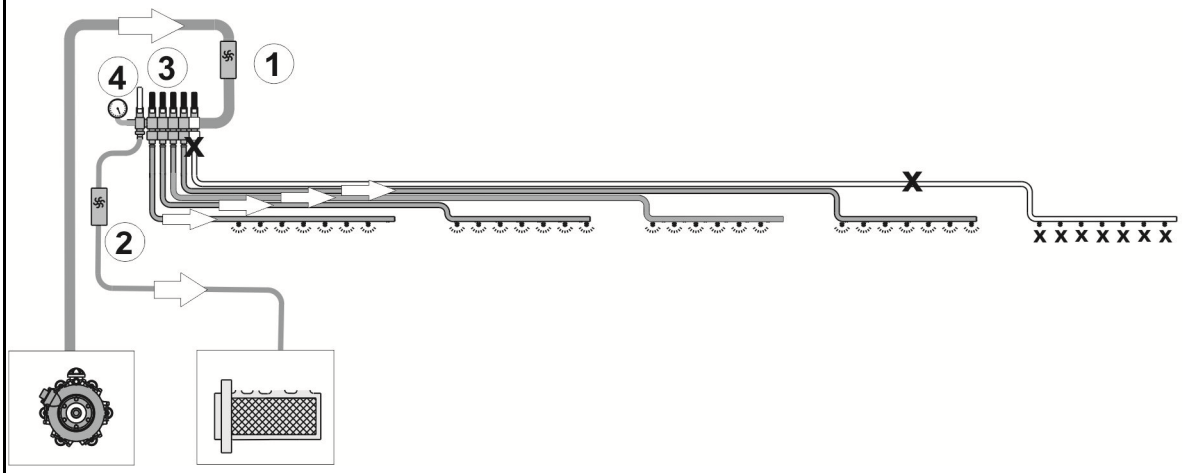

Spray lines with part-width section valves and DUS pressure circulation system

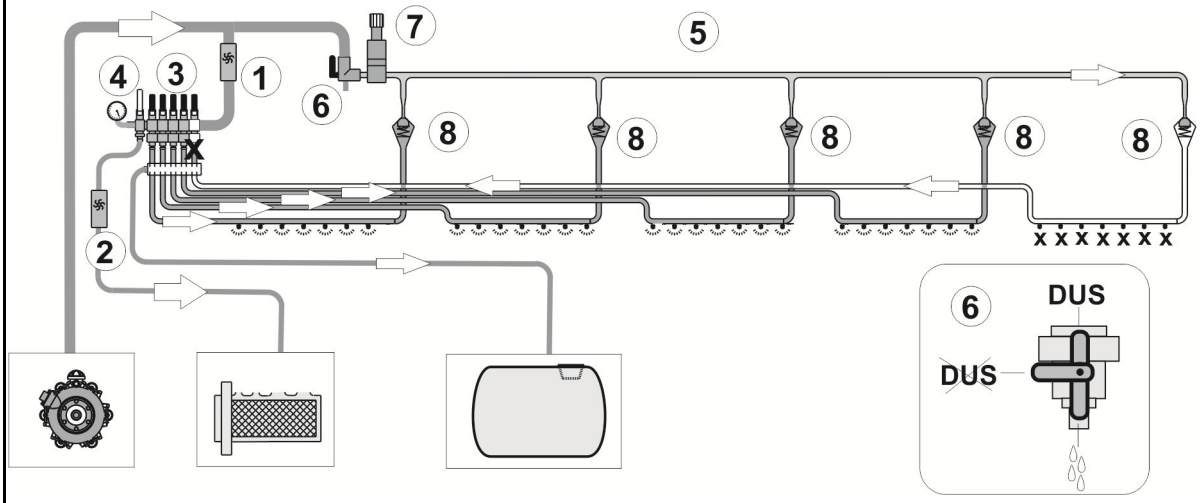

Spray lines with single nozzle control and DUS Pro pressure circulation system

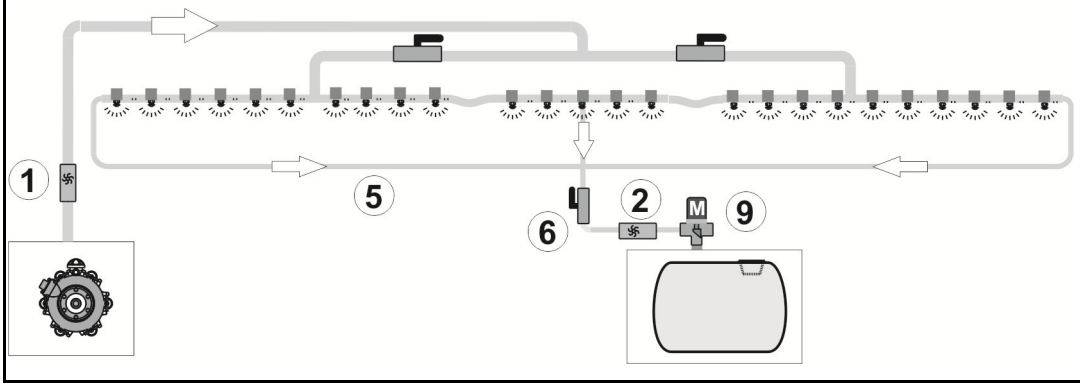

(1) Flow meter
(2) Flow meter
(3) Boom part width section valves
(4) Bypass valve for low application rates
(5) Pressure circulation line
(6) DUS stop tap
(7) Pressure control valve
(8) Check valve
(9) Pressure control valve

Pressure circulating system DUS

Part-width section valves control: When using drag hoses, the pressure circulating system should usually be switched off.

The pressure circulating system

- enables the constant circulation of liquid in the spray line. For these purposes, a suction port hose (1) is assigned to each part width section.
- enables operation using spray liquid or flushing water, as desired.
- reduces the undiluted residue for all spray lines to 2 l.

The constant circulation of liquid

- enables production of an even spray pattern right from the start, because spray liquid is available at every spraying nozzle immediately after the sprayer boom is switched on, with no delay.
- prevents damage to the spray line.

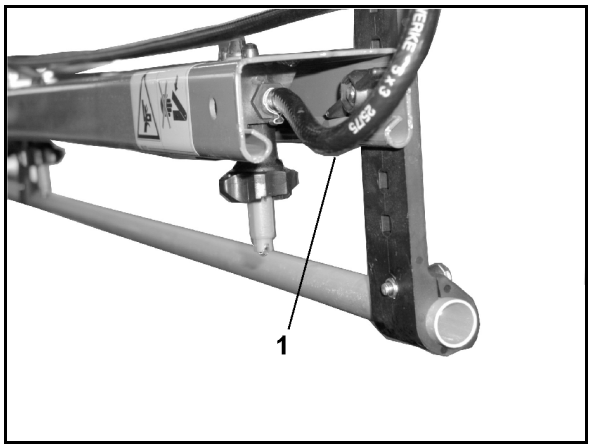

Line filter for spray lines (optional

Line filters (1) are

- fitted in the spray lines in each part width section (Teilbreitenschaltung).
- Is installed in the spray lines on the left and right (individual nozzle control)
- reduces the undiluted residue for all spray lines.

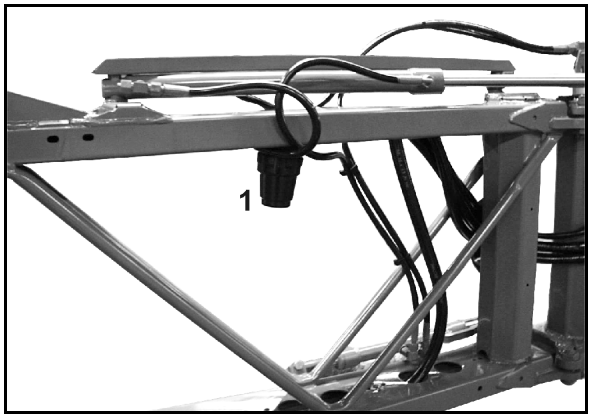

Overview of the filter inserts

- Filter insert with 50 mesh/inch (blue)
- Filter insert with 80 mesh/inch (grey)
- Filter insert with 100 mesh/inch (red)

6.13 Nozzles

(1) Nozzle body with bayonet connection

- o Spring element version with shutter
- o Spring element version, bolted

(2) Diaphragm. If the pressure in the spray line falls below approx. 0.5 bar, the spring element (3) presses the diaphragm onto the diaphragm seat (4) in the nozzle body. This ensures that when the sprayer boom is switched off, the nozzles are deactivated without subsequent dripping.

(3) Spring element.

(4) Shutter; holds the entire diaphragm valve in the nozzle body

(5) Nozzle filter; fitted as standard on machines with 50 mesh/inch, is inserted from below into the nozzle body.

(6) Rubber seal

(7) Nozzle with bayonet cap

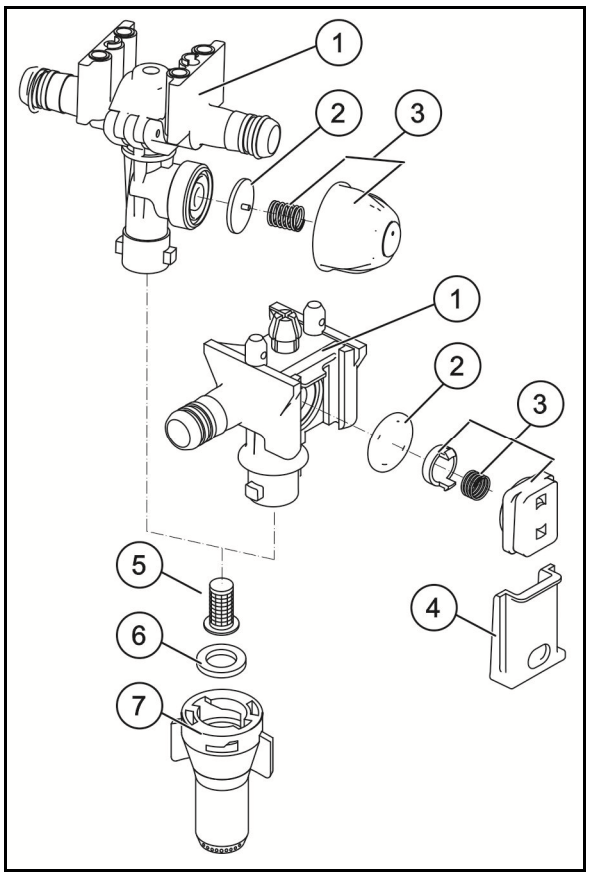

6.13.1 Multiple nozzles

It is advantageous to use multiple nozzle heads when using different nozzle types.

Turning the multiple nozzle head counterclockwise brings a different nozzle into play.

The multiple nozzle head is switched off in the intermediate positions. This provides the possibility of reducing the working width of the boom.

> Flush the spray lines before twisting the multiple nozzle head to another nozzle type.

Triple nozzles (optional)

The vertically positioned nozzle is supplied.

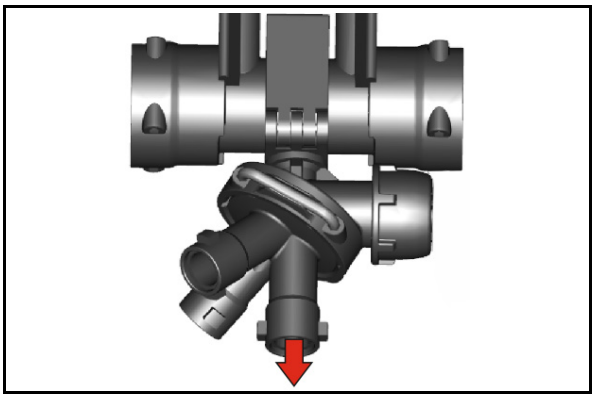

Quadruple nozzles (optional)

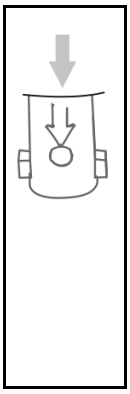

The arrow indicates the nozzles that are supplied.

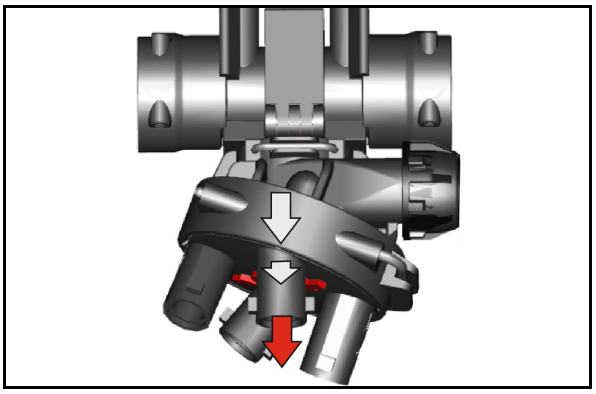

The quadruple nozzle body can be equipped with a 25-cm nozzle holder. This results in a nozzle spacing of 25 cm.

The arrow indicates the label 25 cm when the nozzle spacing is set at 25 cm.

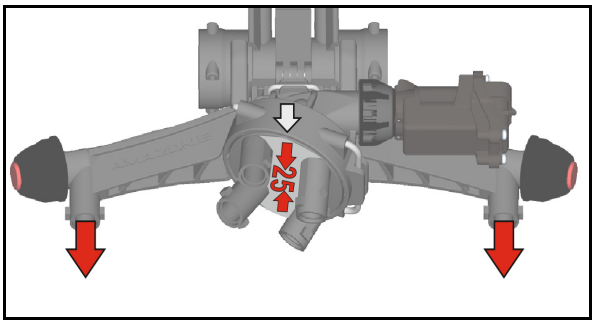

Install the 25 cm nozzle holder.

If the 25 cm nozzle holder is not used, close the supply with plugs.

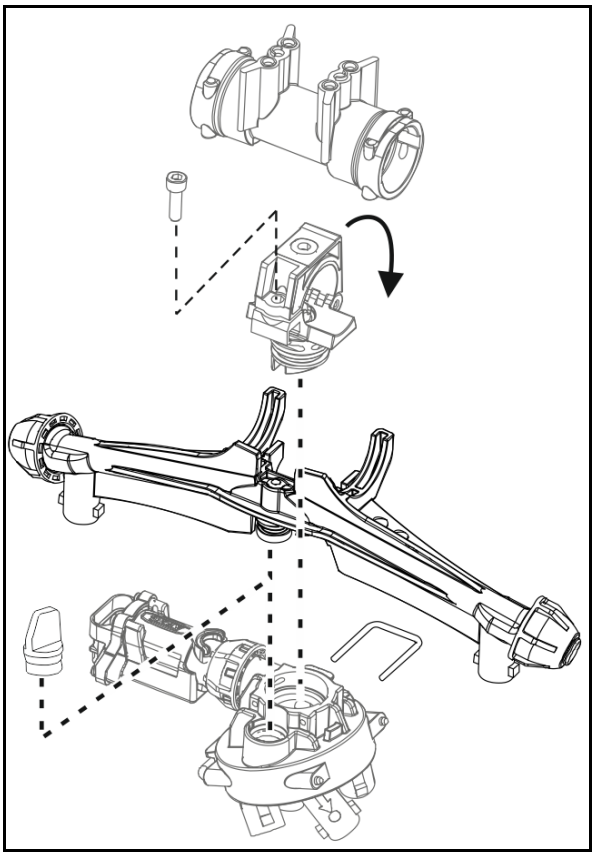

6.13.2 Edge nozzles

Boundary nozzles, electric or manual

Using boundary nozzle switching, the last nozzle can be switched off using the control terminal, and a boundary nozzle can be electrically switched on 25 cm further out (right at the edge of the field).

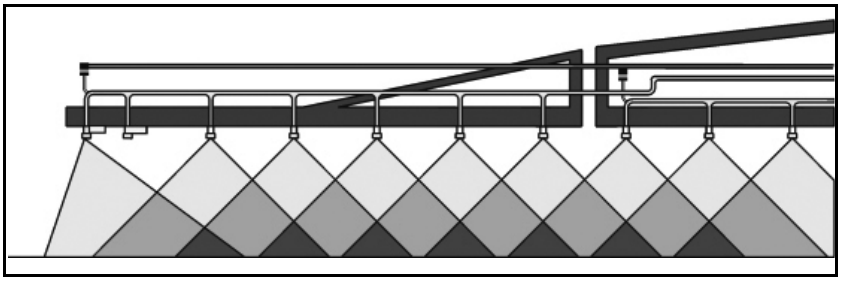

Electric end nozzle switching (optional)

Using end nozzle switching, up to three of the outer nozzles at the edge of the field close to a water source can be electrically switched off using the control terminal).

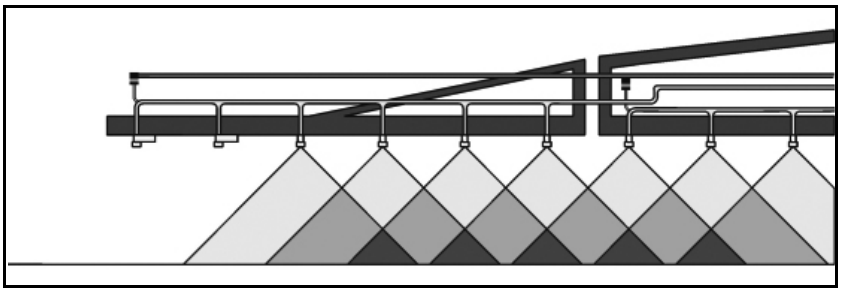

Electric additional nozzle switching (optional)

With the additional nozzle switching, another exterior nozzle is switched on using the control terminal, increasing the working width by one metre.

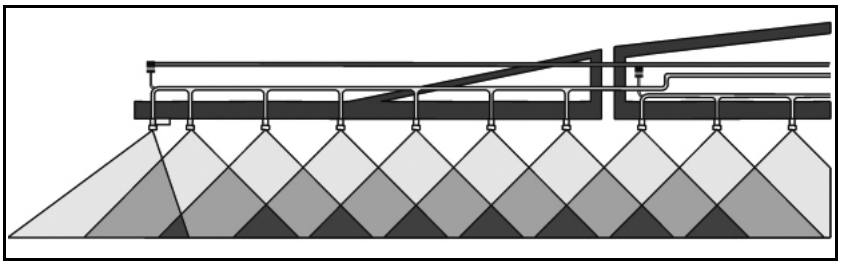

6.14 Automatic single nozzle control (optional)

50 cm part width sections can be controlled separately by the electric single nozzle control. In combination with the automatic part width section control "Section Control", overlapping can be reduced to a minimum area.

6.14.1 Single nozzle control AmaSwitch

Each nozzle can be switched on and off separately via Section Control.

(1) Nozzle body

(2) Union nut with diaphragm seal

(3) Motor valve

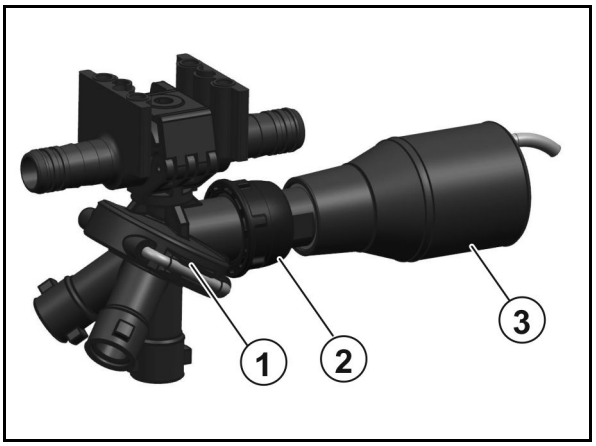

6.14.2 4-way AmaSelect single nozzle control

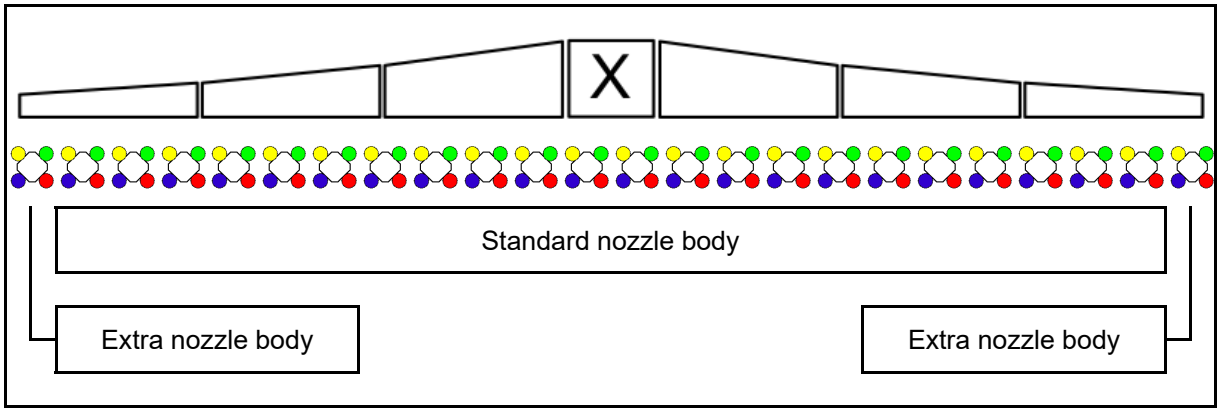

- The sprayer boom is fitted with 4-way nozzle bodies. Each of them is operated by an electric motor.
- The nozzles can be switched on or off as desired (depending on Section Control).
- Due to the 4-way nozzle bodies, several nozzles can be simultaneously active in a nozzle body.
- Alternatively, the nozzles can be manually selected.
- For boundary treatment, an extra nozzle body can be separately configured.
- LED single nozzle illumination integrated in the nozzle body.

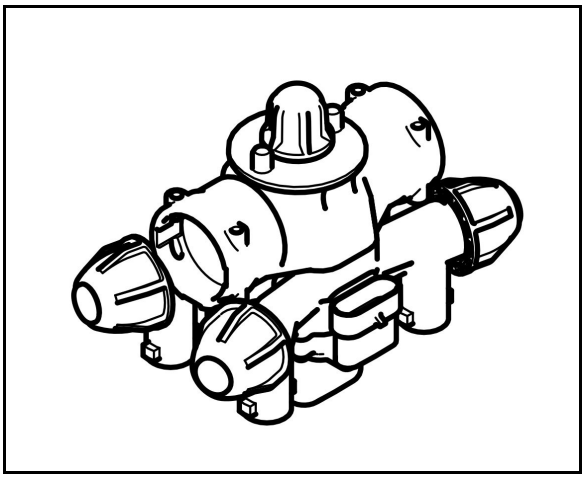

- Nozzle spacing of 25 cm is possible (optional)
  During installation, please note that the two outlets pointing to the front on the implement side must be used for installation.

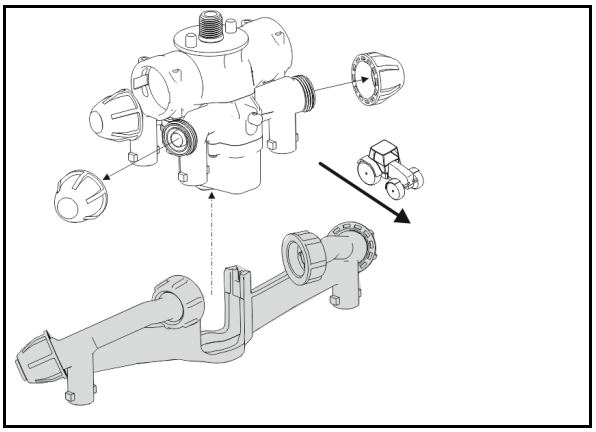

Manual nozzle selection:

The control terminal can be used to select the nozzle or the nozzle combination.

Automatic nozzle selection:

The nozzle or nozzle combination is automatically selected during spraying in accordance with the entered border conditions.

Symbol for nozzle housings - AmaSelect.

The arrow shows the direction of travel.

→ This is important for the assembly of the nozzles in the nozzle bodies!

6.15 Special optional equipment for liquid fertiliser

At the moment there are essentially two main types of liquid fertiliser available:

- Ammonium nitrate / urea solution (AUS) with 28 kg N per 100 kg AUS.
- An NP solution 10-34-0 with 10 kg N and 34 kg P_2O_5 per 100 kg NP solution.

If the liquid fertiliser is sprayed using flat-fan nozzles, multiply the corresponding values from the spray table for the spray rate (l/ha) by 0.88 for AUS and by 0.85 for NP solutions, as the spray rates listed (in l/ha) only apply for water.

As a rule:

Use coarse-dropped application for liquid fertiliser to avoid chemical burns to the plants. Overly large drops roll off the leaf and drops which are too small cause a magnifying glass effect, which burns the leaves. Too much fertiliser may cause burns to appear on the leaves due to the salt concentration in the fertiliser.

As a rule, do not spray more liquid fertiliser than, for example, 40 kg N (see also "Conversion table for spraying liquid fertiliser"). Always discontinue nozzle-based AUS fertilisation at development stage EC-39, because chemical burns on ears have a particularly bad effect.

6.15.1 Three-ray nozzles

(option)

The use of three-ray nozzles for applying liquid fertiliser is beneficial if the liquid fertiliser needs to be taken up more by the roots of the plant than through the leaves.

Thanks to its three openings, the dosing aperture, which is integrated into the nozzle, ensures a coarse-dropped, almost depressurised distribution of the liquid fertiliser. This prevents an undesirable spray mist and the formation of smaller drops. The coarse drops produced by the three-ray nozzle hit the plants with little force and roll off their surface. **Although this avoids damage from burns to the greatest extent possible, avoid the use of three-ray nozzles for late top dressing and use drag hoses.**

For all three-ray nozzles listed in the following, only use the black bayonet nut.

Different three-ray nozzles and their operational areas (at 8 km/h)

- yellow, 50 - 80 l AHL/ha
- red, 80 - 126 l AHL/ha
- blue, 115 - 180 l AHL/ha
- white, 155 - 267 l AHL/ha

6.15.2 7 hole nozzles / FD nozzles (optional)

The same conditions apply for using 7 hole nozzles / FD nozzles as for the three-ray nozzles. In contrast to the three-ray nozzle, in the case of the 7 hole nozzle / FD nozzles, the outlets are not oriented downwards, but instead point to the side. This allows very large drops to be produced on the plants using only slight impact forces.

7 hole nozzle

FD nozzle

The following 7-hole nozzles are available

- SJ7-02-CE 74 – 120l AHL (at 8 km/h)
- SJ7-03-CE 110 – 180l AUS
- SJ7-04-CE 148 – 240l AUS
- SJ7-05-CE 184 – 300l AUS
- SJ7-06-CE 222 – 411l AUS
- SJ7-08-CE 295 – 480l AUS

The following FD nozzles are available

- FD 04 150 - 240 l AHL/ha (at 8 km/h)
- FD 05 190 - 300 l AUS/ha
- FD 06 230 - 360 l AUS/ha
- FD 08 300 - 480 l AUS/ha
- FD 10 370 - 600 l AUS/ha*

6.16 Drag hose equipment for Super-L boom (optional)

- **with dosing discs for late top dressing with liquid fertiliser**

(1) Drag hoses at 25 cm intervals, after fitting the 2nd spray line.

(2) Bayonet connection with dosing discs.

(3) Metal weights - stabilise the position of the hoses during operation.

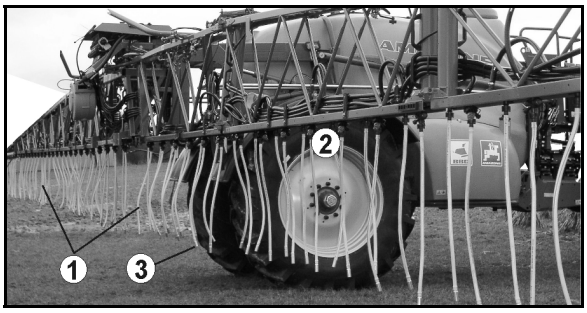

(1) Deflector hoop for the transport position.

(2) Transport position raised by lowering the transport hook

(3) Spacing runners

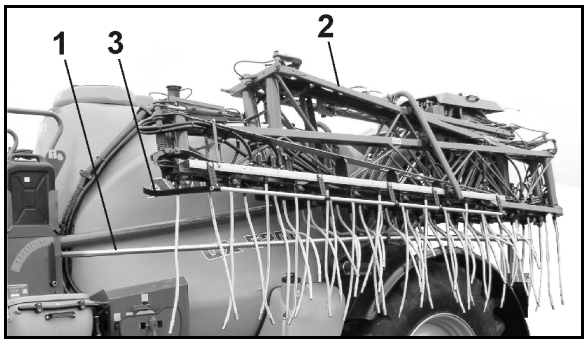

> Remove both spacing runners (Fig. 112/3) when operating drag hoses.

(1) one setting tap for every boom part width section:

- **a** Spraying via both spray lines with drag hoses
- **b** Spraying via a standard spray line
- **c** Spraying via the 2nd spray line only

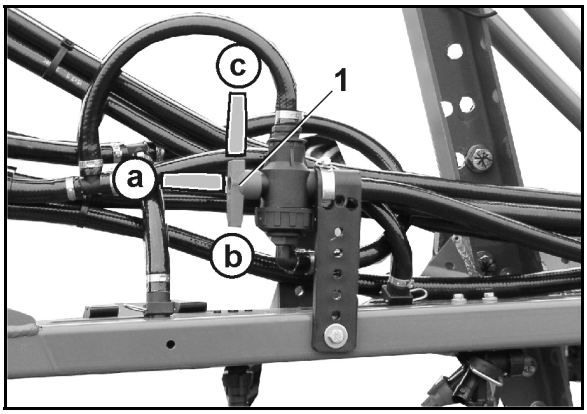

> Remove drag hoses for normal spraying operation.
>
> After removing the drag hoses, seal off the nozzle bodies with blanks

6.17 External washing unit

External washing unit for cleaning the field sprayer, includes

- Hose coiler,
- 20 m pressure hose,
- Spray gun

Operating pressure: 10 bar
Water output: 18 l/min

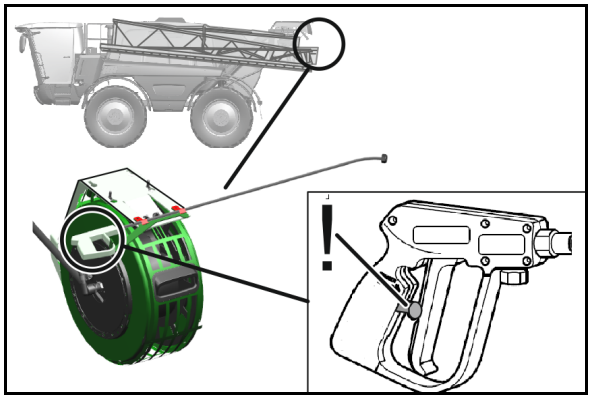

Secure the spray gun against unintentional spraying using the locking mechanism

- before each pause in spraying.
- before depositing the spray gun in its holder after cleaning work is complete.

6.18 Lift module

(option)

The lifting module allows the sprayer boom to be raised by an additional 70 cm to a nozzle height of 3.20 m.

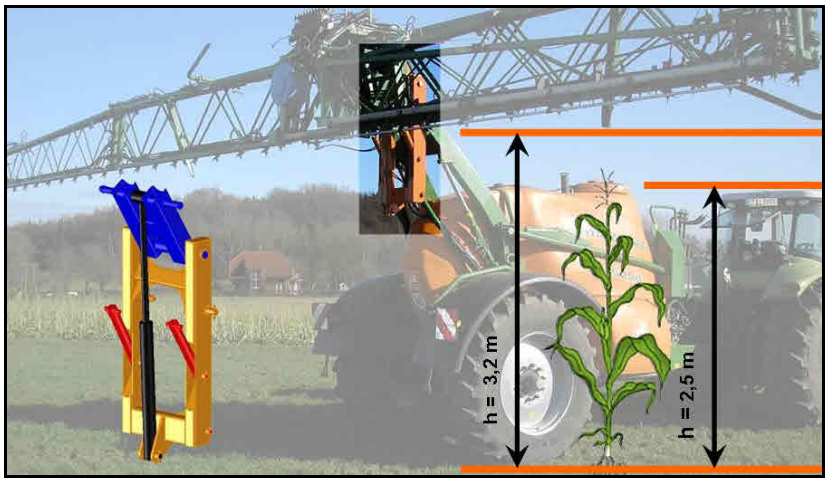

The lifting module is lifted or lowered through the control terminal.

DANGER

Risk of accidents and danger of damaging the machine.

- When driving on the roads, the sprayer boom must not be raised above the lifting module.

→ The total height of the machine with lifting module can be considerably higher than 4 m.

- Use the lifting module only when the sprayer boom is folded out.
- Lower the lifting module again before folding in the sprayer boom. The sprayer boom can otherwise not be put into the transport lock.
- Always lift or lower the lifting module to the end position!

6.19 Control terminal cover

The cover keeps the control terminal clean.

(1) Control terminal cover
(2) Lock
(3) Handle
(4) Control terminal illumination

6.20 Accessories for protecting the plants

The following accessories serve to protect the plants in tall crops:

- Wheel gear cover (1)

  Recommended if the wheel gear protrudes over the rim.
- Stalk divider (2)
- Flexible underbody cover, 80 cm wide

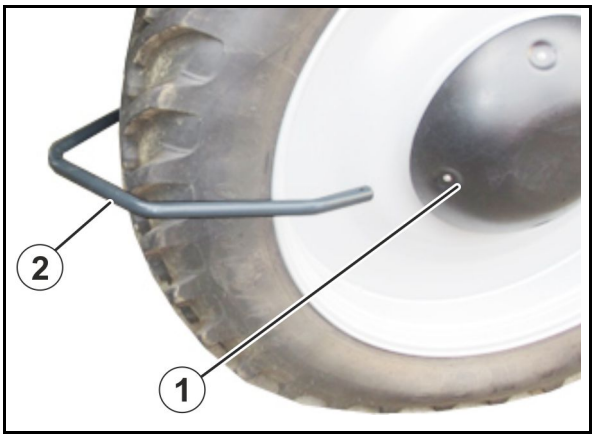

The sunflower kit is suitable for Pantera-H with tyres with a maximum width of 380 mm and maximum height of approx. 1950 mm.

(1) Wheel housing

(2) Underbody cover

(3) Stalk divider

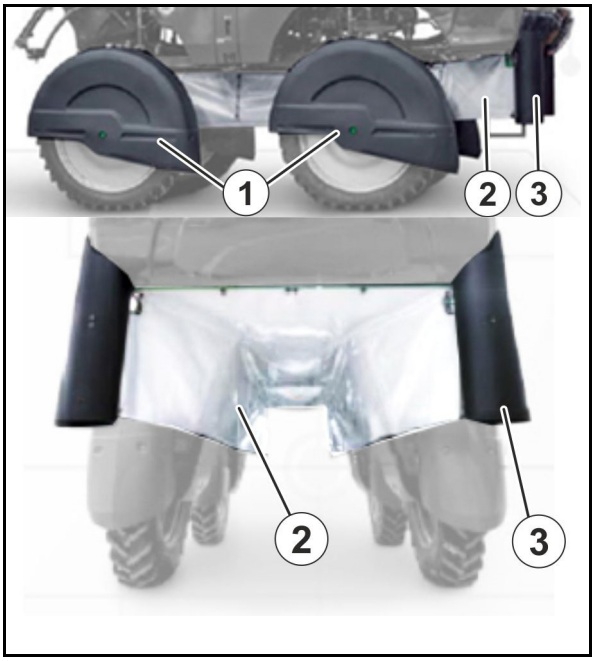

6.21 Personal protective equipment Safety Kit

The safety kit is the personal protective equipment for handling crop protection products as a handy safety kit case from AMAZONE.

7 AmaDrive vehicle terminal

7.1 Work screen

The AmaDrive is used for adjusting and monitoring almost all functions of the vehicle.

It is operated via the touch-sensitive function fields on the touchscreen terminal.

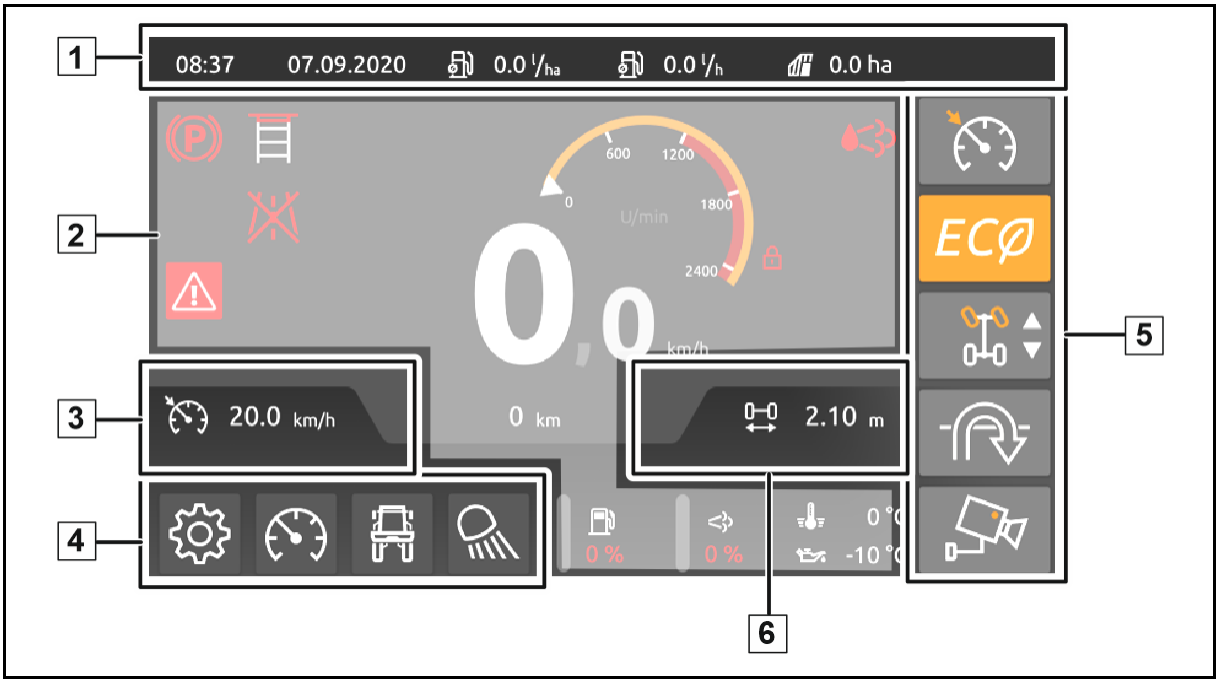

(1) Status bar

(2) Indicator lights

(3) Quick adjustment of the cruise control

(4) Submenus

(5) Buttons

(6) Quick adjustment of the wheelmark width

7.2 Indicator lights

(1) Tachometer, red area = current speed limit

(2) Forward speed

(3) Total distance driven

(4) Exhaust aftertreatment, red – fault

(1) Diesel fill level

(2) DEF fill level

(3) Cooling water temperature

(4) Hydraulic fluid temperature

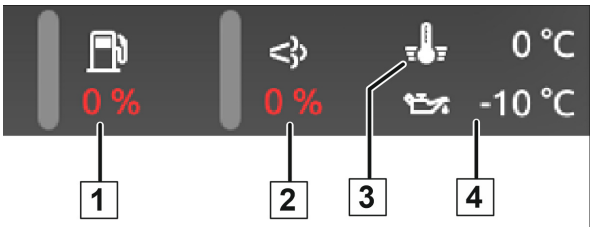

Ladder:

Ladder raised: when driving (blue), when stationary (red)

Ladder lowered: when driving (red), when stationary (blue)

While raising

While lowering

Parking brake:

Released

Auto hold activated

Machine is braked (red)

Mode:

Field

Road

Height adjustment (Pantera H only):

Running gear lowered

Running gear raised

Error messages:

None

Error messages present

7.3 Quick adjustment of the cruise control

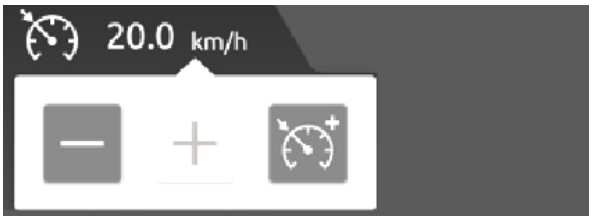

- Activate cruise control or cruise control+ 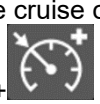
- Target speed +/-
- Cruise control on/off

1. Switch on cruise control or cruise control +.
2. Enter the target speed.
3. Move the multi-function stick forwards and the machine will accelerate to the target speed.

- The speed can be adapted to the situation at any time - the cruise control remains active.
- The cruise control cannot be activated in road mode.

7.4 Quick adjustment of the track width

Adjusting the track width

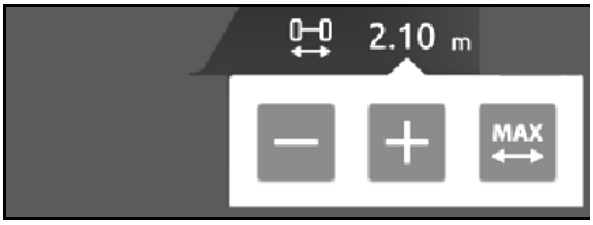

- Enter the target track width.

→ The track width adjusts itself while driving.

It is only possible to adjust the track width to a limited extent when driving across slopes, depending on the load status, the soil properties and the forward speed.

Adjust the maximum track width

The maximum track width can be set in field mode when driving for travelling over a particularly sloping terrain.

1. should be pressed when driving.

→ The maximum track width is set.

2. should be pressed again when driving.

→ The old track width is reset.

7.5 Buttons

Functions are switched on and off using the buttons.

Yellow display – Function switched on

Grey display – Function switched off

Cruise control function on/off in field mode

- Cruise control
- Cruise control+ for higher power requirements

Press and hold the field for 5 seconds to switch on and off.

ECO mode on/off

The ECO mode is active after starting the engine and switching from road to field.

Changing the steering type

Two-wheel steering system

- Two-wheel steering (used in the tramline)

Four-wheel steering system

- 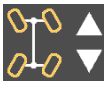 Four-wheel steering (used on the headlands)

Manual four-wheel steering system

Manual four-wheel steering is used for counter-steering of the rear axle on slopes.

1. Steer the rear wheels using the buttons on the AmaPilot driving lever.

Display:

2.

Switch off manual four-wheel steering on the headlands.

Automatic four-wheel steering system (crab steering)

Automatic four-wheel steering enables driving transverse to the vehicle axle. The front and rear wheels are steered in the same way using the steering wheel.

1. Actuate and hold for 3 seconds to activate crab steering mode.
2. / Switch crab steering on and off as required.
3. Actuate and hold for 3 seconds to deactivate crab steering mode.

Headland control on/off

Headland control switched on:

- Driving with four-wheel steering on the headlands
- Driving with two-wheel steering system in the tramline.

→ The steering type in the headland management can be overridden.

Camera on/off

The camera view appears on the display.

7.6 Submenus

Close the submenu, back to the work screen

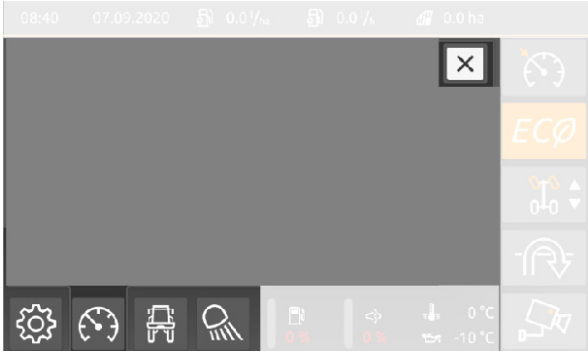

7.6.1 Drive settings

Call up the drive settings.

Adjusting the cruise control

- Cruise control on/off
- Cruise control+ on/off
- Adjust the cruise control speed

Adjusting the engine speed

(not for ECO mode)

- Adjust the engine speed
-

Direct selection of the engine speed

Assign fields for direct selection:

1. Select the engine speed using +/-.
2. To directly select any field, press it for 3 seconds.

→ Field is saved with the displayed speed.

7.6.2 Running gear settings

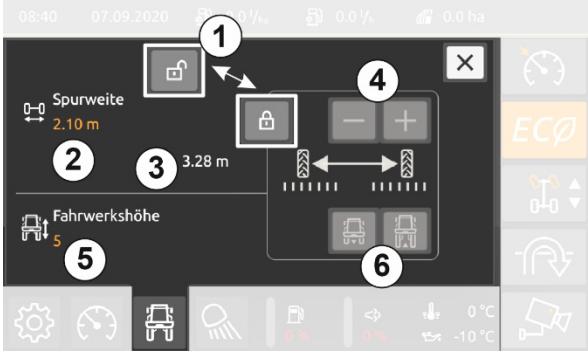

Call up the running gear settings.

(1) Running gear settings locked / unlocked

(2) Track width setpoint

(3) Actual track width

(4) Adjust the track width

(5) Actual running gear height

- o 1 – Running gear down
- o 5 – Running gear up

(6) Running gear adjustment

The setting is carried out during a short adjustment run.

1. Unlock the running gear setting

→ Increased idling speed is set.

2. Enter setpoint for track width.

3. Select the running gear height.

4. Press the driving lever forwards.

→ The machine drives forwards at 2 km/h until the desired settings are reached and then automatically stands still.

5. Pull the driving lever backwards to the neutral position.

The running gear settings are automatically locked.

The running gear height can only be set in the end positions.

The minimum track width with the running gear raised is 2.10 m.

If the adjustment procedure is interrupted by pulling back the driving lever, the running gear is lowered again when starting.

The adjustment procedure has to be restarted.

If the adjustment procedure takes longer than 120 seconds, the running gear is also automatically lowered again.

7.6.3 Work lights

Call up the work lights settings.

(1) Switch the work lights individually

(2) Switch the work lights together

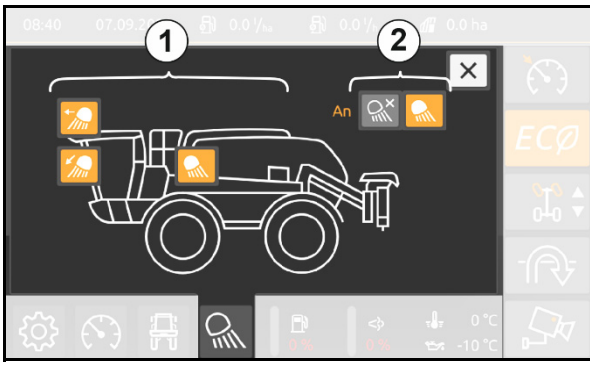

Switch the boom work lights using the ISOBUS control terminal.

The control panel illumination is switched automatically.

The work lights can only be switched on when the dipped beam is switched on.

The side-view floodlights are switched on via the control lever for the indicators when in field mode.

7.6.4 General settings

Call up the Additional settings.

The Settings menu contains the following sub-menus:

- Adjusting the terminal
- Adjusting the machine
- Diagnosis

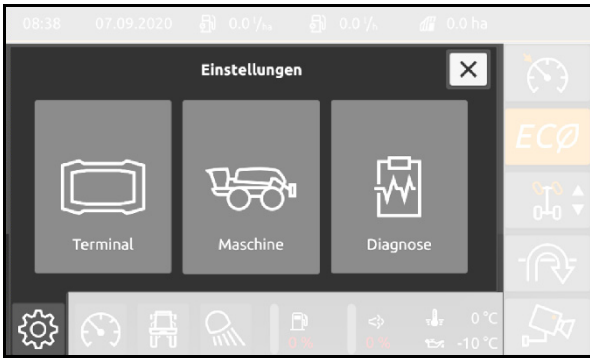

7.6.4.1 Adjusting the terminal

Find the setting.

- Set the time in the status bar
- Set the date in the status bar
- Configure the display of the status bar, see page 149
- Select day or night view
- Brightness
- Language
- Software and hardware information (only for service personnel)
- Open Source licenses (only for service personnel)

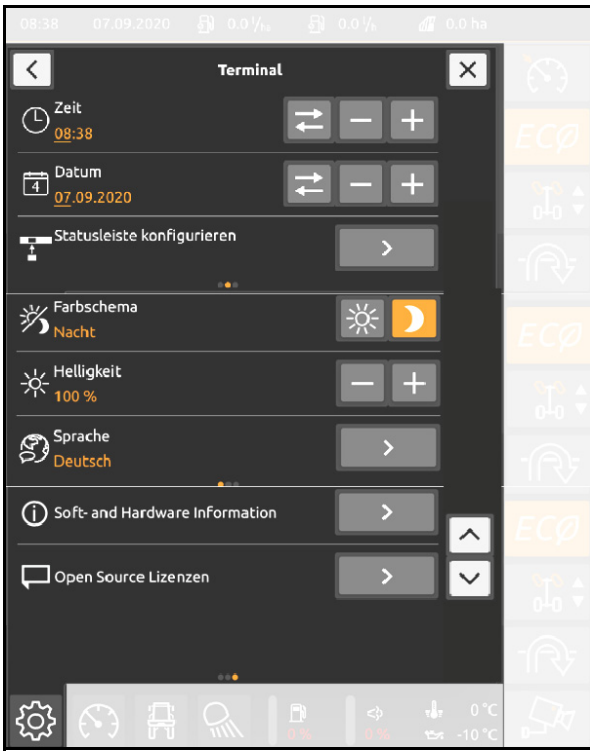

7.6.4.2 Adjusting the implement

Find the setting.

- Set the increment for track width
- Set the increment for cruise control
- Enter the tyre type
  The tyre size has to be selected correctly so that the set track width corresponds with the real track width.
- Set the interval time for the central lubrication
- Set the lubrication time for the central lubrication
- Perform single lubrication
- Correction of the forward speed
  The speed transmitted to the ISOBUS can be corrected to compensate for slippage of the wheels on the field.
- Perform regeneration of the diesel particle filter. After 500 operating hours, the regeneration must be started manually with the engine running.

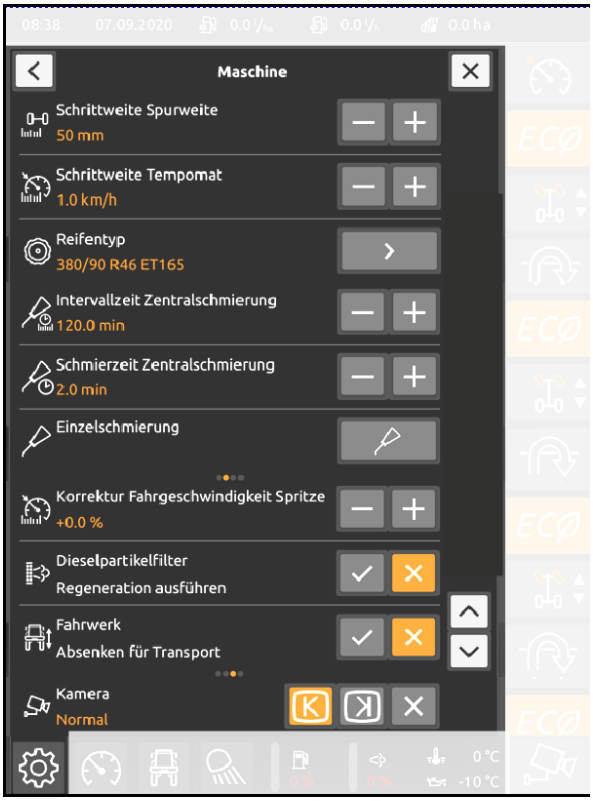

Risk of poisoning by exhaust gases.

Do not start the regeneration in buildings.

- Lower the running gear for transport (loading of the machine on a flat-bed trailer)
  - o ✓ Lower the machine before lashing
  - o X Lift the machine again after removing the lashing

When starting the lowered implement, the following message is shown: Running gear transport position selected.

→ Lift the machine before starting to drive.

- Switch the camera, normal view, mirrored, not installed

7.6.4.3 Diagnosis

Find the diagnosis data.

- Data for the exhaust system
- Sensor data
- Error memory
- Expert settings, secured
- Data for the sensors
- Data for the actuators
- Physical data

DANGER

Error memory

Find the error.

(1) Delete error memory

(2) Show all errors

(3) Show only active errors

7.7 Status line

The status line shows up to 5 freely configurable data.

Three submenus can be called up by "pulling down" the status line.

(1) Configure the status line

(2) Change the day view and night view

(3) Show operating data

7.7.1 Configuring the status line

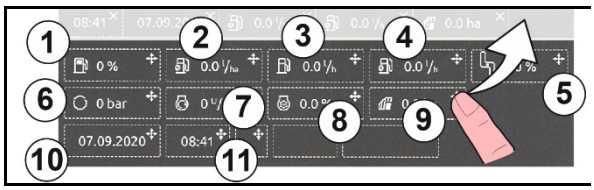

1. "Pull down" the status line.
2. Select the value for the display in the status line.
3. Pull the value window into the status line.

A maximum of 5 values are shown in the status line. If necessary, delete the value window from the status line beforehand (x).

4. Close the window by "pulling up".

Possible displays:

(1) Diesel tank fill level [%]

(2) Average consumption [l/ha]

(3) Actual consumption [l/h]

(4) Average consumption [l/h]

(5) Driving lever position [%]

(6) Drive pressure [bar]

(7) Diesel engine speed [rpm]

(8) Diesel engine load [%]

(9) Total worked area [ha]

(10) Date

(11) Time of day

7.7.2 Changing from day view to night view

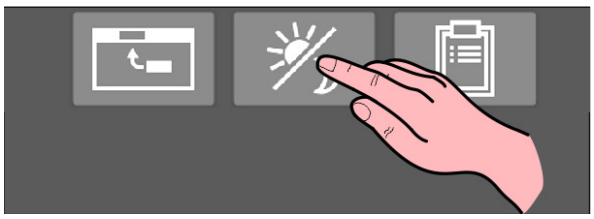

1. "Pull down" the status line.
2. Change the day view / night view.
3. Close the window by "pulling up".

7.7.3 Showing the operating data

1. "Pull down" the status line.
2. Select operating data.
3. Find the desired operating data.
4. Close the window by "pulling up".

8 TwinTerminal for Comfort Package on the control panel

The TwinTerminal can be used to perform various functions from the control panel of the implement. Among other things, the suction side multi-way valve can be electrically switched.

Standard screen of the TwinTerminal:

- Display of the spray liquid tank fill level and agitation level
- Display of the flushing water tank fill level.

4 buttons are available for operation.

When switching on the implement, per default the suction side in in position:

- Suction from the spray liquid tank

→ Spraying operation

Functions of the TwinTerminal (:

- Filling via suction connection or pressure connection
- Suction from flushing water tank (cleaning and dilution)
- Adjusting the agitator
- Circulation cleaning
- XtremeClean high-pressure cleaning

The complete XtremeClean cleaning procedure can only be started through the ISOBUS control terminal)

- Cleaning the pressure filter when the spray liquid tank is full.
- Running the pumps

TwinTerminal diagram

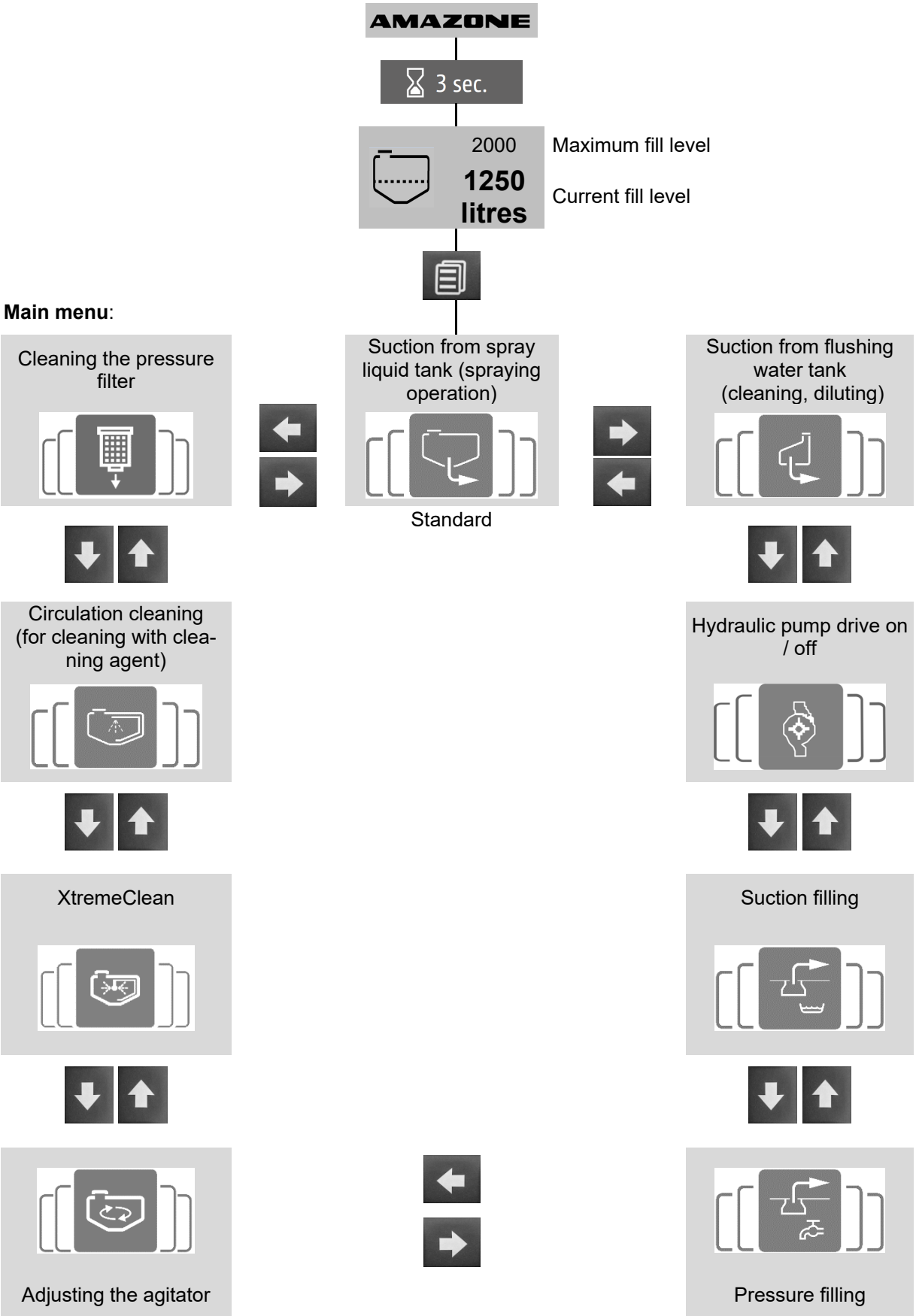

Buttons in the Main menu

, Select functions in the Main menu

Start function

Go to the start screen

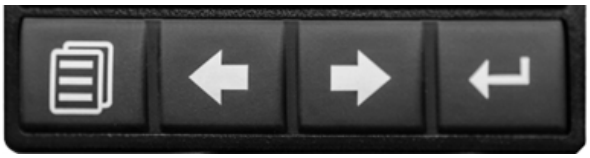

Buttons in the Setting menu

, Increase / reduce values

Confirm entry

Back

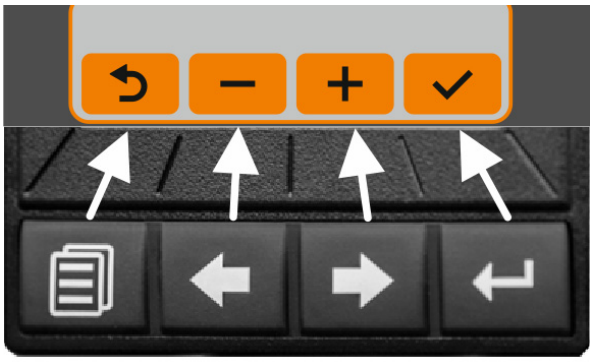

9 Start-up

- Before operating the machine for the first time the operator must have read and understood the operating manual.
- The machine must meet the national road traffic regulations.
- The operator and the user shall be responsible for compliance with the statutory road traffic regulations.

9.1 Antifreeze in the spray liquid tank

Depending on the season and marking on the implement, the implement is protected with a biodegradable antifreeze against damage due to freezing temperatures.

The antifreeze can be sprayed out with the spray liquid at first use or pumped out.

Antifreeze that was pumped out can be reused or disposed of properly.

9.2 Securing machine against accidental starting and rolling

WARNING

Risk of crushing, shearing, cutting, being caught and/or drawn in, or impact when making interventions in the machine, through

- **unintentional falling of raised, unsecured machine parts.**
- **unintentional start-up and rolling of the tractor-machine combination.**
- Secure the the machine against unintentional start-up and rolling before making any intervention in the machine.
- It is forbidden to make any intervention in the machine, such as installation, adjustment, troubleshooting, cleaning, maintenance and repairs
  - when the machine is running
  - when the ignition key is inserted in the ignition lock.
  - when the machine is not secured against unintentional rolling using their parking brakes and/or wheel chocks.

  When carrying out such work, there is a high risk of contact with unsecured components.

10 Driving on public roads

- During driving on public roads, follow the instructions given in the section "Safety instructions for the operator", page 29.
- Before moving off, check:
  - the lighting system for damage, proper operation and cleanliness,
  - the braking and hydraulic systems for obvious defects.
  - the function of the brake system

WARNING

Risk of crushing, cutting, being caught and/or drawn in, or impact from tipping and insufficient stability.

- Drive in such a way that you always have full control over the tractor with the attached machine.

  In so doing, take your personal abilities into account, as well as the road, traffic, visibility and weather conditions, the driving characteristics of the tractor and the connected machine.

WARNING

Risk of falling when riding on the machine, contrary to instructions.

It is forbidden to ride on the machine and/or climb the machine while it is running.

Instruct people to leave the loading site before approaching the machine.

WARNING

Risk of breaking during operation, insufficient stability and insufficient tractor steering and braking power from improper use of the tractor.

Comply with the maximum load of the connected machine. If necessary, drive only with a partially filled tank.

DANGER

Risk of accident from excess machine width!

The permissible overall width of the machine may not be exceeded when travelling on the roads.

If required, reduce the track width in order to maintain the permissible overall width of 2550 mm.

The wings form the outermost edge of the machine.

The wheels may not stick out any further than them.

DANGER

Risk of accident from excess machine width!

- Pantera-W:

  The total width of the machine is 2750 mm.

- Machines with wide mudguards (700 mm):

  The total width of the machine is 2865 mm.

Please observe the country-specific specifications for the permissible total width of the machine.

10.1 Requirements for driving on public roads

DANGER

Risk of accident if the following measures are not carried out.

- Select road mode.

→ Two-wheel steering system is activated..

→ No cruise control function.

- With three-piece booms, check that the additional rear lights and the additional red reflector are ready for operation.
- Move the sprayer boom to the transport position and secure mechanically.

→ If a working width reduction of the outer elements is mounted, unfold it for transporting purposes

- The cabin ladder must be folded up.
- Pantera H: lower the machine again for travelling on the road.
- When filling the spray liquid tank, note the permissible total weight or the permissible wheel and axle loads.
- The induction bowl must be pivoted up to the transport position and secured mechanically.
- The ladder on the fuel tank must be pivoted up to the transport position and secured mechanically.
- If a boom extension (option) is mounted, move it into the transport position.
- Switch the work lights off during transport to avoid blinding other motorists.
- Lower the lifting module (option) when transporting so that the maximum transport height of 4 m is maintained.

11 Driving with the Pantera

WARNING

Risk of accident due to incorrectly operating brake system and drive system.

Make sure that the control terminal is switched on during all journeys.

11.1 Entering and exiting the cab

WARNING

Risk of injuries from falling from the cabin.

- When leaving the cabin, make sure that the ladder has been lowered completely.

  You cannot see if the ladder has been lowered from inside the cabin.
- Climb up and down the ladder facing the machine (3 point rule).

11.2 Starting the engine

1. Switch on the power supply using the main switch.
2. Check the neutral position of the driving lever.
3. Turn the ignition key to the start position. When the engine starts and runs, let go of the key.

→ After standing for a long while, the **AmaDrive** needs 90 seconds until the display appears on the screen.

You are however, already able to start driving.

4. Allow the engine to run warm before you start to drive, do not start with full speed.

The diesel engine does not have a pre-glowing function.

CAUTION

It is not possible to start the engine by jump starting (towing). Damage will be caused to the drive when attempting this!

Always use an auxiliary battery when the battery of the machine is empty.

11.3 Driving with the machine

DANGER

Risk of accidents when driving on the road in field mode.

When driving on the road, select the road mode.

DANGER

Risk of an accident due to overtiredness and lack of concentration.

Make sure enough breaks are taken. Reduced times at the steering wheel are necessary due to the influence of noise and vibrations.

When driving on slopes, switch on the AutoHold function to prevent rolling back when moving off.

1. Start the engine.

After starting the engine:

2. Release the parking brake.
3. Push rocker switch in position **+** and keep pressed.

→ The ladder pivots to the transport position.

→ Observe the **AmaDrive** display.

4. Push rocker switch downwards.

→ Select road mode for driving on roads and field mode for driving on fields.

5. Adjust the track width.

→ When driving on public roads, the wheels are not allowed to protrude over the outer dimensions of the machine.

6. When driving on slopes, switch on the AutoHold function.
7. Start to drive using the drive actuator
8. For braking, use the drive actuator or, where necessary, the brake pedal at the same time.

CAUTION

Perform a track correction on a daily basis!

Otherwise there is a risk of causing an accident due to the track being set incorrectly, see page 67.

11.3.1 Road travelling / field travelling

Road mode: Push rocker switch downwards.

AmaDrive display:

- Only two-wheel steering possible.
- No cruise control function.
- Warning when driving with ladder lowered.
- Warning: Track width set according to the type approval.

Field mode: Unlock rocker switch and push upwards.

AmaDrive display:

- Speed limited to 20 km/h.
- Warning when driving with ladder lowered.

11.4 Stopping the engine

Park the implement on a level parking surface with solid ground.

1. Depending on the previous loading, allow the engine to run idle for a few minutes.
2. Move the driving lever to neutral.
3. Actuate the hand brake via the switch.
4. Push rocker switch in position **-** and keep pressed.

→ The ladder pivots to the park position.

→ Observe the **AMADRIVE** display.

5. Turn the ignition key back and pull it out of the lock.

→ The motor is stopped.

The power supply will be automatically switched off after 2 hours.

Cooling-down when the engine is running is especially important for the turbocharger bearing. The turbocharger is cooled with oil as long as the engine is running.

Stopping the engine immediately after work may lead to very high temperatures in the turbocharger. This will reduce the operating life of the turbocharger considerably.

12 Using the field sprayer

When using the machine, observe the information in the following sections:

- "Warning symbols and other labels on the machine" starting on page 18 and
- "Safety information for the user", starting on page 28 ff.

Observing this information is important for your safety.

WARNING

Risk of contusions, drawing in and catching during machine operation without the intended protective equipment!

Only ever start up the machine when the protective equipment is fully installed.

Take along spare nozzles and spare nozzle filters.

Observe the separate operating manual for the control terminal and the implement control software.

Pay attention to the increased risk of tipping over if the track width is narrow.

WARNING

DistanceControl, ContourControl

Risk of injury due to accidental movement of the sprayer boom in automatic mode when entering the radiation area of the ultra-sound sensor.

Lock the sprayer boom

- Before leaving the tractor.
- If unauthorised persons are standing in the area of the sprayer boom.

12.1 Preparing the spray liquid

Prepare the spray liquid with the TwinTerminal on the control panel.

WARNING

Risk of accidental contact with crop protection agent and/or spray liquid.

- Always induct the crop protection agent into the spray liquid tank using the induction bowl.
- Swivel the induction bowl into the filling position before pouring in crop protection agent.
- Observe the safety regulations on personal protective equipment in the instructions for use of the crop protection agent when handling crop protection agents and preparing the spray liquid.
- Do not prepare the spray liquid in the vicinity of wells or surface water.
- Avoid leaks and contamination with crop protection agent and/or spray liquid through appropriate conduct and wearing appropriate physical protection equipment.
- To avert risks to third parties, do not leave the prepared spray liquid, unused crop protection agent or used crop protection agent canisters and the uncleaned field sprayer unattended.
- Protect contaminated crop protection agent canisters and the contaminated field sprayer from precipitation.
- During and after preparing the spray liquid, ensure sufficient cleanliness in order that risks may be kept as low as possible (e.g. thoroughly wash used gloves before removing them and dispose of the washing water and cleaning fluid in the proper manner).

- The prescribed water and agent spray rate can be found in the directions for use of the crop protection agent.
- Please read intently the directions for use of the agent and observe the specified precautions!

WARNING

Danger for persons / animals due to accidental contact with spray liquid when filling the spray liquid tank!

- Wear personal protective equipment when working with crop protection agents / releasing spray liquid from the spray liquid tank. The required personal protective equipment depends on the information provided by the manufacturer, the product information, the instructions for use, the safety data sheet or the instruction manual for the crop protection agent to be used.
- Never leave the field sprayer unattended when filling it.
  - Never fill the spray liquid tank above the nominal volume.
  - Never exceed the permissible payload for the field sprayer when filling the spray liquid tank. Always pay attention to the respective specific weight of the liquid to be filled.
  - When filling, continuously watch the fill level indicator to prevent overfilling the spray liquid tank.
  - When filling the spray liquid tank on a sealed surface, make sure that no spray liquid gets into the waste water system.
- Before filling, check the field sprayer for damage, such as leaky containers and hoses and make sure all the control elements are in the correct position.

While filling, pay attention to the permissible load capacity of your field sprayer. Always take the differing specific weights [kg/l] for the individual liquids into account while filling your field sprayer.

Specific weights of different liquids

Liquid	Water	Urea	AUS	NP solution
Density [kg/l]	**1**	**1.11**	**1.28**	**1.38**

TwinTerminal:

Operations on the control panel are performed through the TwinTerminal.

ISOBUS control terminal:

Operations on the field are performed through the control terminal in the tractor.

- As it is difficult to dispose of residues in an environmentally-friendly manner, carefully calculate the required filling quantity or refill quantity to avoid leaving any residue at the end of the spraying operation.
  - To calculate the required refill quantity for final filling of the spray liquid tank, use the "Filling table for remaining spray area". To do this, subtract the technical, undiluted residue in the sprayer boom from the calculated refill quantity!

    Refer to the section "Filling table for remaining areas".

Procedure

1. Determine the required water and agent spray rate by consulting the directions for use of the crop protection agent.
2. Calculate the filling quantity or refill quantity for the area to be treated.
3. Fill the machine and blend in the agent.
4. Agitate the spray liquid before commencing spraying operations in accordance with the instructions of the spraying agent manufacturer.

Fill the machine preferably using a suction hose and blend in the agent while filling.

The induction area is thereby flushed with water constantly.

- During the filling process, start blending in the agent once the tank filling level has reached more than 20%.
- When using more than one agent:
  - Clean the canister immediately after each induction of an agent.
  - Flush the induction port after each induction of an agent.

- When filling, no foam must escape from the spray agent tank.

  The addition of a froth-inhibiting agent also prevents the spray liquid tank from frothing over.

The agitators normally remain switched on from the initial filling to the end of the spraying operation. On this account, the instructions of the agent manufacturer are decisive.

- With the agitator running, feed the water-soluble plastic bag directly into the spray agent tank.
- Before spraying, fully dissolve the urea by circulating the liquid. When dissolving large quantities of urea, the temperature of the spray liquid falls more sharply; the urea consequently dissolves more slowly. The warmer the water, the faster and more completely the urea can dissolve.

- Carefully wash the empty agent canisters, render them unusable, collect and dispose of them in a proper manner. Do not reuse them for other purposes.
- If only spray liquid is available for washing the agent canisters, first use this to carry out preliminary cleaning. Then wash them meticulously when clear fresh water is available, e.g. before preparing the next load for the spray liquid tank or when diluting the residue from the last load.
- Carefully wash out the empty agent tank (e.g. using canister flushing) and add the flushing water to the spray liquid!

High degrees of water hardness above 15° dH (German degrees of hardness) can lead to lime deposits, which may impede the functioning of the implement and must be removed at regular intervals. See Maintenance section.

12.1.1 Calculating the filling and re-fill quantity

To calculate the required re-fill quantity for final filling of the spray liquid tank use the "Filling table for remaining spray area", page 167.

Example 1:

The following are given:

Tank nominal volume	1000 l
Residue in the tank	0 l
Water consumption	400 l/ha
Agent required per ha	
Agent A	1.5 kg
Agent B	1.0 l

Question:

How many litres of water, how many kg of Agent A and how many litres of Agent B must be used to treat a surface of 2.5 ha in area?

Answer:

Water:	400 l/ha	x	2.5 ha	=	1000 l
Agent A	1.5 kg/ha	x	2.5 ha	=	3.75 kg
Agent B	1.0 l/ha	x	2.5 ha	=	2.5 l

Example 2:

The following are given:

Tank nominal volume	1000 l
Residue in the tank	200 l
Water consumption	500 l/ha
Recommended concentration	0.15 %

Question 1:

How many litres or kg of agent are needed to fill the tank?

Question 2:

How large is the area to be treated in ha if a residue of 20 l remains in the tank after spraying?

Formula and answer to Question 1:

$$\frac{\text{Refill amount of water [l] x Concentration [\%]}}{100} = \text{Addition of agent[l or kg]}$$

$$\frac{(1000 - 200)\ [l] \times 0.15\ [\%]}{100} = 1.2\ [l \text{ or } kg]$$

Formula and answer to Question 2:

$$\frac{\text{Quantity of liquid available [l] – Residue [l]}}{\text{Water consumption [l/ha]}} = \text{Area to be treated [ha]}$$

$$\frac{\text{1000 [l] (tank nominal volume) – 20 [l] (residue)}}{\text{500 [l/ha] Water consumption}} = \text{1.96 [ha]}$$

12.1.2 Filling table for remaining spray area

To calculate the required re-fill quantity for final filling of the spray liquid tank use the "Filling table for remaining spray area". Deduct the residue in the spray line from the calculated re-fill quantity. See "Spray lines" section, page **53**.

The specified re-fill quantities apply for a spray rate of 100 l/ha. For other spray rates, the re-fill quantity increases by a multiple.

Distance travelled [m]	Re-fill quantities [l] for sprayer booms with working widths [m] of									
	20m	21m	24 m	27 m	28 m	30 m	32 m	33 m	36 m	40 m
10	2	2	2	3	3	3	3	3	4	4
20	4	4	5	5	6	6	6	7	7	8
30	6	6	7	8	8	9	10	10	11	12
40	8	8	10	11	11	12	13	13	14	16
50	10	11	12	14	14	15	16	17	18	20
60	12	13	14	16	17	18	19	20	22	24
70	14	15	17	19	20	21	22	23	25	28
80	16	17	19	22	22	24	26	26	29	32
90	18	19	22	24	25	27	29	30	32	36
100	20	21	24	27	28	30	32	33	36	40
200	40	42	48	54	56	60	64	66	72	80
300	60	63	72	81	84	90	96	99	108	120
400	80	84	96	108	112	120	128	132	144	160
500	100	105	120	135	140	150	160	165	180	200

Fig. 2

Example:

Distance still to travel (travel distance): 100 m
Spray rate: 100 l/ha
Working width: 21 m
Number of part width sections: 5
Spray line residue: 5.2 l

1. Calculate the re-fill quantity using the filling table. For the example, the re-fill quantity is **21 l**.
2. Deduct the residue in the spray line from the calculated re-fill quantity.

Required re-fill quantity: 21 l – 5.2 l = 9.8 l

12.1.3 TwinTerminal filling diagram

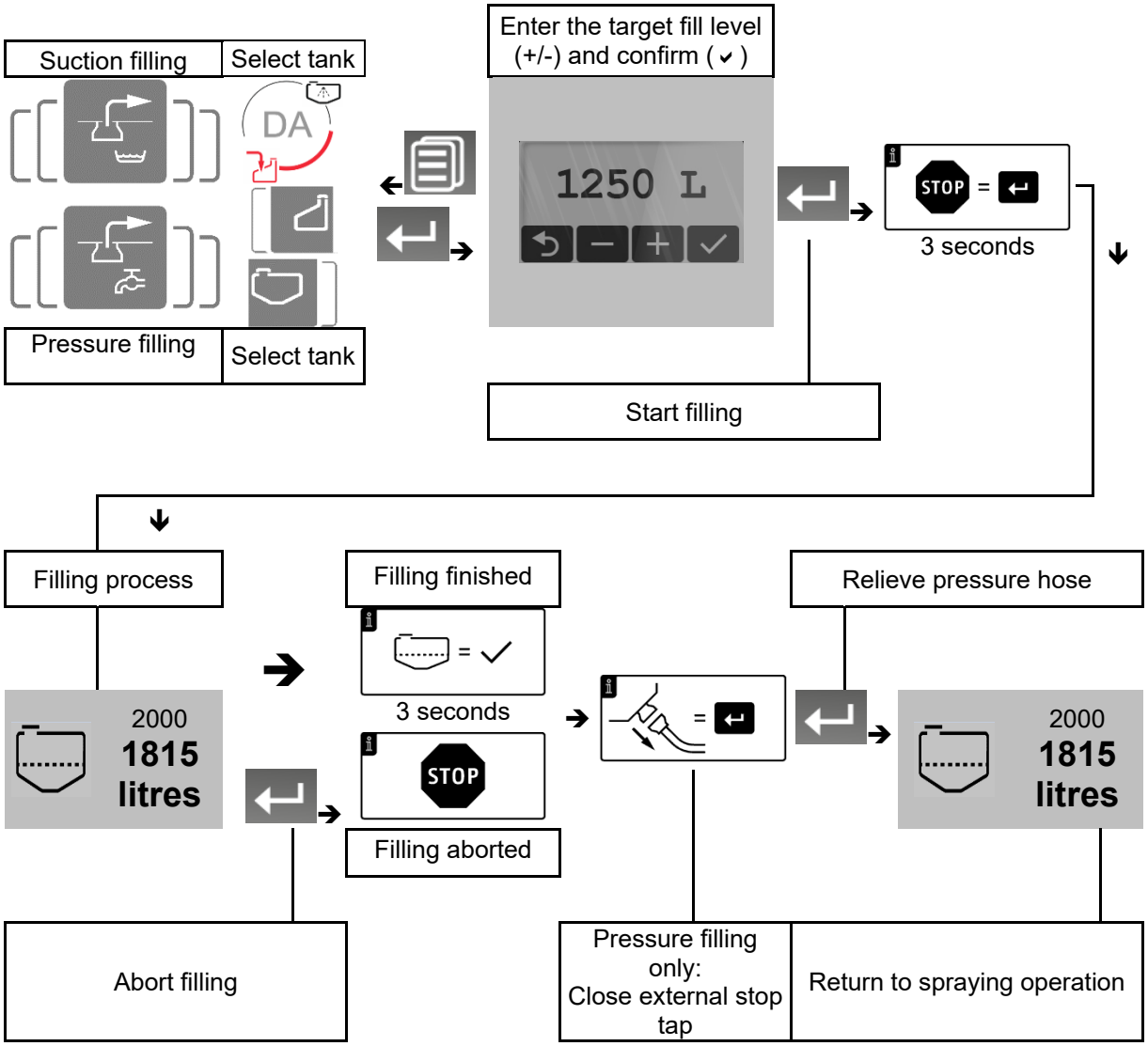

12.1.4 Filling the spray liquid tank and flushing water tank through the suction connection

Preferably perform the filling from a suitable container and not from an open water access point.

Follow regulations closely when filling the spray liquid tank from an open water access point using a suction hose.

To prevent pump damage during suction filling:

Ensure a continuous minimum diameter of the suction hoses / taps of 3 inches.

WARNING

Contamination of the flushing water tank with spray agent when filling through the suction hose with the spraying pump.

You must observe the following safety measures:

- Before filling the flushing water tank with the spraying pump, the spray liquid tank must be filled with at least 600 l of water (cleaning the valve chest).
- Before filling the flushing water tank with the spraying pump, clean the implement thoroughly.
- The flushing water tank must be filled before filling of the spray liquid tank is finished. Otherwise, the flushing water tank will be contaminated.
- When filling the flushing water tank with the agitator switched on, the spray liquid tank will still be filled via the agitator

Procedure:

- Spray liquid tank partial filling 500 l
- Flushing water filling up to the target fill level
- Fill the rest of the spray liquid tank up to the target fill level and simultaneously
- Flush in the agents

WARNING

Damage to crops and soils due to critical agents during suction filling of the flushing water tank:

- Clean the implement thoroughly beforehand.
- Suction filling is forbidden if contamination of the flushing water tank with critical agents is to be expected.
- It is better to fill the flushing water tank through the pressure connection.

WARNING

Forbidden contamination of the flushing water tank with crop protection agents or spray liquid!

Only fill the flushing water tank with clear fresh water, and never with crop protection product or spray liquid.

WARNING

Damage to the suction valve chest caused by pressure filling via the suction connection!

The suction connection is not suitable for pressure filling. This also applies for filling from a higher-elevation source.

1. Couple the suction hose with the suction connection and the water point.
2. Pressure valve chest **DA** in position .
3. TwinTerminal:
   (see TwinTerminal diagram)
   3.1 Switch on the hydraulic pump drive (at least 400 rpm).
   3.2 Select suction filling .
   3.3 Enter the target fill level and confirm.

→ The spray liquid tank must first be filled with at least 500 l to clean the valve chest.

4. Pressure valve chest **DA** in position .

→ Filling of the flushing water tank starts.

WARNING
Contamination of the flushing water tank with spray liquid!

Filling of the flushing water tank may never be interrupted using the TwinTerminal . Spray liquid is pumped into the flushing water tank.

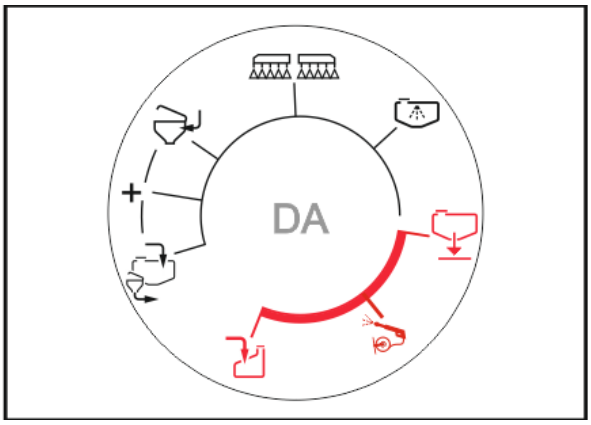

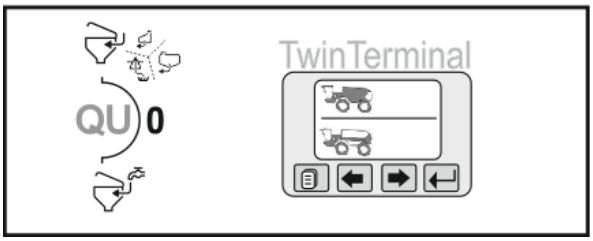

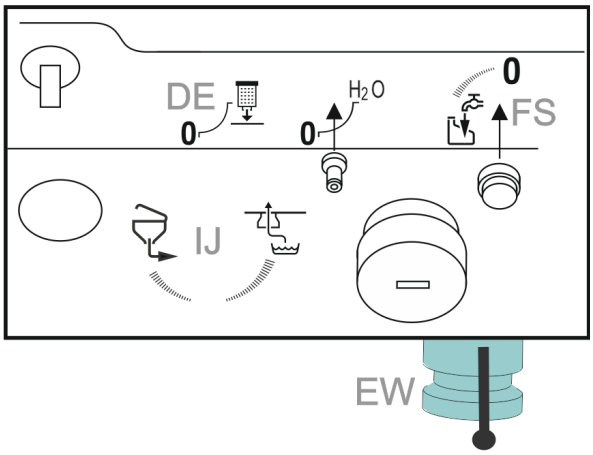

5. Control terminal : Switch off the agitator.

→ Otherwise, the spray liquid tank will continue to be filled via the agitator.

As soon as the flushing water tank is full (observe the fill level):

6. Pressure valve chest: Select position .

→ Continue filling the spray liquid tank.

7. Control terminal: Switch the agitator back on.

8. While filling, flush in the agents through the induction bowl.

9. If it is not possible to flush in the agents before the target fill level is reached, interrupt the filling procedure.

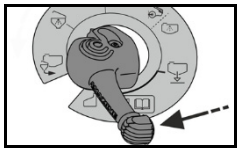

→ Lock the pressure valve chest.

Filling is automatically stopped when the target fill level has been reached.

10. Uncouple the hose from the filling connection.

The hose is still filled with water.

11. Pressure valve chest **DA** in position .

WARNING
Contamination of the flushing water tank with spray liquid!

Filling of the flushing water tank must be finished before filling of the spray liquid tank is terminated by the automatic fill stop.

12.1.5 Filling the spray liquid tank and flushing water tank through the DK pressure connection

- The spray liquid tank and flushing water tank can be filled simultaneously.
- It is better to fill the flushing water tank through the pressure connection to prevent contamination of the flushing water tank with spray liquid residues.

CAUTION

- Maximum permitted water pressure: 8 bar
- At a filling capacity greater than 600 l/min, keep the cover of the spray liquid tank open during the filling procedure.

Otherwise, the spray liquid tank can be damaged.

CAUTION

Implement damage, contamination of the flushing water tank and treatment damage on the field.

Only use the pressure connection for water.

1. Couple the pressure hose with the pressure connection **DK** and the hydrant.
2. TwinTerminal: Select (Pressure filling), see TwinTerminal diagram.
3. Filling the spray liquid tank
   3.1 Select the spray liquid tank.
   3.1 Enter the target fill level and confirm.

→ The spray liquid tank will be filled up to the target fill level.

4. While filling, flush in the agents through the induction bowl.
5. After the filling process, close the supply-side stop tap, relieve the pressure hose, and uncouple the hose from the filling connection.

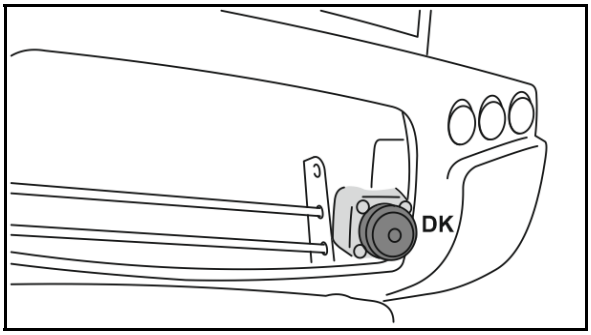

The hose is still filled with water.

12.1.6 Filling the flushing water tank through the FS pressure connection

Before flushing in the agents, the flushing water tank needs to be filled so that flushing water is available in the induction bowl.

- Start and stop the filling procedure with the FS switch tap.
- Watch the fill level on the TwinTerminal during the filling procedure.

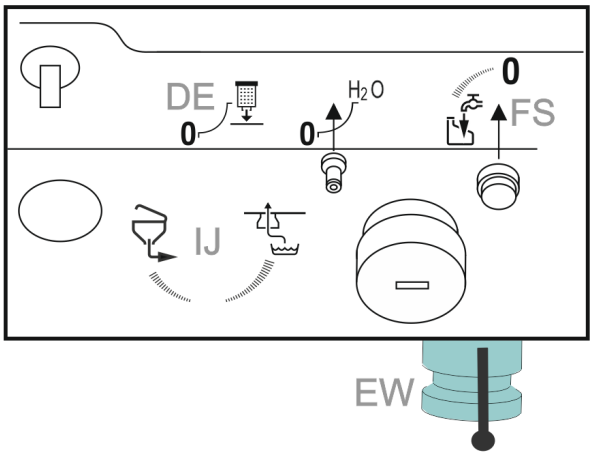

12.1.7 Adjusting the agitator

Adjust the agitator before induction.

1. TwinTerminal: Select (Agitator), see TwinTerminal diagram.
2. Select the desired agitation level and confirm.

→ The agitation level will be displayed on the TwinTerminal.

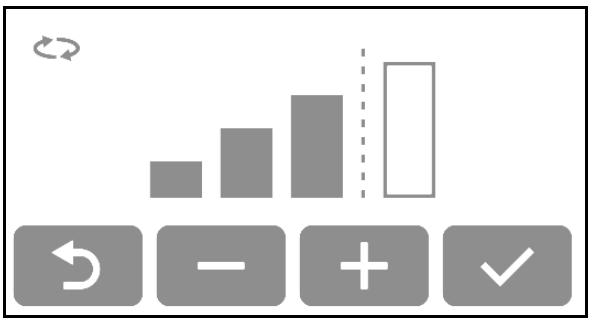

12.1.8 Flushing agents via the induction bowl

DANGER

Risk of injury due to contact with spray agents and spray liquid.

Wear personal protective equipment.

Flush in the agents during the filling procedure.

1. Drive the pump (at least 400 rpm).
2. Lower the induction bowl.
3. Open the induction bowl cover.
4. Switch tap **EB** in position for liquid agents.

   Switch tap **EA** in position for powder-form agents.
5. Select switch tap **QU** water supply to the induction bowl:

   Water from the suction valve chest.

   Water from the pressure filling.
6. Pressure valve chest **DA** in position + .
7. Injector switch tap **IJ** in position (adjustable suction intensity).
8. Pour the quantity of agent calculated and measured for filling the tank into the induction bowl.

→ The contents of the induction bowl will be drawn out.

9. Close the cover of the induction bowl.
10. Close switch tap **EA** / **EB**.

To increase user protection, for example when handling powder agents, first pour the agent into the induction bowl (maximum 60 l), close the cover and only then apply suction.

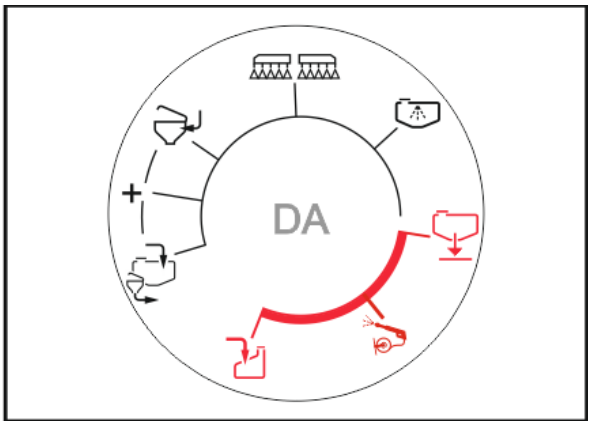

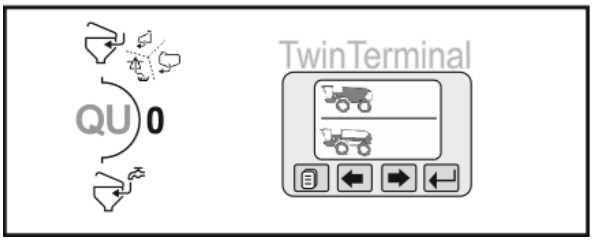

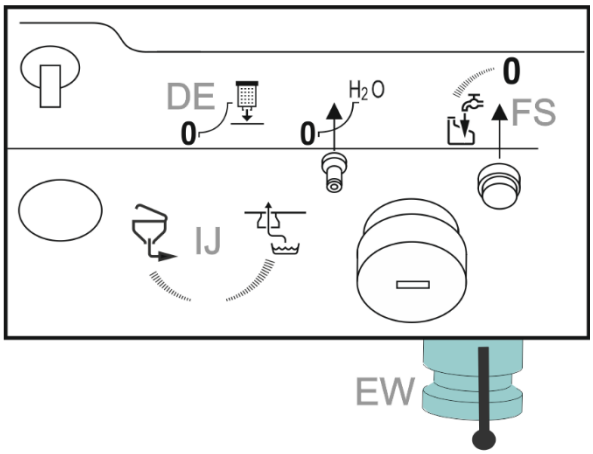

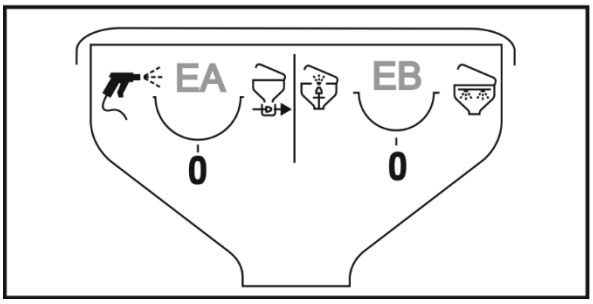

Use clear, fresh water for flushing the canisters and cleaning the induction bowl.

If the filling procedure is already finished, use flushing water.

→ TwinTerminal: Select (Flushing water suction), see TwinTerminal diagram.

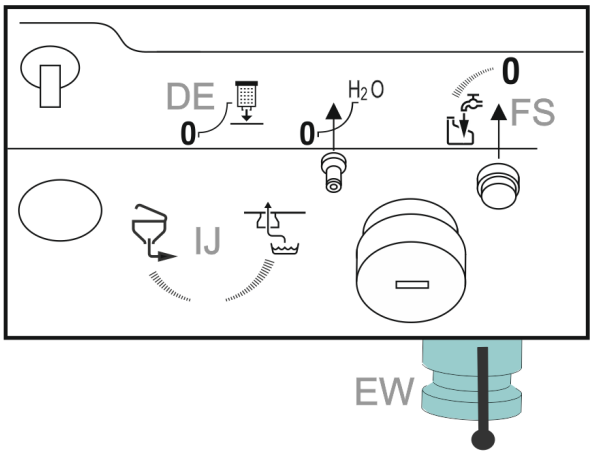

Flush the canister:

1. Switch tap **EB** in position .
2. Wash the canister or other containers using the canister flushing equipment. First position 1, then position 2.
3. Press the canister down for at least 30 secs.

→ The canister is rinsed with water.

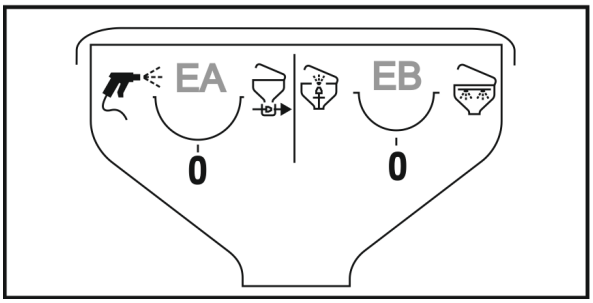

Pressure valve chest **DA** in position to increase the capacity of the canister rinsing.

Cleaning the induction bowl:

4. Switch tap **EA** in position .
5. Clean the surrounding area with the spray pistol.
6. Close switch tap **EA**.
7. Close the cover of the induction bowl.
8. Start the internal cleaning for the induction bowl using the button.
9. Close switch tap **EA**.
10. Switch off the injector switch tap **IJ** for suction from the induction bowl (0%).
11. Lift the induction bowl.
12. TwinTerminal: Select (Spray liquid suction).

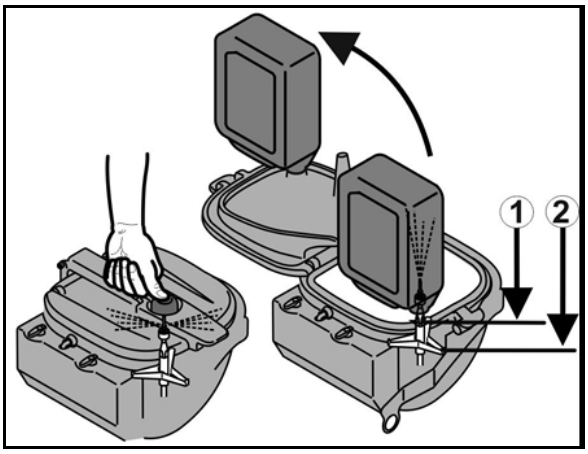

12.1.9 Spray agent suction from containers (closed transfer system)

1. Run the pump.
2. Couple the spray agent container with a drip-free plug coupling.
3. Couple the flushing connection.
4. TwinTerminal: Select (Spray liquid suction).
   Alternative: Suction during the suction filling.
5. Pressure valve chest **DA** in position .
6. Start suction using switch tap GA, adjust the intensity (0-100%).
7. Stop the suction using switch tap **GA** when the desired quantity has been drawn from the container.

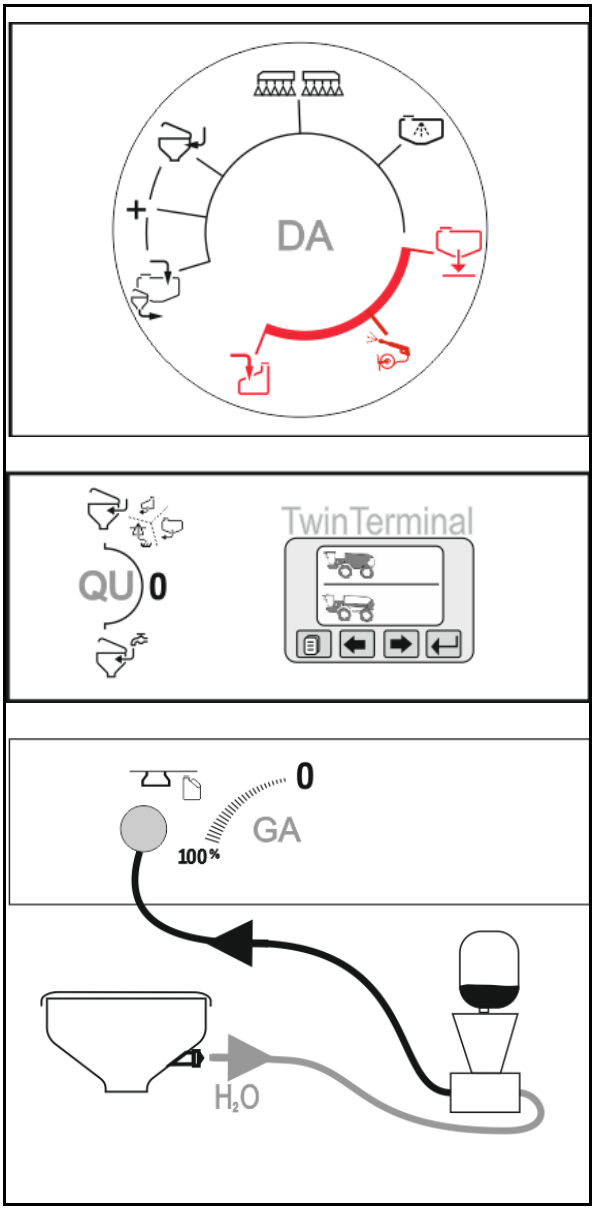

Cleaning contaminated components:

1. TwinTerminal: Select (Flushing water suction).
2. Start suction using switch tap GA, adjust the intensity (0-100%).
3. Pressure valve chest DA in position .
4. Pressure valve chest **DA** in position to stop the cleaning.
5. Switch tap **GA** in position 0.

12.2 Spraying operation

Special instructions for spraying operation

- Test the field sprayer by carrying out calibration
  - o before the start of the season.
  - o in the case of deviations between the actual indicated spray pressure and the spray pressure prescribed in the spray table.
- Before starting spraying, determine the exact spray rate required, referring to the instructions of the crop protection agent manufacturer.

→ Before you start spraying, enter the required spray rate (target rate) in control terminal.

- During spraying operation, precisely adhere to the required spray rate [l/ha]
  - o in order to achieve the best possible results from your crop protection measure.
  - o to avoid unnecessary pollution of the environment.
- Select the required nozzle type from the spray table before spraying starts, taking account of
  - o the intended operational speed,
  - o the required spray rate and
  - o the required atomisation characteristic (fine, medium or coarse-dropped) of the crop protection agent used for the crop protection measure.

→ Refer to the section "Spray tables for flat-fan, anti-drift, injector and airmix nozzles", Seite 273.

- Select the required nozzle size from the spray table before spraying starts, taking account of
  - o the intended operational speed,
  - o the required spray rate and
  - o the target spray pressure.

→ Refer to the section "Spray tables for flat-fan, anti-drift, injector and airmix nozzles", Seite 273.

- Select a low operational speed and a low spray pressure to prevent wastage from drifting.

→ Refer to the section "Spray tables for flat-fan, anti-drift, injector and airmix nozzles", Seite 273.

- At wind speeds of 3 m/s, take additional drift reduction measures (refer to the section "Measures for drift reduction", page Seite 180.

- Refrain from use if average wind speeds top 5 m/s (leaves and thin twigs move).
- Only switch the sprayer boom on and off during travel to avoid the application of excessive doses.
- Avoid the application of excessive doses through overlapping caused by imprecise bout tracking from one spray path to the next and/or when cornering on the headland with the sprayer boom switched on.
- During spraying operation, constantly check actual spray liquid consumption with reference to the area treated.
- Calibrate the flow meter if there are any differences between the actual and displayed spray rate.
- Calibrate the distance sensor (pulses per 100 m) if there are differences between the actual distance covered, and that displayed.
  See control terminal instruction manual.
- If spraying operation is interrupted due to bad weather, clean the suction filter, the pump, the valve chest and the spray lines.

- Spray pressure and nozzle size influence drop size and the volume of liquid sprayed. The higher the spray pressure, the smaller the droplet diameter of the spray liquid. The smaller droplets are subject to increased, undesirable drifting.

- The agitator normally remains switched on from filling to the end of spraying operation. On this account, the instructions of the agent manufacturer are decisive.
- If there is a sudden significant drop-off in spray pressure, the spray liquid tank is empty.
- If the spray pressure drops off while conditions remain otherwise unaltered, the suction or pressure filter are blocked.

12.2.1 Applying the spray liquid

1. Prepare and stir the spray liquid correctly in accordance with the instructions from the crop protection product manufacturer.
2. Pressure valve chest **DA** in position .
3. Switch on the control terminal and check the settings.

→ Operate the field sprayer through the Work menu.

4. Unfold the sprayer boom.
5. Switch on the boom guidance

or

Control the boom manually.

6. Drive the pump at the pump operating speed.
7. ON/OFF Switch on spraying operation through the control terminal.

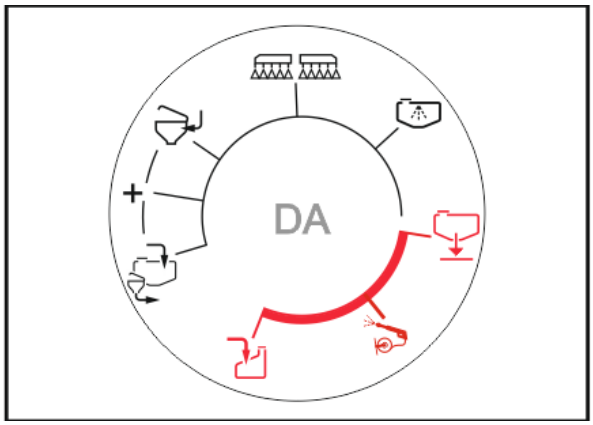

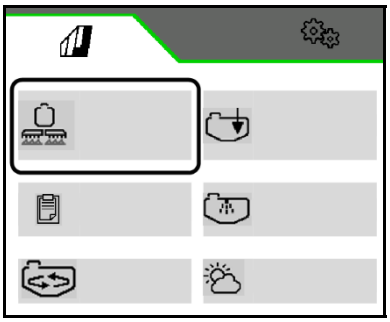

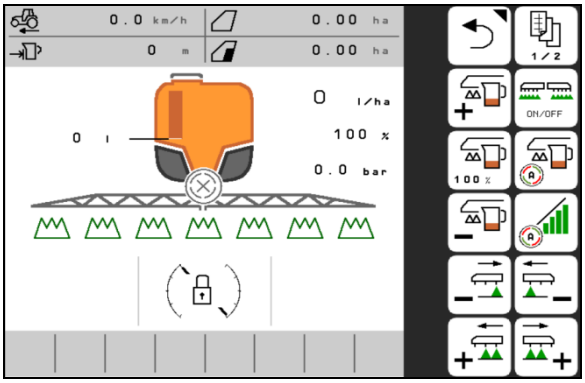

Driving to the field with the agitator switched on

1. Switch on the pump drive.
2. Twin Terminal: To prevent deposits: start circulation cleaning.

12.2.2 Drift reduction measures

- Reschedule treatment for the early morning or the evening hours (there is generally less wind).
- Choose larger nozzles and a higher water spray rate.
- Precisely maintain the working height of the boom, because the risk of drifting rises very sharply as the distance between the nozzles increases.
- Reduce forward speed (to less than 8 km/h).
- Use so-called anti-drift (AD) nozzles or injector (ID) nozzles (nozzles which produce a high proportion of coarse drops).
- Observe the distance requirements of the respective crop protection agent

12.2.3 Diluting the spray liquid with flushing water

1. Run the pump.

Control terminal, Cleaning menu:

2. Dilute the spray liquid with flushing water.
3. End dilution.

Observe the display for the required quantity of flushing water.

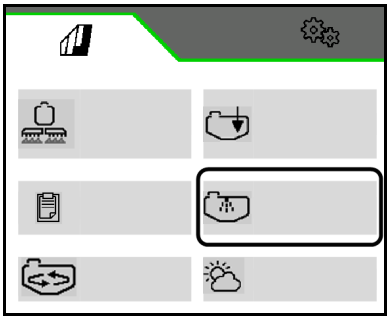

The spray liquid can be diluted for 2 reasons:

- To get rid of excess residual quantities.

  Excess residual quantities in the spray liquid tank are initially diluted with 10 times the quantity of flushing water in order to afterwards spray them out on the field that has already been treated.
- Increase the volume of spray liquid to treat a remaining area.

When spreading residue quantities, observe the maximum permissible application rate of the agent on areas already treated.

The spray liquid is diluted with the Comfort controls on the control terminal.

The spray line is flushed on machines with DUS. When restarting the spraying, two to five minutes will elapse until concentrated spray liquid can be applied.

12.3 Residual amounts

There are three types of residue:

- excessive residue remaining in the spray liquid tank when the spraying operation is finished

→ This excessive residue is discharged diluted or pumped-out and disposed of.

- the technical residue that remains in the spray liquid tank, the suction chest and the spray line when the spray pressure drops off by 25%

  The suction chest is composed of the suction filter, pump and pressure controller sub-assemblies. Observe the values for the technical residues given.

→ This technical residue is discharged diluted onto the field while cleaning the field sprayer.

- The final residue that remains in the spray liquid tank, the suction chest and the spray line after being cleaned with air discharge from the nozzles.

→ This final diluted residue is drained off after cleaning.

12.3.1 Disposing of the residues

- Make sure that the residue in the spray line continues to be sprayed in an undiluted concentration. Always spray this residue on an untreated area. The distance needed to use up this undiluted residue can be found in the section "Technical Data - spray lines". The residue contained in the spray line is dependent on the sprayer boom working width.
- Measures intended for the user's protection apply when emptying residues. Observe the instructions of the crop protection product manufacturer and wear suitable personal protective equipment.
- Dispose of the collected spray liquid residual quantity in accordance with the corresponding legal guidelines. Collect the spray liquid residual quantities in suitable tanks. Allow the residual quantities of spray liquid to dry up. Dispose of the residual quantities of spray liquid in the correct waste disposal.

Formula for calculating the required distance in [m] for spraying out the undiluted residue in the spray line:

$$\text{Required distance [m]} = \frac{\text{Undiluted residue [l] x 10,000 [m}^2\text{/ha]}}{\text{Spray rate [l/ha] x working width [m]}}$$

12.3.2 Emptying the spray liquid tank using the pump

1. Couple a suitable emptying hose from the external tank to the implement-side emptying connection EW.
2. TwinTerminal: Select (Spray liquid suction).
3. Pressure valve chest **DA** in position .
4. Run the pump.

→ Emptying procedure starts.

5. After emptying, pressure valve chest **DA** in position .
6. Interrupt the pump drive.
7. Uncouple the hose.

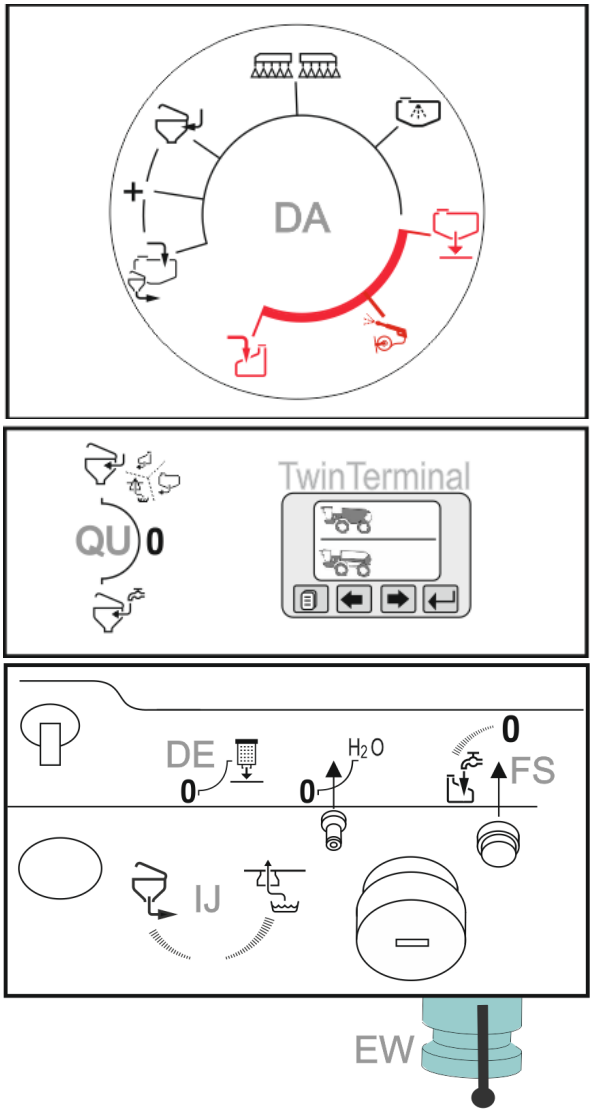

12.4 Cleaning the implement after operation

- Keep the exposure time as short as possible, for example by daily cleaning of the utensils after the spraying operation is completed. Do not leave the spray liquid in the spray liquid tank for an excessively long period, e.g. overnight.

  The service life and reliability of the field sprayer mainly depend on how long the materials of the field sprayer are exposed to the crop protection agent.
- Clean the field sprayer thoroughly before applying a different crop protection agent.
- Carry out the cleaning process on the field where you last carried out the treatment.
- Carry out the cleaning process using water from the flushing water tank.
- You can carry out the cleaning process in the courtyard if you have a collecting facility installed (e.g. a Biobed).

  Observe all national regulations involved.
- When spreading residues on areas already treated, observe the maximum permissible spray rate of the agents.

- Perform a quick cleaning daily.
- Perform an intensive cleaning:
  - before a critical agent change,
  - before taking out of operation for a longer period.
- Perform the cleaning on the field while driving, since cleaning water is applied intermittently.
- The fill level of the flushing water tank must be sufficient.
- Prerequisite: tank fill level < 1 % (tank as empty as possible).

12.4.1 Quick cleaning of the empty field sprayer

1. Run the pump.
2. Check the pressure valve chest: Position 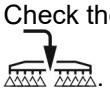 .

Control terminal, Cleaning menu:

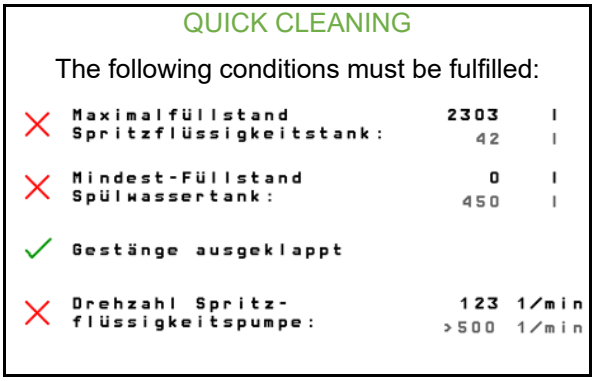

3. The conditions must be fulfilled. Compare the setpoints and actual values.

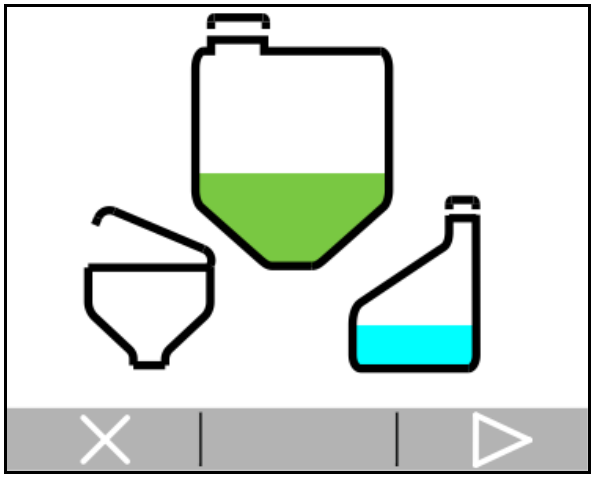

4. **>** Start the quick cleaning.
5. Enter the desired quantity of flushing water for cleaning (minimum 200 litres, maximum 580 litres)

→ Main and secondary agitator are flushed, tank internal cleaning switched on.

Implements with DUS: the spray line is cleaned.

6. **>** Confirm and start driving at the same time.

→ Cleaning water is sprayed out.

Spraying is switched on and off several times.

AmaSelect: The nozzle body is completely flushed.

If necessary, also switch the edge nozzles.

7. **>** Residue will be drained.
   x Do not drain residue (residue will be drained and collected later).
8. Clean the suction filter and pressure filter, see section on cleaning the suction filter / pressure filter.

12.4.2 Intensive cleaning of the empty field sprayer

1. Run the pump.

Control terminal, Cleaning menu:

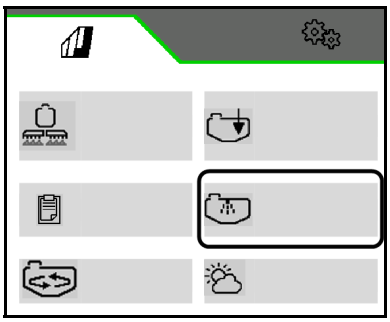

2. The conditions must be fulfilled. Compare the setpoints and actual values.

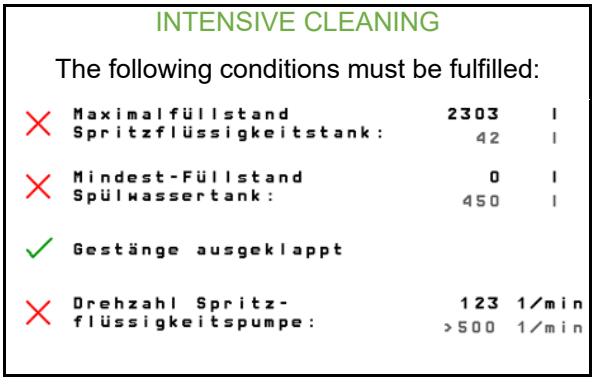

3. **>** Start the intensive cleaning.

4. Enter the desired quantity of flushing water for cleaning (minimum 400 litres, maximum 580 litres).

→ Main and secondary agitator are flushed, tank internal cleaning switched on.

Implements with DUS: the spray line is cleaned.

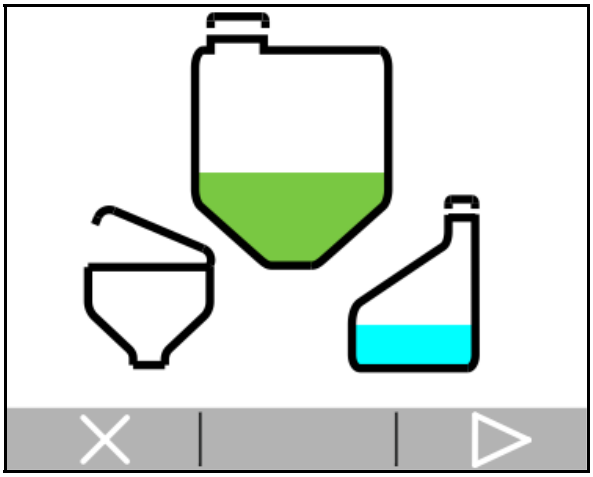

5. **>** Confirm and start driving at the same time

→ Cleaning water is sprayed out.

Spraying is switched on and off several times.

AmaSelect: The nozzle body is completely flushed.

If necessary, also switch the edge nozzles.

6. **>** Residue will be drained.
x Do not drain residue (residue will be drained and collected later).

During the intensive cleaning:

- Spraying out the cleaning water three times while driving on the field.
- Draining the residue two times.

The intensive cleaning procedure takes up to 15 minutes.

7. Drain the final residual quantity.
8. Clean the suction filter and pressure filter.
9. If necessary, clean the nozzle filter and line filter in the boom.

12.4.3 Draining the final residue

- On the field: Spread the final residues over the field.
- In the courtyard:
  - Place a suitable collecting container under the drain opening of the suction chest and the drain hose for the pressure filter and collect the final residues.
  - Dispose of the collected spray liquid residual quantity in accordance with the corresponding legal guidelines.
  - Collect the spray liquid residual quantities in suitable tanks.

1. Place a suitable collecting container under the outlet opening on the suction side.
2. TwinTerminal: Select (Spray liquid suction).

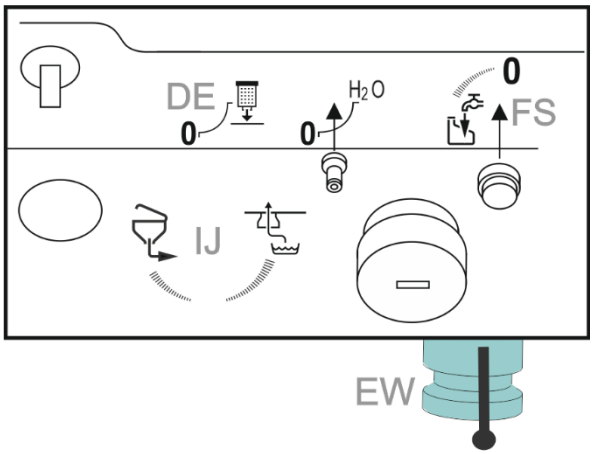

12.4.4 Performing chemical cleaning

- Chemical cleaning is recommended before critical agent changes and before the implement is decommissioned for a longer period of time.
- Perform the chemical cleaning after the intensive cleaning.

1. Clean the implement.
2. Fill the spray liquid tank with 100 l of water and add the cleaning agent according to the instructions provided by the manufacturer.

To flush in the cleaning agent, the spray liquid tank must be filled with at least 200 l of water.

3. Run the pump.
4. Function selection switch **DA** in position .
5. TwinTerminal:

   Start the circulation cleaning (at least 10 minutes, observe the instructions from the cleaning agent manufacturer).
6. TwinTerminal: Select the agitator and operate at maximum intensity for one minute.

   Stop the circulation cleaning.
7. Spray out the mixture on the previously treated field.

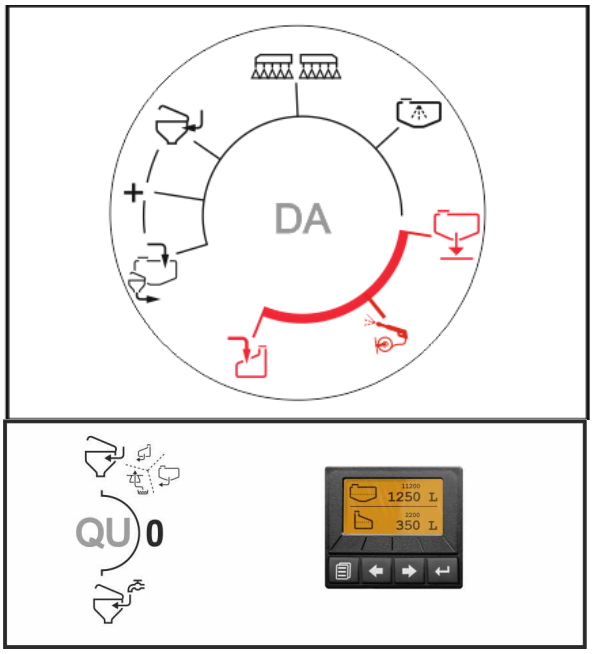

List of available cleaning agents

Product	Manufacturer
Agro-Quick	Adama
JET CLEAR	Sudau agro
Proagro Spritzenreiniger	proagro SE

12.4.5 Cleaning the suction filter and pressure filter

- Clean the suction filter on a daily basis after cleaning the field sprayer.
- Grease the O-rings.
  Make sure that the O-ring seals are correctly fitted.
- Ensure that there are no leaks after installation.
- HighFlow: Also clean the separate HighFlow pressure filter.

Cleaning the suction filter when the tank is filled

1. Run the pumps.
2. Attach the sealing cap to the suction coupling.
3. TwinTerminal: Select suction filling.

→ Enter a target quantity that is increased by at least 200 litres.

4. Pressure valve chest **DA** in position .
5. Bleed the suction filter through the venting valve (20 seconds).

→ The contents of the filter cup are sucked out.

6. Remove the suction filter, clean and reinstall.
7. Interrupt the pump drive.

The injector is contaminated with spray liquid.

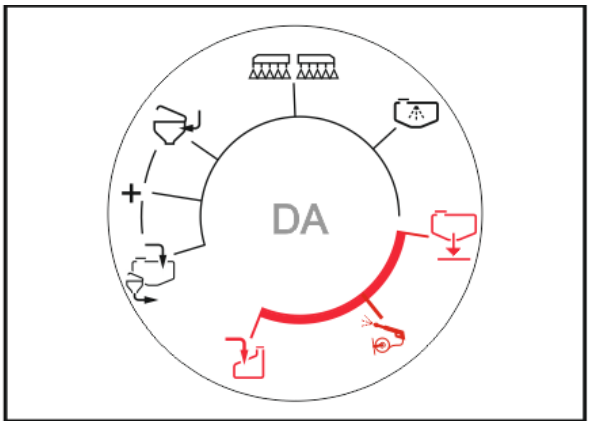

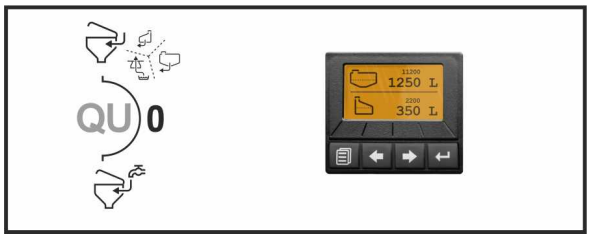

(1) Suction filter

(2) Relief valve

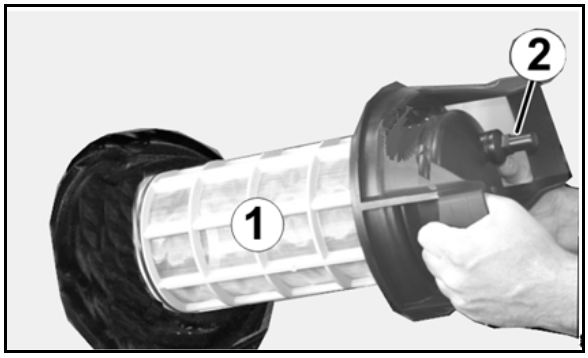

Cleaning the pressure filter when the spray liquid tank is full

WARNING
Unintentional emptying of the spray liquid tank through the quick emptying!

Never run the pump.

HighFlow: Do not clean the separate HighFlow pressure filter when the spray liquid tank is full.

Single nozzle control:
Close the return flow stop tap on the sprayer boom (Position 0).

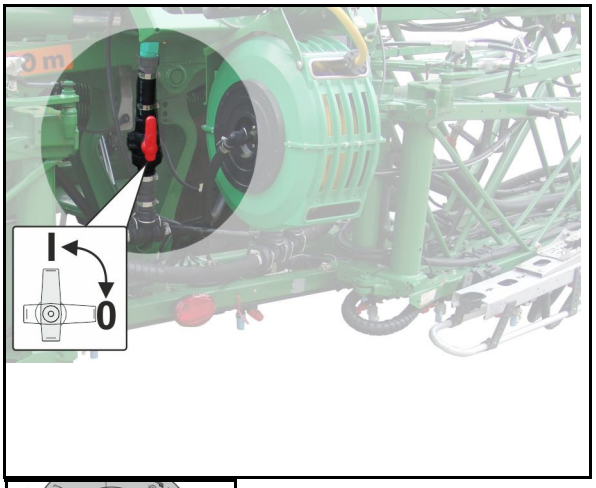

1. TwinTerminal: Select the pressure filter .
2. Switch off the pump and confirm.
3. Pressure valve chest **DA**: block the liquid circulation.

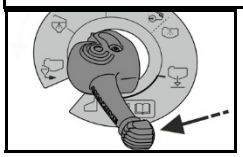

4. Place a collecting bucket under the outlet **EW**.
5. Drain the filter using the stop tap **DE**.
6. Undo the union nut.
7. Remove the pressure filter, confirm.
8. Reinstall the cleaned pressure filter, confirm.
9. Afterwards, put the control elements back to their initial position.

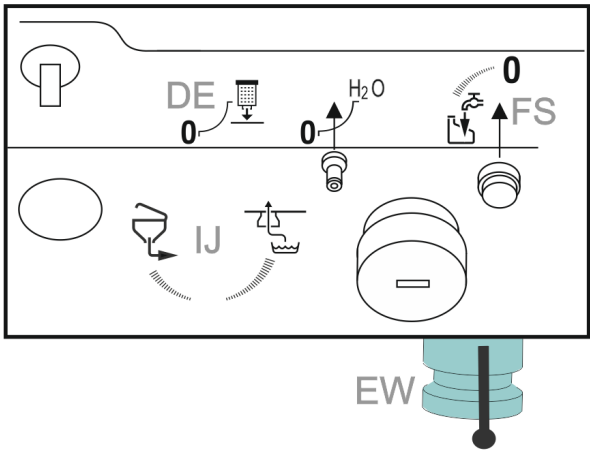

12.4.6 External cleaning

1. Unfold and lower the boom.
2. Run the pumps.
3. TwinTerminal: [ ] (suction from flushing water tank).
4. If internal cleaning was not previously performed:

   Switch tap **DA** in position for 30 seconds until flushing water is available.
5. Pressure valve chest **DA** in Position .
6. Clean the field sprayer and the sprayer boom with the spray gun.
7. Afterwards, put the control elements back to their initial position.

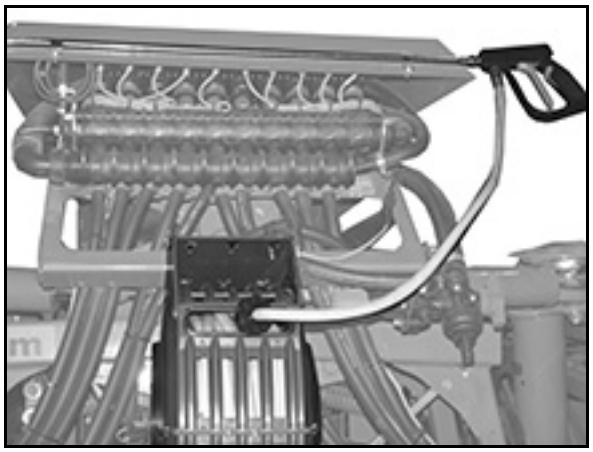

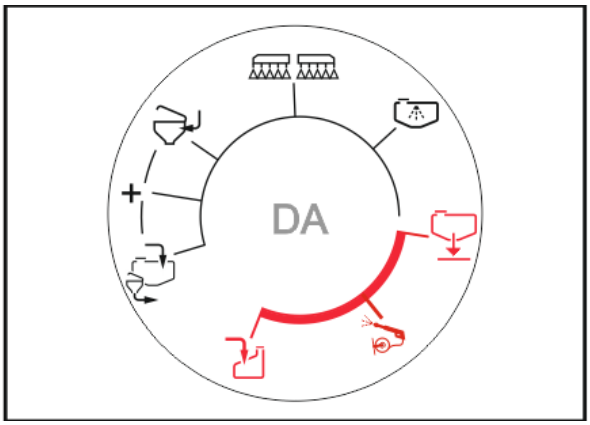

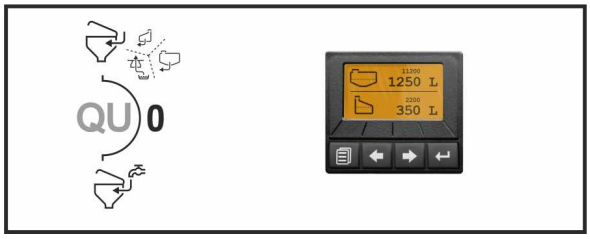

12.4.7 Cleaning the sprayer during a critical agent change

1. Clean the sprayer in three runs as always, see page 185
2. Fill up flushing water tank.
3. Clean the sprayer, two runs, see page 185.
4. If the sprayer has been previously filled via the pressure connector:

   Clean the induction bowl with the spray gun and evacuate the contents of the induction bowl.
5. Drain the final residue, see page 187.
6. By all means, clean the suction filter and pressure filter, see page 189, **190**.
7. Clean the sprayer, one run, see page 185.
8. Drain the final residue, see page 187.

12.4.8 Contact of the implement with liquid fertiliser

Liquid fertiliser that spills or escapes causes corrosion damage to the implement, in particular to the engine and surrounding assemblies.

Clean points thoroughly with clear fresh water!

12.4.9 Flushing the sprayer boom when the spray liquid tank is full

(work interruption)

- If spraying operations must be interrupted because of bad weather, it is important to clean the suction chest (suction filter, pumps, pressure controller) and the spray line.
- Flushing is controlled using the intuitive controls on the control terminal.

1. Control terminal: Flush the boom while driving on the field.
   ✔ Mark the application of spray liquid.

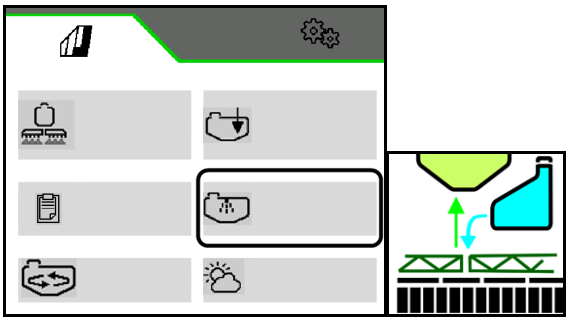

> Start flushing the boom.

X Stop flushing the boom.

2. Clean the suction filter, see section on cleaning the suction filter.
3. Interrupt the pump drive.

Without DUS:

Flush the boom and apply at least 50 litres of flushing water while driving on an untreated area.

With DUS:

Only flush the boom with 50 litres of water, and then flush the nozzles and apply the flushing water on an untreated area.

The spray liquid tank and agitators are not cleaned!

Continuing the spraying operation

1. Run the pump.
2. Control terminal: switch on maximum agitation for at least 5 minutes.

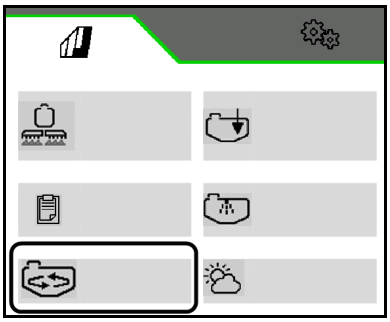

13 Faults

WARNING

Risk of crushing, shearing, cutting, being caught and/or drawn in, or impact through

- **unintentional falling of raised, unsecured machine parts.**
- **unintentional start-up and rolling.**

Secure the machine against unintentional start-up and rolling before eliminating faults on the machine. See page 153.

Wait for the machine to stop before entering the machine danger area.

13.1 Towing the implement

DANGER

Risk of accident when towing the machine when the machine cannot be controlled.

Towing the implement on public roads is forbidden.

WARNING

Damage to the machine caused by pulling out the machine when it is stuck on the field.

It is forbidden to pull out the machine using the drawbar when it is stuck.

DANGER

Risk of injury and death in case of slipping of the machine.

The machine may only be prepared for towing on a level surface, since the wheels can turn freely and the brakes are not functional.

WARNING

Risk of injury or even death due to sluggish steering while towing.

Drive very slowly when towing the implement.

1. Empty spray liquid tank
2. To dismantle the reduction shaft on all wheels:

   Remove the central screw cap, pull out the reduction shaft with M6 bolt and screw in screw cap back in with 90 Nm.

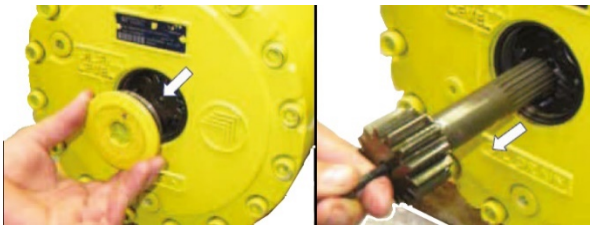

3. Install the tow bar on the towing device.
4. Tow the implement at a maximum of 5 km/h.
5. After towing, remount the reduction shaft.

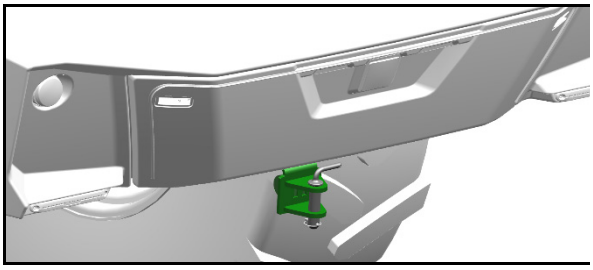

13.2 Malfunctions during spraying operation

Fault	Cause	Remedy
Liquid does not emerge from the nozzles.	The nozzles or nozzle filters are clogged.	Eliminate the blockage, see page 197.
Liquid does not emerge from the nozzles.	The nozzles are clogged.	Eliminate the blockage
AmaSelect: Nozzles do not close completely	Limescale in the nozzle body	Eliminate limescale in the system, refer to the Maintenance section
There is no suction from the pump	Blockage on the suction side (suction filter, filter insert, suction hose).	Remove the blockage.
	Pump is sucking in air.	Check the hose connection of the suction hose (optional) on the suction port for leak tightness.
The pump does not have any power	Suction filter and filter insert dirty.	Clean suction filter and filter insert.
	The valves are jammed or damaged.	Change the valves.
	Pump is sucking in air, recognisable from the air bubbles in the spray liquid tank.	Check the hose connections on the suction hose for leak tightness.
The spray cone vibrates	Irregular delivery flow from the pump.	Check, and if necessary replace, the suction and pressure-side valves (see Seite 243).
Oil/spray liquid mixture in the oil filler neck or clearly visible consumption of the oil	Pump diaphragm defective.	Change all six piston diaphragms (see 244).
Control terminal: **The required spray rate entered is not achieved**	High operational speed; low pump drive speed;	Reduce the operational speed and increase the pump drive speed until the fault message disappears and the audible alarm signal stops
Control terminal : **There has been a deviation from the permissible spray pressure range for the nozzle fitted to the sprayer boom**	Deviation from the prescribed operational speed, which has an effect on the spray pressure	Alter your operational speed to return to the prescribed operational speed range set for spraying operation
Cab category 4: Minimum cab pressure is not reached. Possible contamination of the cab with toxic aerosols or fumes.	Filter elements clogged.	Stop working and have the filters replaced in a specialist workshop.
In some cases, liquid does not come out of the nozzles when spraying out during the cleaning procedure.	The spray liquid tank was emptied too much the last time it was sprayed out, so that it now contains no or too little cleaning water.	Reduce the forward speed and/or the target application rate to ensure controlled spraying out during the cleaning procedure.

13.2.1 Eliminate the blockages in the nozzles and nozzle filters

1.

Switch off spraying.
2. AmaDrive: flush the boom and spray out the flushing water, see page 193.
3. Stop the implement!
4. Lift the boom to a nozzle height of 1.50 meters.
5. Secure boom guidance.
6. Switch off the engine
7. Secure the implement.
8. Put on personal protective equipment.
9. Unscrew the bayonet nut with nozzle.
10. Take out the rubber seal and nozzle filter.
11. Use a replacement nozzle and replacement filter,

    or

    Clean the nozzle and filter with compressed air.
12. Mount the replacement nozzle and replacement filter with a bayonet nut and rubber seal.

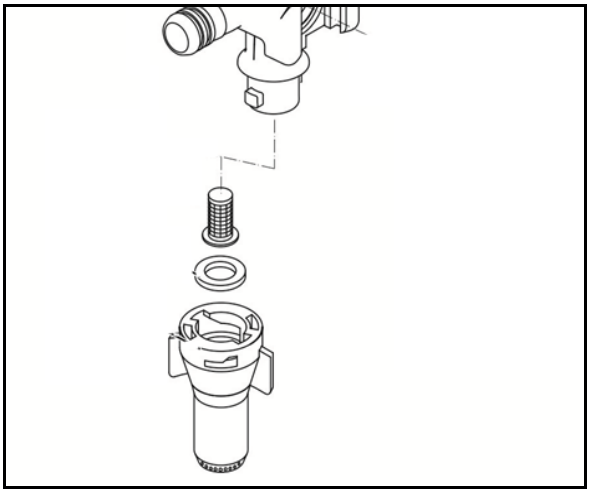

14 Cleaning, maintenance and repair

WARNING

Risk of crushing, shearing, cutting, being caught and/or drawn in, or impact through

- **unintentional falling of raised, unsecured machine parts.**
- **unintentional start-up and rolling of the tractor-machine combination.**

Secure the tractor and machine against unintentional start-up and rolling, before carrying out cleaning, maintenance or repair work on the machine; see page 153.

WARNING

Risk of crushing, shearing, cutting, being caught and/or drawn in, or impact through unprotected danger points.

- Mount protective equipment removed when cleaning, maintaining and repairing the machine.
- Replace defective protective equipment with new equipment.

DANGER

- **When carrying out maintenance and repair, observe the safety instructions, particularly "Field sprayer operation" section.**
- **You may only carry out maintenance or repair work under moving machine parts that are in a raised position if such parts are secured with suitable, positive-fit locking devices against accidental lowering.**

- Regular and proper maintenance will keep your trailed sprayer in good condition for a long time, and will prevent early signs of wear. Regular and proper maintenance is a requirement of our warranty conditions.
- Use only genuine AMAZONE spare parts (see "Spare and wear parts and aids" section, page 17).
- Use only genuine AMAZONE replacement hoses, and hose clamps made of V2A for assembly.
- Specialist knowledge is the requirement for carrying out testing and maintenance operations. This specialist knowledge is not given here in this operating manual.
- Observe environmental protection measures when carrying out cleaning and maintenance work.
- Observe legal requirements when disposing of lubricants, e.g. oils and grease. Also affected by these legal requirements are parts that come into contact with these lubricants.
- Do not exceed a greasing pressure of 400 bar when greasing with high pressure grease guns.
- The following are prohibited:
  - drilling the running gear.
  - drilling through pre-existing holes on the transport frame.
  - welding load-bearing components.
- Protective measures are necessary, such as covering lines or extending lines in particularly critical locations
  - during welding, drilling and grinding work.
  - when working with cut-off wheels near plastic wires and electric wires.
- Clean the field sprayer thoroughly with water before carrying out repair work.
- Carry out repair work on the field sprayer with the pump switched off.
- Thorough cleaning must be carried out before repair work can be carried out inside the spray liquid tank. Keep out of the spray liquid tank.

During welding work on the machine.

- Always separate the power supply to the on-board computer.
- Turn off the main switch.
- Disconnect the battery cable.
- Disconnect the EMR plug (Fig. 148/1) from the controller in the central electrics in the cabin on the right side under the armrest next to the cabin.

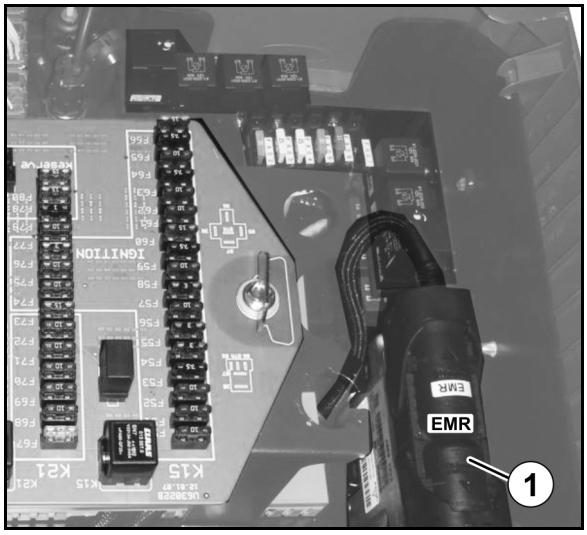

Fig. 3

14.1 Cleaning

- Monitor brake, air and hydraulic hose lines particularly carefully
- Never treat brake, air and hydraulic hoses with petrol, benzene, petroleum or mineral oils.
- After cleaning, grease the machine, in particular after cleaning with a high pressure cleaner/steam jet or liposoluble agents.
- Observe the statutory requirements for the handling and removal of cleaning agents.

Cleaning with a pressure washer / steam jet

- Always observe the following points when using a pressure washer / steam jet for cleaning:
  - Do not clean any electrical components.
  - Do not clean any chrome-plated components.
  - o Never aim the cleaning jet of the cleaning nozzle of the high pressure cleaner/steam jet directly at lubrication points, bearings, rating plates, warning signs, and stickers.
  - Always maintain a minimum jet distance of 300 mm between the high pressure or steam jet cleaning nozzle and the machine
  - The set pressure of the high-pressure cleaner / steam jet must not exceed 120 bar.
  - Comply with the safety regulations when working with high pressure cleaners.

14.2 Winter storage and long periods out of operation

Spraying technology

For winter storage, the remaining water / spray liquid is diluted in the entire liquid circuit with a sufficient amount of antifreeze to prevent frost damage.

80 l of antifreeze are required.

AMAZONE recommends wintering with a propylene glycol-based antifreeze (e.g. Glysofor L).

Liquid fertiliser is not suitable as frost protection and can damage the implement.

1. Clean the implement and empty it completely.
2. Drain the flushing water tank through the hose connection at the bottom of the tank, and reinstall correctly later on.
3. Start the drive motor on the machine and secure the machine against accidentally driving off.
4. Start the spraying pump.

Filling antifreeze into the flushing water tank:

5. Switch tap **QU** in position
6. Connect the suction hose to the suction connection and put it in the tank with anti-freeze.
7. Pressure valve chest **DA** in position .
8. TwinTerminal: Fill the flushing water tank.

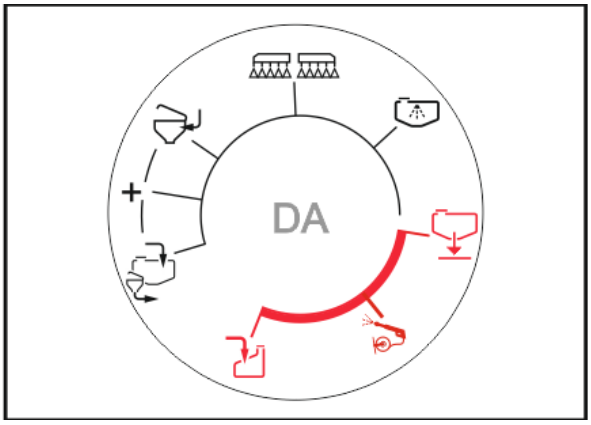

Pumping antifreeze into the spray liquid tank:

9. Pressure valve chest **DA** in position , pump antifreeze into the spray liquid tank. (30 sec.)
10. TwinTerminal: Suction from flushing water tank.

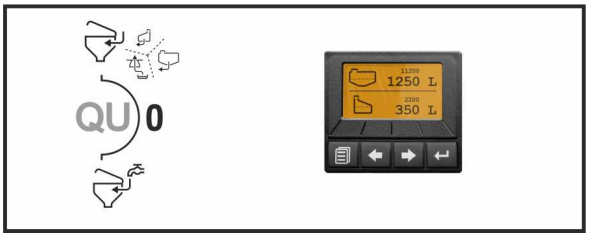

Distributing the antifreeze:

11. TwinTerminal: Suction from the spray liquid tank.
12. Recirculate antifreeze in the entire liquid circuit.

To do so, put the pressure tap **DA** in the following position:

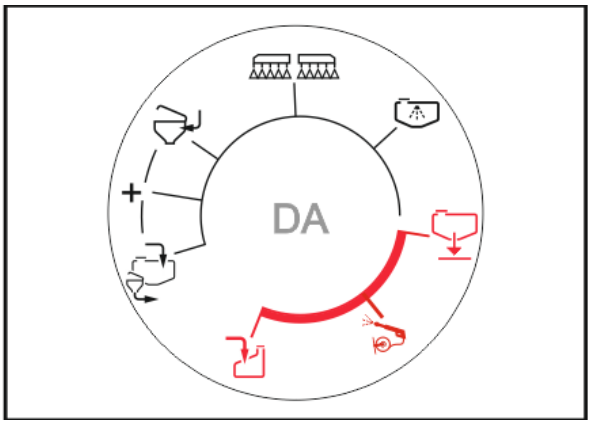

- Internal cleaning (30 seconds)
- Spray the external cleaning into the induction bowl for 10 seconds.

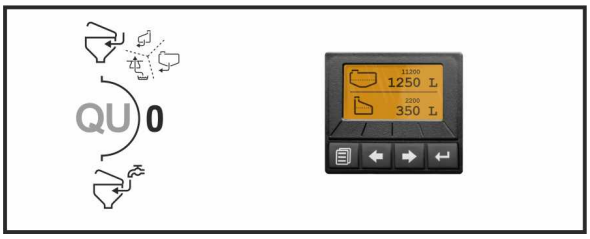

- + and change positions on switch tap **IJ**.

  Then switch tap **IJ** in position .

  switch tap **QU** in position .

  Change the positions of switch taps **EA**, **EB** on the induction bowl, actuate the corresponding functions for 10 seconds and evacuate the content.

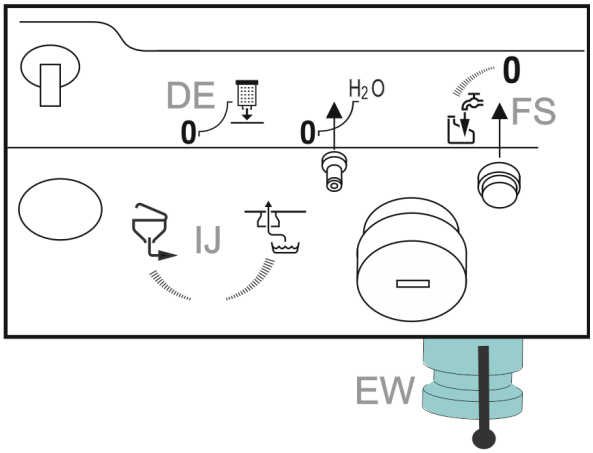

- and switch the agitator on and off at maximum.

  DUS: Allow the antifreeze to circulate for 1 minutes.

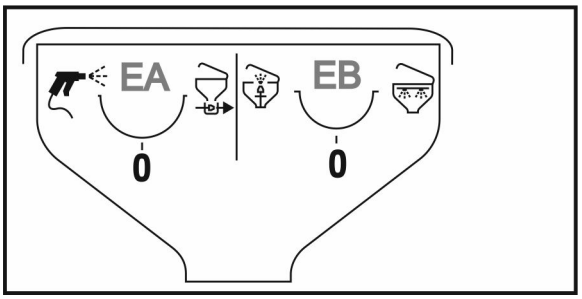

13. TwinTerminal: Activate the circulation cleaning.

14. Machine with HighFlow: Activate HighFlow if necessary. To do so, increase the application rate.

Applying the antifreeze through the nozzles:

15. Unfold the boom.

16. TwinTerminal: select (Spray liquid suction).

17. Switch on spraying until the antifreeze emerges from the nozzles.

- Part-width section control: Switch on and off several times
- AmaSelect: switch through all of the nozzle positions

18. Switch the boundary nozzles / edge nozzles.

⚠ Collect the sprayed liquid!

⚠ Check the sprayed liquid for sufficient frost protection! If necessary, add more antifreeze and repeat the procedure.

Pumping out the antifreeze:

19. Empty the spray liquid tank using the pump.

    Pressure valve chest **DA** in Position .

→ Pump the antifreeze and spray liquid mixture into a suitable tank, re-use or dispose of properly.

20. Drain the suction filter insert and pressure filter insert.

General information:

21. Draining HighFlow:

    switch tap under the Highflow pressure filter in position and allow the spray line to run completely empty.
    Remove the HighFlow pressure filter and clean it.

22. Remove the hose from the pressure sensor to drain the pressure sensor.

23. Drain the pressure sensor.

    - Remove the hose from the pressure sensor, drain the pressure sensor, and reinstall the hose.
    - Screw off the pressure sensor, drain it, and screw it back on.

Super-L boom pressure sensor on the boom valve chest

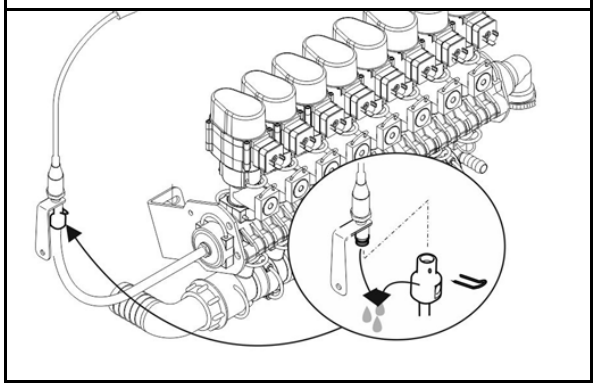

Agitator pressure sensor on the right side behind the cover

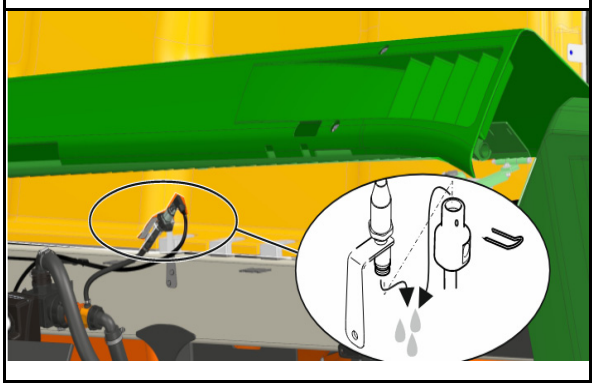

Flushing water tank pressure sensor underneath the flushing water tank

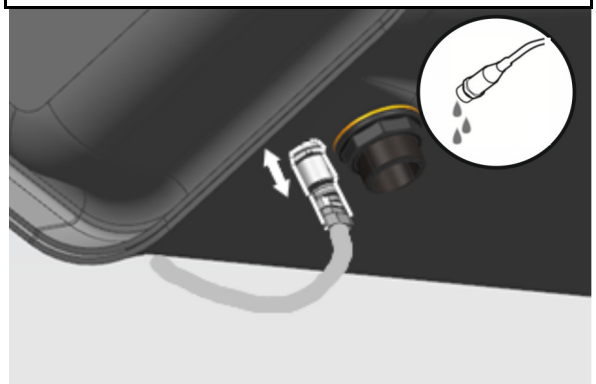

24. Use the drain tap to drain the remaining water in the line filter drain.

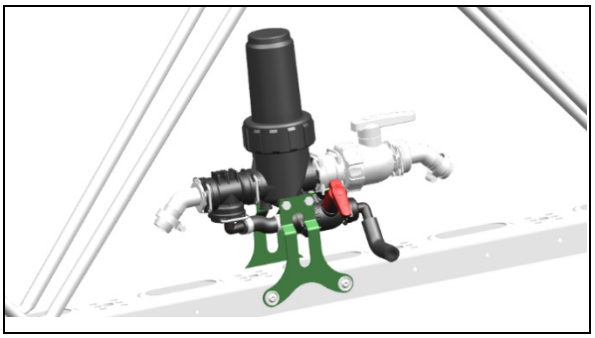

25. Drain the hand wash facility and leave the tap open.
26. Store the pressure gauge and any other electronic accessories in a place where they are safe from frost!
27. Perform an oil change on the pumps before recommissioning.

Vehicle

DEF:

Decommissioning for up to 4 months:

Completely fill the DEF tank.

Decommissioning for more than 4 months:

1. Completely empty the DEF tank.
2. Refill the tank completely with new DEF.
3. Replace the filter insert of the feed pump.
4. Warm up the motor to operating temperature and than apply a load.

If an error is observed:

Switch off the motor and wait for the EDC (Electronic Diesel Control) run-on time to expire.

Repeat the procedure several times if necessary.

If the error cannot be fixed, please contact your DEUTZ partner.

Treat all chromed parts with corrosion protection:

- Piston rods of the hydraulic cylinders
- Track adjustment main shaft
- Height adjustment

→ No warranty coverage for corrosion damage caused by storage.

14.3 Maintenance schedule

- Carry out maintenance work when the first interval is reached.
- The times, continuous services or maintenance intervals of any third party documentation shall have priority.
- Also note the maintenance sheet.

After the first working run

Component	Servicing work	see page	Work-shop work
Wheels	• Tighten wheel bolts	**221**	
Hydraulics	• Visual inspection of the hose lines for de-fects • Check leak tightness	**226**	
Whole machine	• Perform lubrication	**182**	

After the first 50 hours of operation:

Order the initial maintenance kit where necessary.

Component	Servicing work	see page	Work-shop work
Wheel gears	• Oil change	**220**	**X**
Control	• Check the front and rear shock absorber bearings and, where necessary, tighten the bolts.	**235**	**X**
Hydraulics	• Replace the hydraulic return filter	**230**	**X**
	• Replace the hydraulic pressure filter	**230**	**X**
Deutz engine	• Oil change	DEUTZ	**X**
	• Replace the engine oil filter		**X**

Daily

Component	Servicing work	see page	Work-shop work
Cab	• Check door seals, window seals, and cable glands	**232**	
Deutz engine	• Check engine oil level		
	• Check the coolant fill level		
	• Empty the air filter dust discharge valve		
	• Empty the water collection tank in the fuel filter		
Air intake system of the engine	• Remove the dust	**219**	
Hydraulics	• Check the oil level	**230**	
	• Visual inspection of the hose lines for de-fects • Check leak tightness	**226**	
Lighting	• Check function	**-**	
Brakes	• Check function	**-**	
Steering system	• Track correction	**67**	
Spraying pumps	• Check the oil level	**241**	
Spray liquid tank	• Clean or flush	**184**	
Suction filter		**193**	
Self-cleaing pressure filter		**107**	
Nozzles		**252**	
Machine	• Visual check for leaks on all assembly groups that conduct water.	**-**	
Central lubrication	• Check the tank fill level	**-**	
Spraying pump	• Check the oil level • Check the oil (the oil must not be cloudy)	**241**	

Weekly / every 50 operating hours

Component	Maintenance task	see page	Work-shop task
Wheels	• Check the air pressure • Check the tires for firm seat • Check for damage	**221**	

Every three months / Every 100 operating hours

Component	Servicing work	See Page	Work-shop work
Spraying nozzles	• Check	**252**	
Whole machine	• Perform lubrication (if there is no central lubrication)	**182**	
Cab Category 4	• Filter change for activated carbon filter	**233**	**X**
Booms	• Checking the boom for cracks / beginning of crack formation		

Every six months / Every 250 operating hours

Component	Servicing work	see page	Work-shop work
Sprayer boom	• Clean the line filters • Replace damaged filter inserts	**253**	
Cab Category 4	• Filter change for dust and aerosol	**233**	
Cooling system of the Deutz engine	• Check the liquid level and antifreeze	**219** DEUTZ	

Annually / 500 operational hours (Scope of maintenance A)

→ Order the maintenance kit A where necessary

Component	Servicing work	see page	Work-shop work
Deutz engine	• Check the V-belt	DEUTZ	**X**
	• Check the coolant additive concentration		**X**
	• Check the air intake lines for damage		**X**
	• Replace lubricant and oil filter		**X**
Wheel gears	• Check the oil level	**220**	
Hydraulics cooler, engine radiator, air conditioner	• Clean with compressed air	**194**	
Hydraulics	• Replace the hydraulic return filter	**230**	**X**
Hoses that convey spray liquid	• Check for damage	**246**	

Annually / 1000 operational hours (Scope of maintenance B)

→ Order the maintenance kit B where necessary (includes maintenance kit A)

Component	Servicing work	see page	Workshop work
	• **Carry out scope of maintenance A**		
Cab	• Replace the outer air filter • Clean the circulation filter	**232**	**X**
	• Check the front and rear shock absorber bearings and, where necessary, tighten the bolts.	**235**	X
Deutz engine	• Check the charge air cooler entry surface (lubricant, drain condensation water)	DEUTZ	**X**
	• Check battery and cable connections		**X**
	• Check the cold start device		**X**
	• Re-tighten the motor bearing, replace if necessary		**X**
	• Check fastenings, jubilee clips, replace if necessary.		**X**
	• Check the V-belt and tension roller		**X**
	• Replace the fuel filter		**X**
	• Replace the fuel pre-filter		**X**
	• Replace the air filter		**X**
	• Replace the V-belt for the air conditioner		**X**
	• Replace the filter insert for the SCR feed pump		**X**
	• Motor monitoring, check the warning system		**X**
Hydraulic system	• Hydraulic oil change	**230**	**X**
Wheel gears	• Oil change	**220**	**X**
Spraying pumps	• Oil change	**241**	**X**
	• Check the vales, replace if required	**243**	**X**
	• Check piston diaphragm, replace if required	244	**X**
Brakes	• Check the brake linings / brake drums	**223**	**X**
Air intake system of the engine	• Check all parts of brake	**219**	
Hydropneumatic spring suspension	• Check the pressure of the diaphragm accumulator, correct if necessary (30-45 bar when the spring suspension is lowered)		**X**
Sprayer boom	• Determine the volume of the field sprayer and check the lateral distribution, replace worn nozzles	**252**	
Flow meter / return flow meter	• Calibrate	**247**	
Flushing water	• Clean the flushing water suction filter		

Every 2 years / 2000 operational hours (Scope of maintenance C)

→ Order the maintenance kit C where necessary (contents maintenance kit B)

Component	Servicing work	see page	Work-shop work
	• **Carry out scope of maintenance B**		
Deutz engine	• Set the valve clearance	DEUTZ	X
	• Replace the coolant		X
	• Check and clean the charging pressure sensor		X
	• Venturi sensor and the underlying adapter plate of the exhaust gas recirculation		X
	• Differential pressure sensor of the diesel particle filter		X
Air intake system of the engine	• Remove the dust filter	223	X
Air conditioner	• Clean the evaporator and warm water radi-ator	238	X
	• Replace the filter drier	237	X
Compressed air system for the trailer brake	• Replace the air drier cartridge	223	X
Fire extinguisher	• Inspection by Gloria customer services	-	

4000 operational hours

Component	Servicing work	see page	Work-shop work
Deutz engine	• Replace the V-belt and tension roller	DEUTZ	X

6000 operational hours

Component	Servicing work	see page	Work-shop work
Deutz engine	• Replace the crank housing ventilation	DEUTZ	X
	• Replace the coolant		X
	• Clean the turbocharger compressor inlet		X

As required

Component	Servicing work	see page	Work-shop work
Deutz engine	• Replace the diesel particle filter, if a notification appears		**X**
	• Immediately drain the water separator of the fuel pre-filter when a notification appears		**X**
Hydraulic sprayer boom	• Adjust the throttle valve	**240**	
Spray liquid circuit and nozzles	• Eliminate scale deposits	**248**	
Wheels	• Tighten the wheel bolts (after the first trip after changing the wheels)	**221**	
	• Check tyre pressure	**221**	
Brakes	•- Replace brake shoes	**223**	**X**
Air conditioner	• Commissioning following longer standing times	**236**	
Hydraulics cooler, engine radiator, air conditioner	• Clean with compressed air	**194**	
Electro-hydraulic sprayer boom (Flex-folding)	• Functional check		
Battery	• Charge	**238**	

14.4 Maintenance work with the engine running

DANGER
Risk of accident during maintenance work due to the machine starting up unintentionally.

Press the S03 switch before starting maintenance.

The S003 switch

- Prevents movement when the engine is running.
- Under the foldable arm rest
- Is illuminated after being pressed.

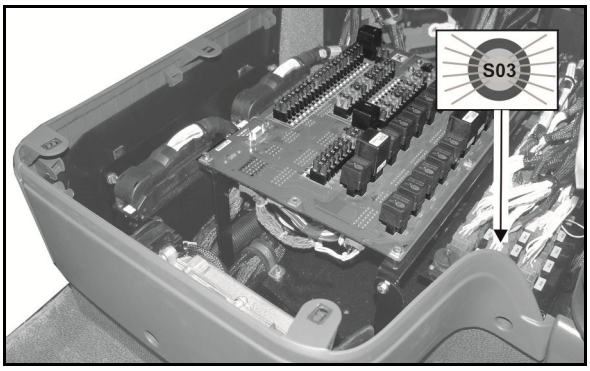

14.5 Hydro-pneumatic pressure reservoir

WARNING
Risk of injury when working on the hydraulic system with pressure reservoir.

Work on the hydraulic block and hydraulic hoses with the pressure reservoir connected may only be performed by specialist personnel.

14.6 Lubrication specifications

- After 10 operational hours, lubricate all lubrication points for the first time!
- Lubricate all grease nipples (keep gaskets clean).
- Regularly oil and lubricate all moving parts such as screws, bolts and bearings.

Lubricate / grease the machine at the specified intervals.

Lubrication points on the machine are indicated with the foil.

Carefully clean the lubrication points and grease gun before lubrication so that no dirt is pressed into the bearings. Press the dirty grease out of the bearings completely and replace it with new grease.

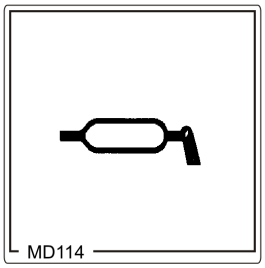

Lubricating grease

	Brand	Designation
Lithium soaped with EP additive, NLGI Class 2 (also suitable for the central lubricating system)	Agip	GR MU EP 2
	Aral	Aralub HLP 2
	Avia	Avialith 2 EP
	BP	Energrease LS 2 - EP 2
	Castrol	Spheerol AP 2
	Esso	Beacon EP 2
	Fina	Marson EPL2A
	Fuchs	Renolit FLM 2
	Shell	Alvania EP 2
	Mobil	Mobilux EP 2

Lubrication points on the running gear

	Lubrication point	Interval [h]	Number of lubrication points	Type of lubrication
(1)	Steering cylinder	100	4 x 2	Lubricating nipple
(2)	Oscillating yoke	100	2 x 2	Lubricating nipple
(3)	Track width cylinder	100	2 x 2	Lubricating nipple
(4)	Oscillating axle	100	2 x 2	Lubricating nipple
(5)	Stub axle	100	4 x 4	Lubricating nipple
(6)	Hydropneumatic sprung suspension	100	4 x 2	Lubricating nipple
(no fig.)	Sprayer boom mount	100	4	Lubricating nipple

(7)	Track width adjustment main shaft grease with a brush corrosion protection (every 100 h and for longer standstill periods)

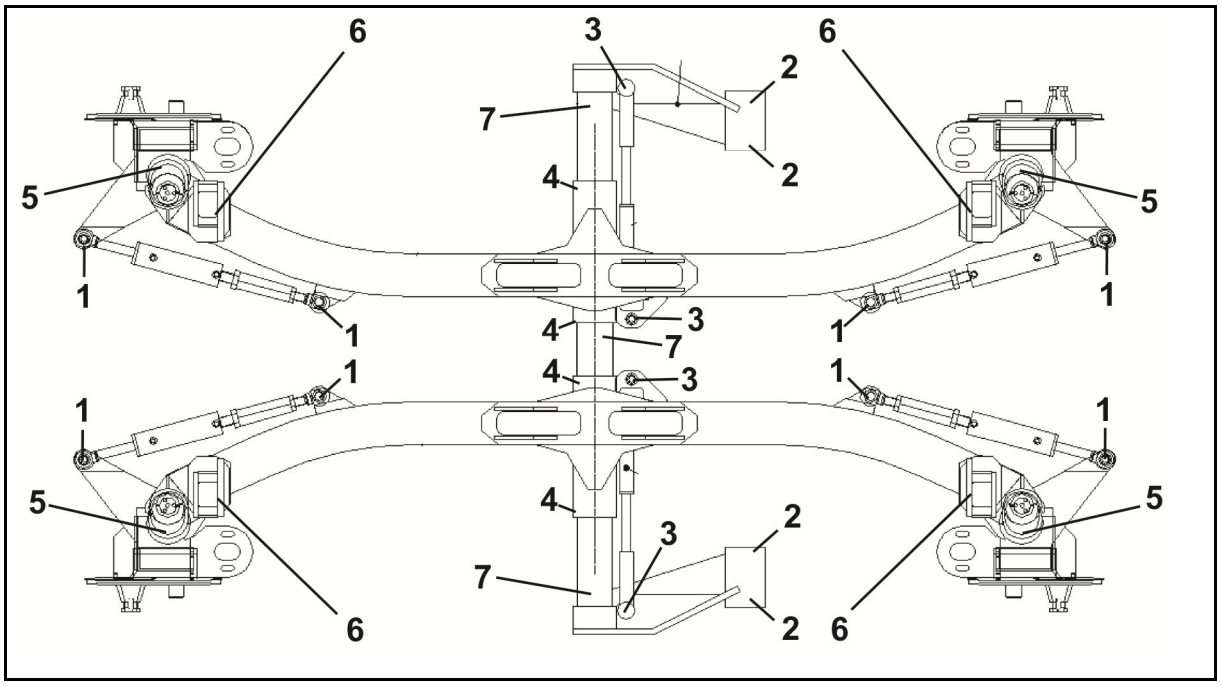

As an additional corrosion protection, run the track width to the minimum and maximum value every 20 operational hours.

Lubrication points on the boom

	Lubrication point	Interval [h]	Number	Type of lubrication
	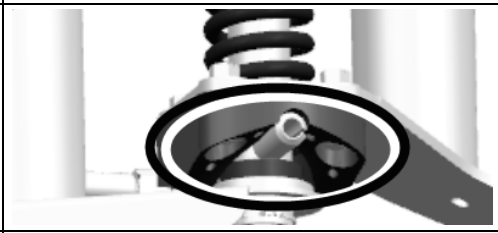			**Not via the central lubrication!**
	Outer boom locking Super S, Super L1, Super L2	100	2	Grease nipple
	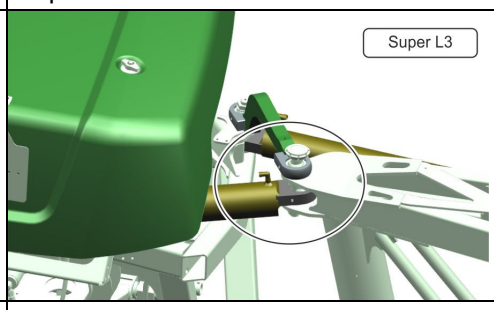			**Not via the central lubrication!**
	Super L3	100	2	Grease nipple
	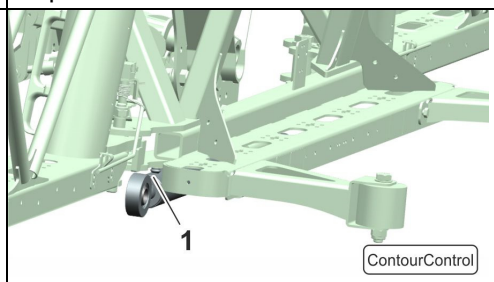			**Not via the central lubrication!**
	ContourControl	100	2	Grease nipple
1	Lifting cylinder	100	4	Grease nipple
	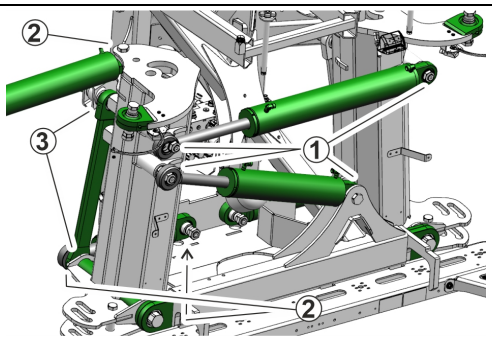			
1-3	Super L3 / Flex 2 / > 38 m	100	16	Grease nipple

	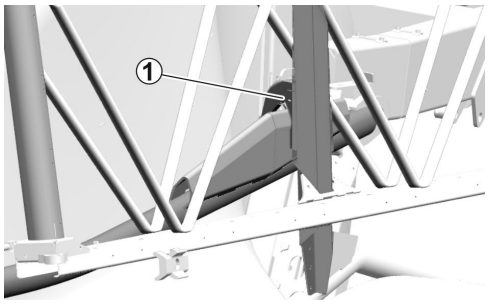			
1	Transport locking	250	2	Grease nipple

14.6.1 Central lubrication

(option)

Function of the central lubrication:

- Includes all the lubrication points on the machine (56 points)
- Automatic dosage

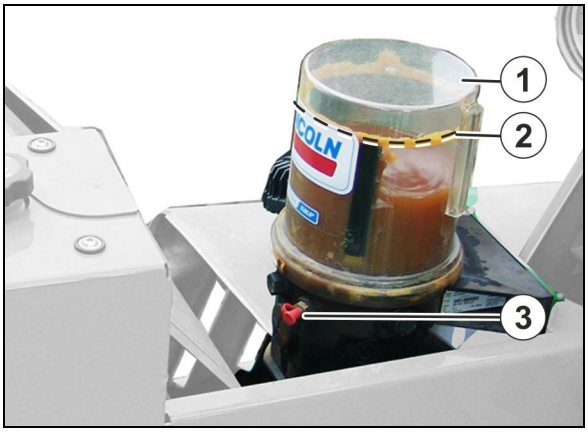

(1) Lubricant tank

(2) Connection for refilling

(3) Maximum filling level

- Fill the tank of the central lubricating unit in due time.
- Operate the central lubrication via the AmaDrive

14.7 Maintenance of the carrier vehicle

- Self-adhesive maintenance images for the diesel engine are supplied with each machine. Stick these on the machine at locations that are well visible.
- Please also observe the instruction manual for the Deutz engine.
- Have all maintenance work carried out on the engine by Deutz authorised dealers.

14.7.1 Oils and operating fluids

Mix other brands only upon request. A written confirmation of the supplier when using other oils is required in order to guarantee that no malfunctions occur.

The guarantee of the machine voids immediately when using other oils that specified!

Filling quantities of the operating fluids

Component	Designation		Fill-in quantity
Deutz engine	Engine oil		approx. 15.5 l
	Cooling agent		approx. 38 l
Hydraulic system	Hydraulic oil	Hopper	approx 120 l
		Overall system	approx. 180 l
Wheel gears	Wheel transmission oil		approx. 1.2 l
Air conditioner	Coolant		1900 g
	Contrast medium		10 g
	Compressor oil		5 g
Spraying pumps (CP2)	Engine oil 15W40		each 1,3 l

Oils

Engine oils	
	Deutz quality class: Engine oils of the following quality classes are permitted: • DQC III LA • DQC IV LA (LA = Low Ash) **Viscosity class:** Select the viscosity class depending on the ambient temperature. **Standard:SAE 10W/40 (ambient temperature of -20°C to 40 °C)**

Hydraulic oils		
HVLP 46	Finke	AVIATICON HV 46
HVLP 46	Viscosity index ≥ 150	

Fill only cleaned hydraulic oil. Required purity class:

- 9 according NAS 1638
- 18 /16/ 13 according ISO 4406/1999

Admissible oils for the wheel transmission

Ambient temperature

- from -20°C to 30 °C: SAE 80 W/90
- from 10°C to 45 °C: SAE 85 W/140

Wheel transmission			
	EP oil MIL-L-2105 C or API GL5 Viscosity: SAE 80 W/90		
	Brands (Examples)	**mineral**	**synthetic**
	Shell	Spirax A	Transaxle 75W90
	Agip	Rotra MP 80W90	GearSynth 75W90
	Aral	EP Plus 80W90	Hyp Syn 75W90
	BP	Energear Hypo 80W90	Energear SHX-M 75W90

Protective agent for cooling systems	Brand	Designation
	Deutz AG	TN 0101 7990 (5 litres) TN 0101 7991 (20 litres)
	ARAL	Antifreeze Extra
	AVIA	Antifreeze APN
	BASF	Glysantin G48 Protect Plus
	Mobil	Mobil Antifreez Extra
	Shell	GlycoShell
	Castrol	Castrol Antifreeze NF
	TOTAL	Glacelf MDX

14.7.2 Cleaning the engine cooler and air conditioning condenser

Clean the radiator and the condenser to the left and right side of the cabin using compressed air.

1. Remove the side cover.
2. Pull the grille outwards.
3. Clean the radiator and the condenser to the left and right side of the cabin using compressed air.
4. If necessary, clean the grille separately.

Compressed air, maximum 5 bar!

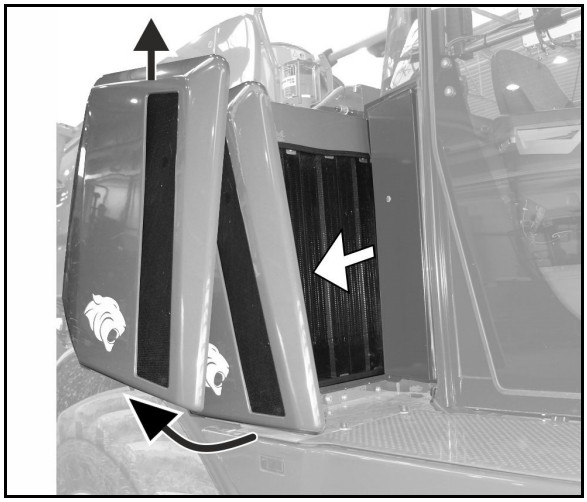

14.7.3 Air intake system of the engine

The air intake system is located on the left side behind the long maintenance flap.

(1) Dry air filter

(2) Dust discharge valve

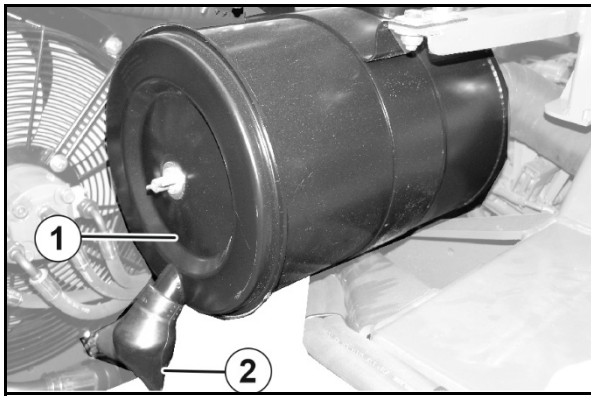

14.7.4 Cooling system of the engine

The expansion tank (1) for coolant is located on the platform of the machine.

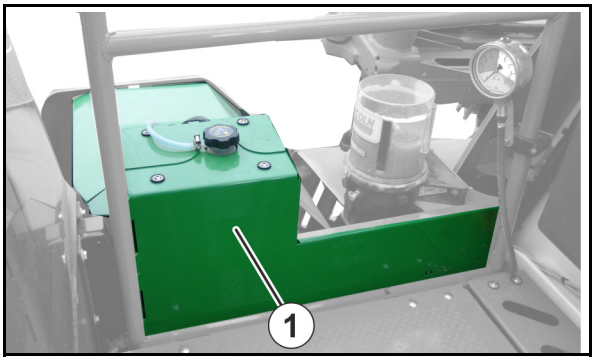

14.7.5 Wheel gears

The reduction gear unit that is a planetary gear is coupled via a coupling part on the wheel motors.

The maintenance is limited to an initial oil change after 100 operational hours and then every 1000 operational hours!

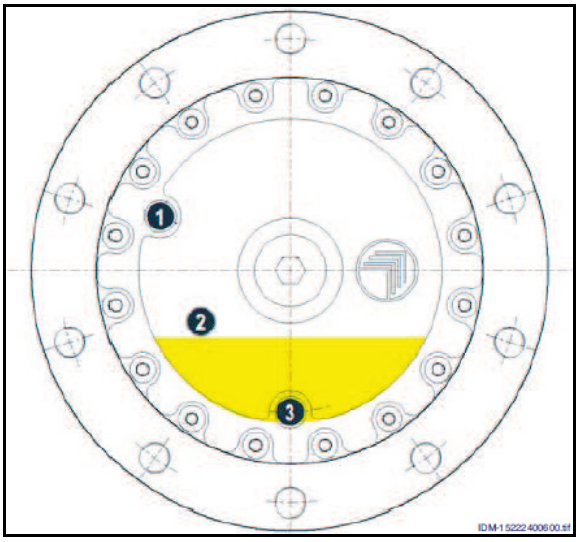

(1) Filling opening

(2) Oil level monitoring opening

(3) Drain opening

Oil level check:

1. Position the machine so that **the drain plug is at the bottom.**
2. Remove the oil level plug.

→ The oil level should be up to the oil level monitoring opening.

Oil change:

- Required amount of oil: ~ 1.2 l
- Change the oil using warm oil!

1. Park the machine so that the drain plug is at the bottom.
2. Remove filler plug, oil level plug and drain plug.

→ Collect the oil draining out.

3. Refit the drain plug.
4. Fill in oil through the filling opening until it reached the oil level monitoring opening.
5. Screw the bolts back in.
6. Carry out several rotations of the gearbox and check the filling level again.

Always consult your technical professional in the event of malfunctions in the wheel drives.

14.7.6 Tyres / wheels

1. Check bolted connection.
2. Check and adjust the tire pressure according to the specifications on the sticker on the rim.
3. Check the tires for damage and firm seat on the rim.

- **Required tightening torque for wheel nuts or bolts: 510 Nm**
- **Tyre pressure, see Seite 49.**

After tightening the wheel nuts, remount the protective caps.

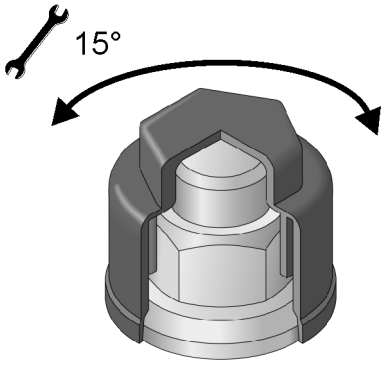

Use of twin tyres is not permitted.

- Only use the tyres and wheels which we have specified (see page Seite 49).
- Repair work on tyres must only be carried out by specialists using suitable assembly tools.
- Tyre fitting requires sufficient skills and proper assembly tools.

- **When working on the running gear , the jack may only be positioned under the marked lifting points (MD101).**
- **The minimum load bearing capacity must be 5 tons.**
- **Use a car lifter with U-shaped recording in the marked places!**

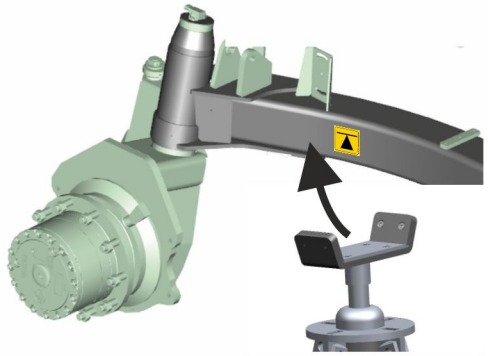

Replacing the wheels with another offset depth

The offset depth influences the track width of the machine.

The wheels used must be entered for the correct display of the track width on the AMADRIVE.

→ The minimum track width must be no less than 1800 mm. Otherwise, the wheels will collide with the running gear and there is a risk of tipping.

Fitting tyres

- Remove any instances of corrosion from the wheel rim seating surfaces before fitting a new / another tyre. Corrosion can cause damage to the wheel rims when the vehicle is in operation.
- When fitting new tyres, always use new valves for tubeless tyres or new inner tubes.
- Always fit the valves with valve caps which have a gasket insert.

14.7.7 Brakes

WARNING

- **Repair and adjustment work on the service braking system should only be carried out by trained specialist personnel.**
- **Special care is required for welding, torch cutting and drilling work in the vicinity of brake lines.**
- **Always perform a braking test after any adjusting or repair work on the braking system.**
- **Bleed the brake system after each brake repair for which the system has been opened.**

The brake is actuated via the machine's hydraulic fluid.

Checking the brake system

- Check all flexible brake hoses for wear.
- Check all brake lines for damage.
- Check all bolted connections for tightness.
- Check the dust collars for damage.
- The joints on brake valves, brake cylinders and brake linkages must be able to move freely. Lubricate or oil lightly if necessary.
- Renew any worn or damaged parts.

Changing the brake pads

Changing the brake pads should only be performed by an authorized repair shop!

Perform a brake test following all work on the brakes.

- The braking distance from a speed of 40 km/h should be between 18 m and 24 m.
- The machine must not pull to one side when braking.
- Minimum thickness of brake pads: 3 mm.
- Change all the brake pas on one axle respectively.
- When changing the brake pads, check the brake discs for grooves and disc thickness.

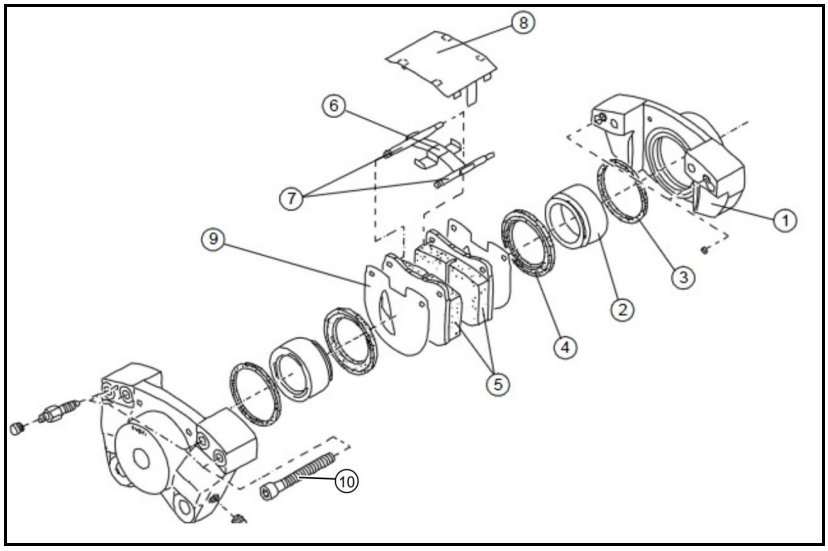

(1) Brake disc half

(2) Piston

(3) Sealing ring

(4) Dust cap

(5) Brake pad

(6) Cross spring

(7) Lock pin with split pin

(8) Cover sheet

(9) Insulation sheet

WARNING
The calliper screw joint must not be loosened under any circumstances!

1. Undo the lock pins.
2. If available: Drive out the split pins.
3. Remove the safety clips.

→ Caution: The sprung plate can jump out.

4. Remove the brake pads and shims.
5. Clean the brake caliper with white spirit (oily cleaning agents prohibited).
6. Press the brake piston back into the housing.
7. Carry out installation in the reverse order.

→ Caution:

- Recesses on the shims must be on the entry side of the disc.
- Install the split pins on the lock pins with the slit pointing downwards.

8. Carry out a braking test, beforehand press the brake pedal several times while stationary.

(1) Direction of rotation

(2) Recess

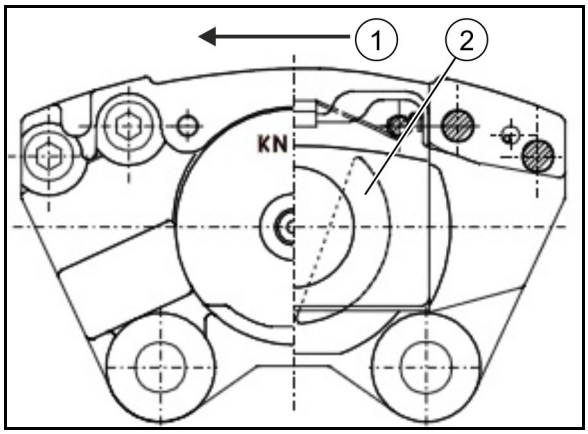

Seal replacement

If there are any leaks, use complete seal sets / repair sets.

If necessary also replace the dust caps.

14.7.8 Compressed air system for trailer brake

The compressed air system for the trailer brakes is located under the cab behind the right-hand maintenance flap.

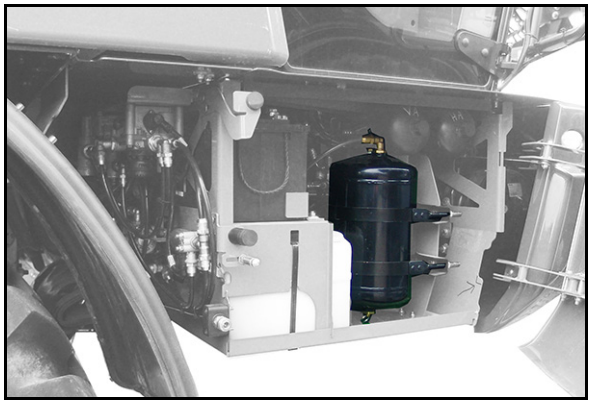

Draining the air reservoir

There are three air reservoirs.

Open the drainage valve using the ring until no more water escapes from the air reservoir.

Checking the compressed air system

Check the overall compressed air system for proper function, tightness, and wear.

Replacing the air drier cartridge

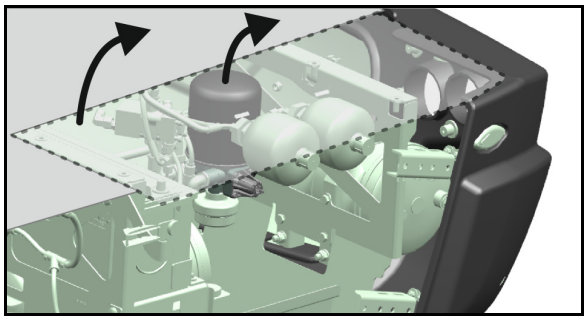

1. Depressurise all compressors through the condensate drain.
2. Remove the cover.
3. Release the air drier cartridge and remove it moving upwards.
4. Install a new air drier cartridge from the top.

14.7.9 Hydraulic system

WARNING

Risk of infection through the high pressure hydraulic fluid of the hydraulic system entering the body.

- Only a specialist workshop may carry out work on the hydraulic system.
- Depressurise the hydraulic system before carrying out work on the hydraulic system.
- When searching for leak points, always use suitable aids.
- Never attempt to plug leaks in hydraulic hose lines with your hand or fingers.

  Escaping high pressure fluid (hydraulic fluid) may pass through the skin and ingress into the body, causing serious injuries.

  If you are injured by hydraulic fluid, contact a doctor immediately. Risk of infection

- When connecting the hydraulic hose lines to the hydraulic system of connected machines, ensure that the hydraulic system is depressurised on both the drawing vehicle and the trailer.
- Ensure that the hydraulic hose lines are connected correctly.
- Regularly check all the hydraulic hose lines and couplings for damage and impurities.
- Have the hydraulic hose lines checked at least once a year by a specialist for proper functioning.
- Replace the hydraulic hose line if it is damaged or worn. Only use genuine AMAZONE hydraulic hose lines.
- The hydraulic hose lines should not be used for longer than six years. This period includes any storage time of a maximum of two years. Even with proper storage and approved use, hoses and hose connections are subject to natural ageing, thus limiting the length of use. However, it may be possible to specify the length of use from experience values, in particular when taking the risk potential into account. In the case of hoses and hose connections made from thermoplastics, other guide values may be decisive.
- Dispose of old oil in the correct way. If you have problems with disposal, contact your oil supplier.
- Keep hydraulic fluid out of the reach of children!
- Ensure that no hydraulic fluid enters the soil or waterways.

Labelling hydraulic hose lines

Valve chest identification provides the following information:

(1) Manufacturer's marking on the hydraulic hose line (A1HF)

(2) Date of manufacture of the hydraulic hose lines (02 04 = February 2004)

(3) Maximum approved operating pressure (210 BAR).

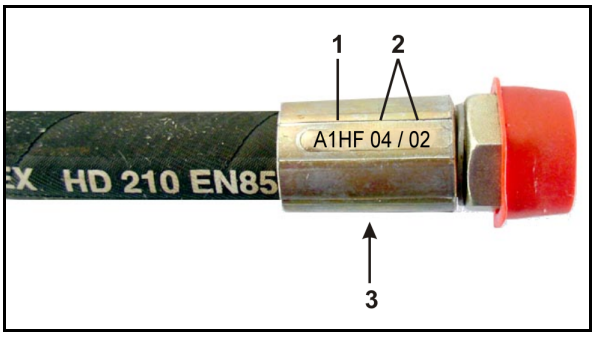

Maintenance intervals

After the first 10 operating hours, and then every 50 operating hours

1. Check all the components of the hydraulic system for tightness.
2. If necessary, tighten screw unions.

Before each start-up:

1. Check the hydraulic hose lines for visible damage.
2. Repair any areas of chafing on hydraulic hose lines and pipes.
3. Replace any worn or damaged hydraulic hose lines immediately.

Inspection criteria for hydraulic hose lines

For your own safety and in order to reduce pollution, ensure the following inspection criteria.

Replace hoses if the respective hose fulfils at least one of the following criteria:

- Damage to the outer layer up to the ply (e.g. scouring points, cuts, cracks).
- Brittleness of the outer layer (crack formation of the hose material).
- Deformations which do not match the natural shape of the hose. Both in a depressurised and pressurised state or when bent (e.g. layer separation, bubble formation, pinching, bends).
- Leak points.
- Damage or deformation of the hose assembly (sealing function restricted); minor surface damage is not a reason for replacement.
- Movement of the hose out of the assembly.
- Corrosion of assembly, reducing the function and tightness.
- Installation requirements not complied with.
- Life span of 6 years has been exceeded.

  The date of manufacture of the hydraulic hose line on the assembly is decisive for determining these six years. If the date of manufacture on the assembly is "2004", then the hose should not be used beyond February 2010. See also "Labelling of hydraulic hose lines".

Installation and removal of hydraulic hose lines

When installing and removing hydraulic hose lines, always observe the following information:

- Use only genuine AMAZONE replacement hoses.
- Ensure cleanliness.
- You must always install the hydraulic lines so that, in all states of operation:
  - There is no tension, apart from the hose's own weight.
  - There is no possibility of jolting on short lengths.
  - Outer mechanical influences on the hydraulic hose lines are avoided.

    Use appropriate arrangements and fixing to prevent any scouring of the hoses on components or on each other. If necessary, secure hydraulic hose lines using protective covers. Cover sharp-edged components.
  - The approved bending radii may not be exceeded.
- When connecting a hydraulic hose line to moving parts, the hose length must be appropriate so that the smallest approved bending radius is not undershot over the whole area of movement and/or the hydraulic hose line is not overtensioned.
- Fix the hydraulic hose lines at the specified fixing points. There, avoid hose clips, which impair the natural movement and length changes of the hose.
- The coating of hydraulic hose lines is not permitted.

14.7.10 Hydraulic oil

Correct oil level at oil temperature

- 60° Celsius – Centre inspection glass
- 20° Celsius – lower third of inspection glass

The oil quantity is correct when the oil level is located

- at the lower third (cold oil),
- up to the middle

of the inspection glass.

Where required, oil can be refilled through a filling opening on the top side of the tank.

If the oil level falls below the minimum measurement or the oil temperature increases too high, a warning signal is output in the cabin.

Fig. 4

Oil change:

1. Stop the engine, allow the hydraulic oil to cool sufficiently so that there is no risk of burns.
2. Place an oil drip pan under the hydraulic tank.
3. Unscrew the oil drain screw on the bottom side of the tank.
4. Drain the oil.
5. Screw in the oil drain plug with a new seal and tighten.
6. Fill up the hydraulic fluid.
   - Details for quality / viscosity, see Seite 218.
   - Filling quantity 120 litres.
   - The inspection glass is decisive for the filling quantity.
7. Check the oil level.

CAUTION

Risk of scalding when draining due to hot oil!

Hydraulic oil filter

- Changing the hydraulic oil filter can be carried out when the hydraulic oil tank is filled.
- Collect any possible escaping oil.
- Risk of scalding when draining due to hot oil!

Return filter in the oil tank

The return filter is located in the filling opening of the hydraulic oil tank.

Changing the filter:

1. Remove the cover (1) from the housing (3).
2. Replace the return filter (2).
3. Refit the cover.

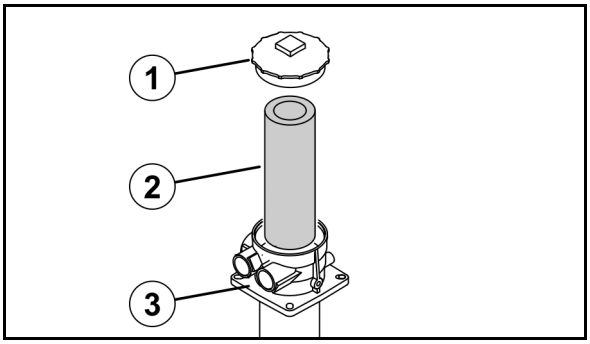

Hydraulic pump pressure filter

The pressure filter is located at the right on the hydraulic pump (1).

Changing the filter:

1. Turn off the engine.
2. Undo the lubricating oil filter cartridge using standard commercial tools and unscrew it.
3. Collect any possible escaping oil.
4. Clean the sealing surface of the filter support from any dirt.
5. Screw in the cartridge by hand until the seal rests.
6. Tighten the lubricating oil filter cartridge by another half a turn.
7. Check the seal of the lubricating oil filter again for leaks.

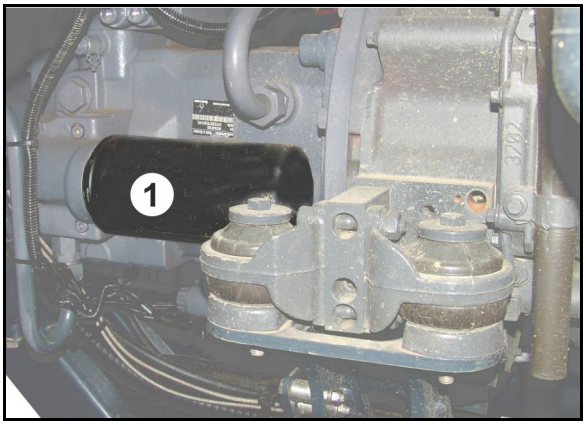

14.7.11 Cab

WARNING

Air filter installed incorrectly or a defective filter. Dust enters the cabin. Dust is inhaled and causes health problems.

- Make sure the filter has a tight fit.
- Replace defective air filters immediately.

14.7.11.1 Check door seals, window seals, and cable glands

Doors, windows, and cable glands must be adequately sealed to prevent dusts, aerosols, and fumes from penetrating into the cab.

Replace defective seals.

14.7.11.2 Cleaning / changing the cab air filter

1. Open the cover (1) on the cabin roof, left side.
2. Unlock the filter (2), take out and replace.
3. Replace damaged filters and sealing profiles in all cases.

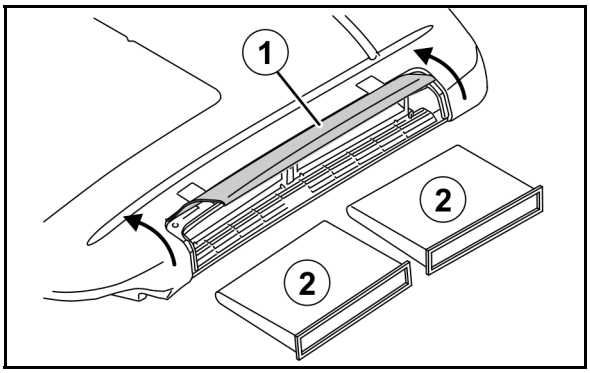

14.7.11.3 Clean the cabin circulation filter

1. Remove the circulating air grille (1).
2. Vacuum clean, knock or blow-out filters with soiling on the surface with compressed air.
3. Renew damaged filters.
4. Install the circulating air grille.

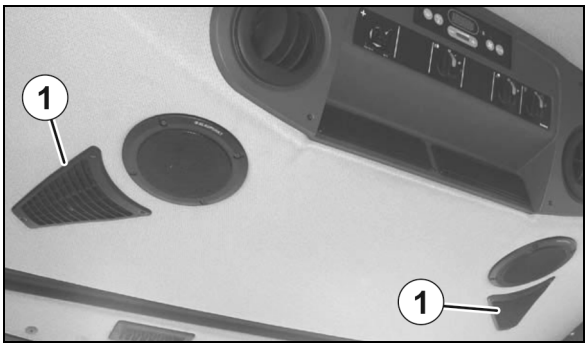

1. Remove the circulating air grille (1).
2. Vacuum clean, knock or blow-out filters with soiling on the surface with compressed air.
3. Renew damaged filters.
4. Install the circulating air grille.

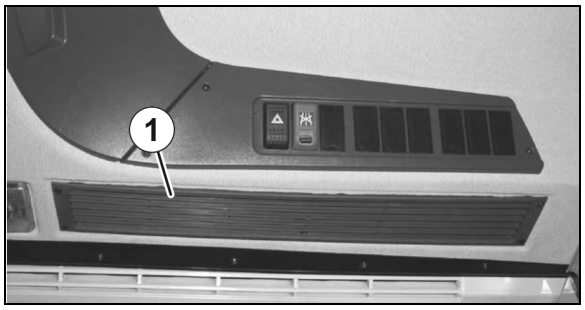

14.7.11.4 Cab air filtration of the Category 4 safety status

WARNING

Health risk from breathing in the filtered particles or skin contact!

When working on the opened filter housing, wear respiratory protection, protective gloves and suitable protective clothing.

- Clean the inside of the filter housing before installing a new filter!
- Do not use a high-pressure cleaner to clean the filter housing!
- Do not install damaged filters!
- Install the filter in the direction of flow!

The arrow indicated the direction of flow. Only works properly when the shown sequence is observed!

- For operation according to Category 4, it is necessary to replace the frame by the activated carbon filter 00 0536 555 0, which is supplied separately wrapped in an air-tight package in the initial delivery.
- Only open the packaging of the activated carbon filter when it going to be used.
- Do not used an activated carbon filter if the packaging is damaged or the date of opening is not known.

(1) Activated carbon filter

(2) Aerosol filter

(3) Dust filter

Arrow = Direction of flow

Insert the activated carbon filter at the last position in front of the fan compartment.

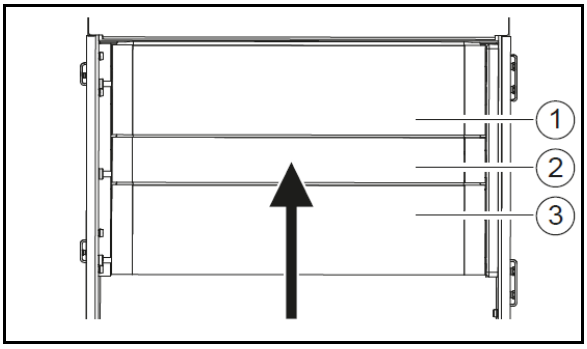

The delivery includes a packaged filter set, consisting of the housing with the inserted filters as well as a sealed activated carbon filter according to DIN EN 15695-2 for Category 4 operation.

- If the warning light is illuminated at the maximum fan level, the external air filters are fully loaded.
- If the pressure display still signalises insufficient positive pressure in the cab, install new filter elements.
- If the warning light is illuminated permanently despite installing new filter elements, check the cab and the air ducts for leaks.

Changing the filter

WARNING

Hazards due to accidental contact with dusts, aerosols, and fumes!

- Only use marked filters that are approved in accordance with EN 15695-2.
  - Cab Category 4: CAT4 EN 15695-1:2017
- Only use filters that are specified as possible protection against crop protection products, on the label of the crop protection product.

Regardless of the machine's operational hours, the following service intervals apply:

- Filter change for activated carbon filter every 3 months (Category 4 operation)
- Filter change for dust aerosol every 6 months

Only perform checks and filter changes outside of the contaminated area and when the ignition is deactivated. Wear protective gloves.

1. Disconnect the central connector on the housing to interrupt the power supply.
2. Clean the filter inlet housing with a moist cloth after removing the used filter.
3. Check the housing and seals for damage.
4. Insert a new filter.
5. Ensure that the filter is properly inserted to ensure a complete seal.

6. Ensure that the housing lid is properly positioned.
7. Ensure that the sequence of the filter elements is observed.
8. After changing the filter, run the cab air filtering at the lowest level.

14.7.11.5 Check the damping bearings of the cabin for their correct fit

(1) Four damping bearings

(2) Damping bearing screw connection

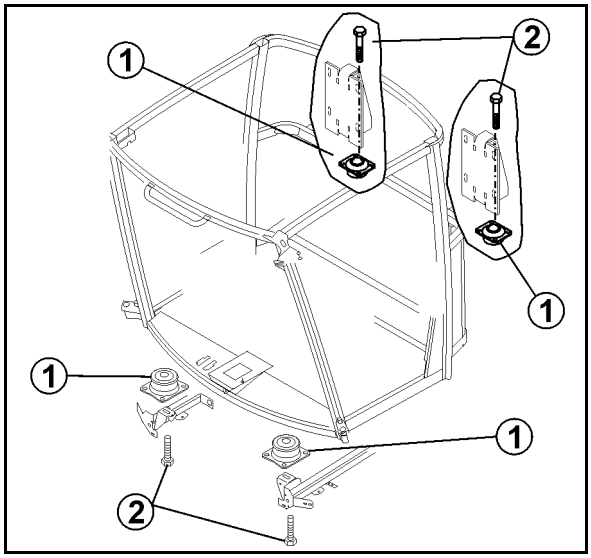

14.7.12 Air conditioner

14.7.12.1 Put the air conditioning system into operation

In order to prevent damage to the compressor with machines fitted with air conditioner, the air conditioner should be put back into operation after longer standing times.

The commissioning makes sure that the oil is distributed in the air conditioner.

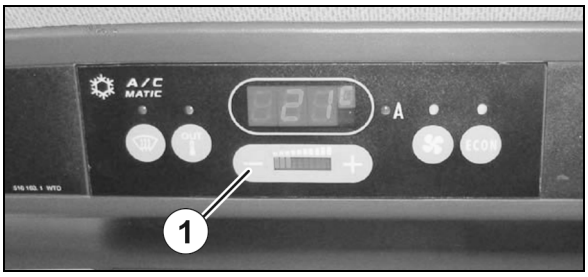

1. Switch on the diesel engine and run in idle speed.
2. Open all fan jets completely.
3. Open both doors.
4. Switch on the air conditioner.
5. Set the temperature controller (1) to the lowest temperature.
6. Blower to level 3 or automatic mode.
7. Allow the machine to run for minimum 5 minutes at idle speed.

The air conditioning system can now be operated as normal.

14.7.12.2 Working with refrigerant

DANGER

Death or severe injuries resulting from refrigerant.

Work on the air conditioning system may only be carried by an authorised workshop.

- Avoid any contact with the refrigerant.
- Wear protective gloves and protective goggles.
- No welding tasks may be carried out on the refrigerant circuit and in their immediate vicinity.
- Maximum ambient temperature for refrigerant: 80° Celsius

14.7.12.3 Replace the filter drier

- The filter drier is located on the left in front of the diesel engine.
- When installing a new filter drier, refill with 10 cm³ refrigerant oil.
- Renew the seal with each assembly.

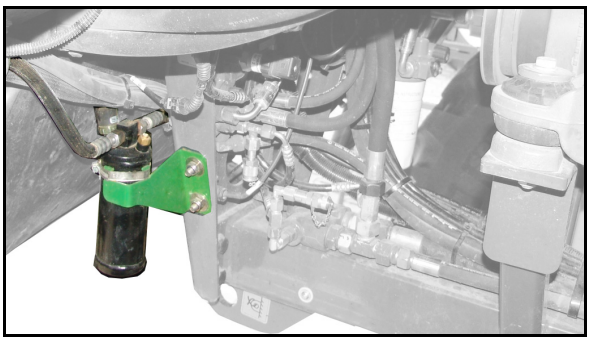

Removing

1. Drain the refrigerant.
2. Unlock and remove the connector from the switch.
3. Unscrew the hose line.

   Seal the opening tight.
4. Remove the filter drier.

Installation

1. Mount the filter drier.
2. Screw on the hose line.
3. Plug the connector onto the switch.
4. Fill with refrigerant.
5. Perform functional check.
6. Perform leak test.

14.7.12.4 Air conditioning system filling quantity

- Coolant: 1900 g
- Contrast agent: 10 g
- Compressor oil: 5 g

Dispose of all replaced components of the air conditioning system correctly.

14.7.12.5 Air conditioning unit in the cabin roof

Soiled units lead to reduced heating and cooling performance. Uneconomical use of the machine.

- Observe prescribed maintenance intervals.
- With extensive dust accumulation, clean the unit more frequently.

CAUTION

Clean sensitive components with stronger compressed air or other cleaning devices. Components will be damaged.

- **Do not hold the compressed air jet close to sensitive components, such as cooling ribs or filter inserts.**
- **Never use a steam-jet cleaning device for cleaning.**

1. Unscrew the hood (1) from the cabin roof.
2. Blow out the evaporator (2) and warm water radiator (3) with compressed air (maximum 5 bar).
3. Renew damaged seals (1) under the cover.
4. Remount and screw on the hood.

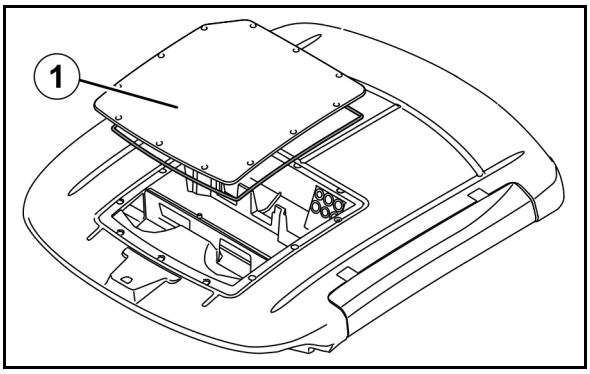

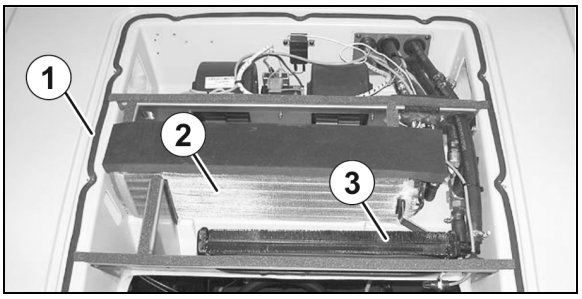

14.7.12.6 Charging the battery

The battery is located under the cab behind the right-hand maintenance flap.

- The battery is maintenance free.
- If the battery has to be charged using a quick charger, first remove the pole terminals.

14.8 Maintenance the field sprayer

14.8.1 Settings on the unfolded sprayer boom

Alignment parallel to the ground

When the sprayer boom is unfolded and correctly adjusted, all of the spraying nozzles must have the same parallel distance from the ground.

If this is not the case, align the unfolded sprayer boom using counterweights (1) with the vibration compensation **unlocked**. Attach the counter-weights accordingly on the boom.

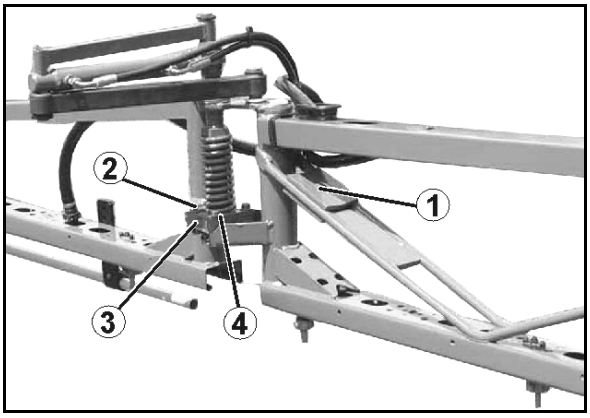

Horizontal alignment

In the direction of travel, all of the boom sections of the sprayer boom must be aligned. Horizontal alignment can be necessary

- after long periods of operation
- or rough ground contact of the sprayer boom.

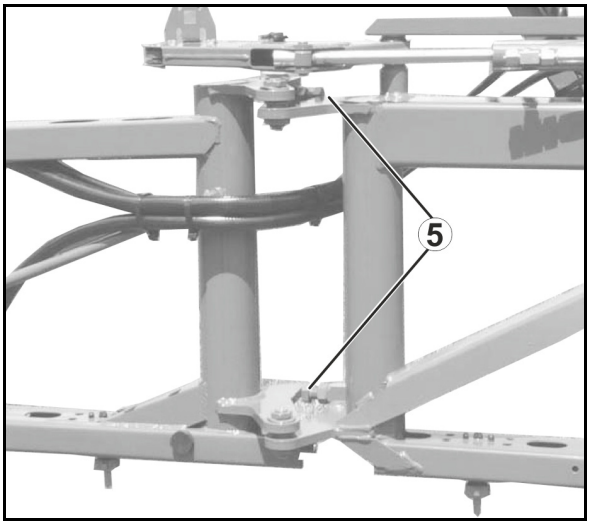

inner boom

1. Loosen the lock nut of the adjusting screw (5).
2. Turn the adjusting screw against the stops until the inner boom section is aligned with the centre part of the boom.
3. Tighten the lock nut.

Outer boom section

1. Loosen the bolts (2) for the fastening lug (3). Alignment is carried out right on the plastic jaw
   (4) using the elongated slots of the fas-tening lug.
2. Align the boom section.
3. Tighten the bolts (2).

14.8.2 Electro hydraulic boom

WARNING

Risk of injury due to accidental movement of the sprayer boom in automatic mode when entering the radiation area of the radar sensor.

Lock the sprayer boom

- Before leaving the tractor.
- If unauthorised persons are standing in the area of the sprayer boom.

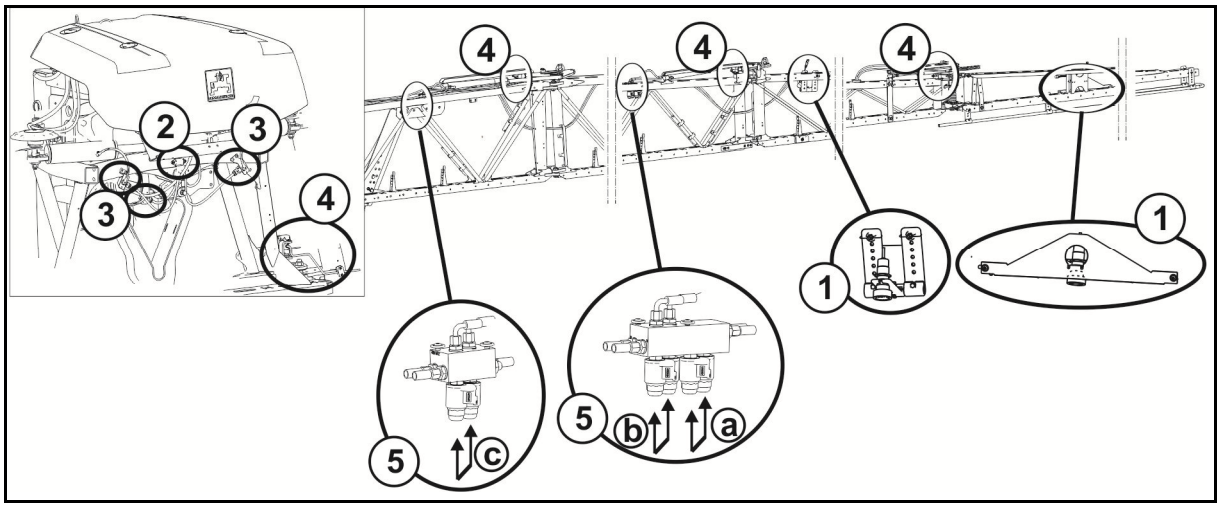

(1) Ultrasound sensors for boom tilt

(2) Yaw rate sensor for boom tilt

(3) Potentiometer for boom tilt

(4) Potentiometer for boom folding

(5) Hydraulic block with manual emergency folding function

Emergency folding function for the outer boom sections

In case of defective wiring harness, the boom sections can be hydraulically folded by manual actuation of the hydraulic block (5a, b, c).

→ Control terminal is switched on, oil circulation is active.

- Press the button on both solenoids 5a: outer boom section is folded.
- Press the button on both solenoids 5b: 2nd boom section from the outside is folded.
- Press the button on both solenoids 5c: 3rd boom section from the outside is folded.

Emergency folding with intact electronics:

See ISOBUS operating manual / settings / implement.

14.9 Pumps

WARNING

Hazards due to accidental contact with spray liquid!

Clean the machine with flushing water, before dismounting the spray pump or other components that come into contact with aerosols or spray liquid.

Installation and removal of the spraying pump is a workshop task.

When installing the pump, the hose connections must be mounted such that they are mounted pressure-sealed.

If spray liquid emerges from the pump, stop spraying and contact your dealer.

14.9.1.1 Check the oil level

- Only use branded oil or multi-purpose oil 15W40!
- Check that the oil level is correct! Damage may be caused both by the oil level being too low or too high.
- Foam generation and cloudy oil are signs of a faulty pump membrane.
  Do not run a defective pump.

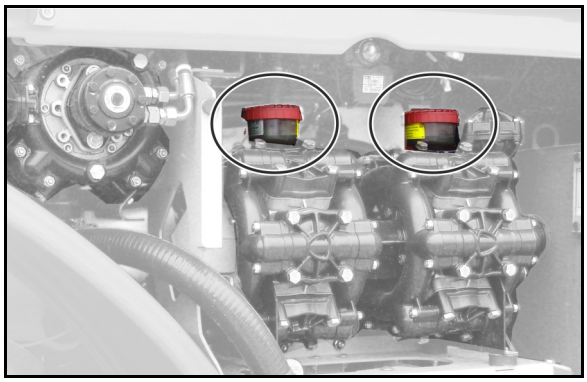

1. Check whether the oil level is visible at the mark with the pump not running and standing on a level surface.
2. Check whether the oil is clear.
3. If the oil level is not visible at the mark, remove the lid and top up with oil..

14.9.1.2 Changing the oil

- After a few operating hours, check the oil level; top up if necessary.

1. Remove the pump.
2. Remove the cover.
3. Drain the oil.
   3.1 Turn the pump on its head.
   3.2 Rotate the drive shaft by hand until the used oil has all run out.

   The option also exists to drain the oil from the drain plug. However, with this procedure a slight oil residue remains in the pump; we therefore recommend the first approach.
4. Place the pump on an even surface.
5. Turn the drive shaft left and right alternately and slowly fill with new oil. The right quantity of oil has been reached when the oil is visible at the mark (1).

14.9.2 Checking and replacing the suction and pressure-side valves (workshop work)

- Pay attention to the respective installation position of the valves on the suction and pressure sides before removing the valve group (5).
- When reassembling, ensure that the valve guide (9) is not damaged. Damage may cause the valves to jam.
- Always tighten the nuts (1,2) crosswise using the specified torque. Improper tightening of the nuts causes warping, which results in leaks.

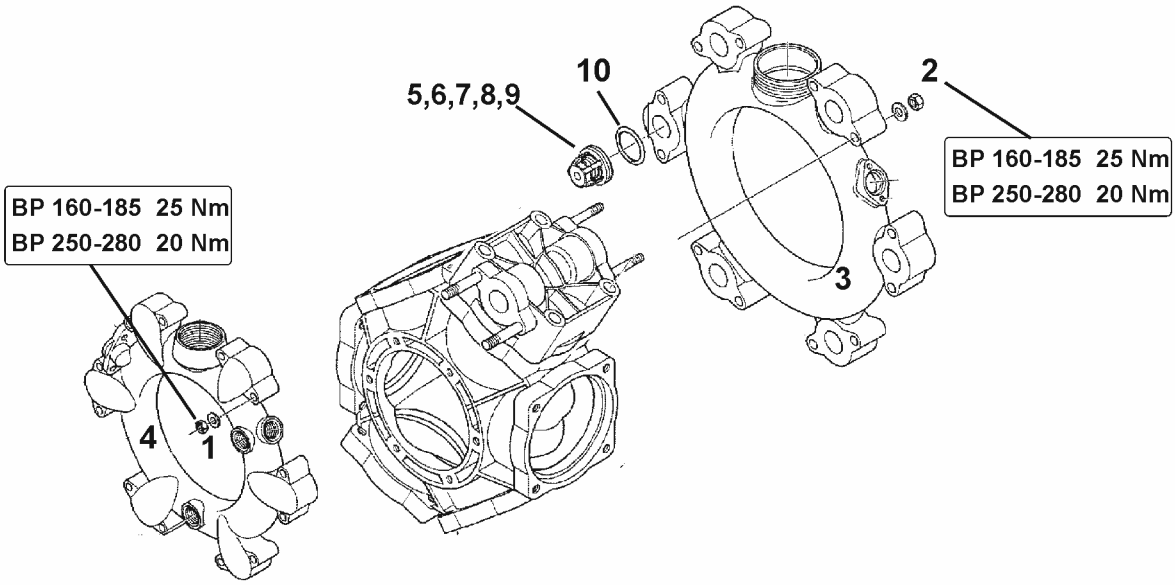

1. If necessary, remove the pump.
2. Remove the nuts (1,2).
3. Remove the suction and pressure port (3 and 4).
4. Remove the valve groups (5).
5. Check the valve seat (6), valve (7), valve spring (8) and valve guide (9) for damage or wear.
6. Remove the O-ring (10).
7. Replace defective parts.
8. Fit the valve groups (5) after testing and cleaning.
9. Insert new O-rings (10).
10. Mount the suction (3) and pressure port (4) on the pump housing.
11. Tighten the nuts (1,2) crosswise using a torque of **25 Nm (BP 160-185) / 20 Nm (AR 250-280)**.

14.9.3 Checking and replacing the piston diaphragm (workshop work)

- At least once a year, check that the piston diaphragm (8) is in perfect condition by removing it.
- Pay attention to the respective installation position of the valves on the suction and pressure sides before removing the valve group (5).
- Check and replace the piston diaphragm for each piston individually. Only remove the next piston in sequence after the currently removed piston has been completely checked and refitted.
- Always swivel the piston to be checked upwards so that the oil in the pump housing does not run out.
- As a rule, replace all piston diaphragms (8) even if only one piston diaphragm is distorted, punctured or porous.

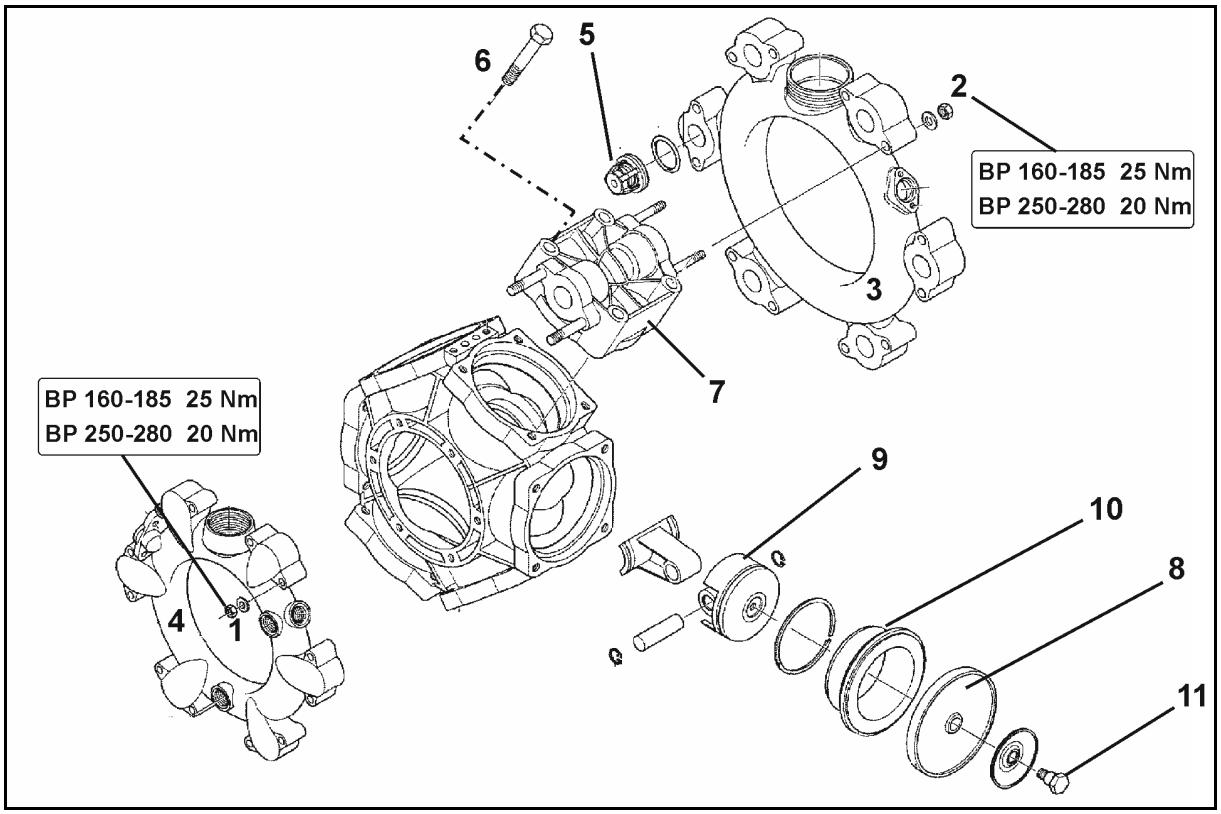

Checking the piston diaphragm

1. If necessary, remove the pump.
2. Unscrew the nuts (1, 2).
3. Remove the suction and pressure port (3 and 4).
4. Remove the valve groups (5).
5. Remove the bolts (6).
6. Remove the cylinder head (7).
7. Check the piston diaphragm (8).
8. Replace the damaged piston diaphragm.

Replacing the piston diaphragm

- Ensure the correct position for the recesses and/or holes on the hydraulic cylinders.
- Secure the piston diaphragm (8) with a washer disc and a bolt (11) on the piston (9), so that the rim shows on the cylinder head side (7).
- Always tighten the nuts (1,2) crosswise using the specified torque. Improper tightening of the nuts causes warping, which results in leaks.

1. Loosen the bolt (11) and remove the piston diaphragm (8) together with the holding washer from the piston (9).
2. If the piston diaphragm has been punctured, drain the oil/spray liquid mixture from the pump housing.
3. Remove the hydraulic cylinder (10) from the pump housing.
4. Clean the pump housing by flushing it thoroughly with diesel oil or paraffin.
5. Clean all sealing faces.
6. Insert the cylinder (10) back into the pump housing.
7. Fit the piston diaphragm (8).
8. Align the cylinder head (7) on the pump housing and tighten the bolts (6) evenly in a crosswise fashion.

   Use thread lock for medium-fixed connections!
9. Fit the valve groups (5) after testing and cleaning.
10. Insert new O-rings.
11. Mount the suction (3) and pressure port (4) on the pump housing.
12. Tighten the nuts (1,2) crosswise using a torque of **25 Nm (BP 160-185) / 20 Nm (AR 250-280)**.

14.10 Checking hoses that convey spray liquid

Replace hoses that convey spray liquid as soon as one of the following damage criteria is met:

- Cracks
- Chafing points
- Bulges
- Kinks

1. Clean the implement's liquid circuit with flushing water.
2. Depressurize hoses that must be replaced.
3. Replace hoses and mount the hose connections such that they are pressure-tight.

14.11 Calibrate the flow meter

- **Calibrate the flow meter at least once a year.**
- **Calibrate the flow meter:**
  - **after removing the flow meter.**
  - **After long periods of operation, because spray residue deposits can form in the flow meter.**
  - **If differences occur between the required spray rate and the actual spray rate.**
- **Note the displayed "Impulse" value when you drive the field sprayer away from your location for determining the amount of water applied. The impulse value displayed lapses when transporting the field sprayer.**
- **Compare the flow meter with the flow meter at least once a year.**
- **Calibrate the flow meter with the return flow meter at the following times:**
  - **after calibrating the flow meter.**
  - **After removing the return flow meter.**
- **Move-out in work menu "Sprayer". The comparison can only be carried out when no fluid is used via the boom.**

Pay attention to the operating instructions for the control terminal; Chapter Pulses per litre.

14.12 Eliminating limescale in the system

Indications that there may be lime deposits:

- The nozzle body does not open or close.
- Error messages on the control terminal

DANGER
Health risk due to contact with acidification agents.

Observe the instructions for use on the packaging!

1. Completely clean the empty sprayer.
2. Fill 20 to 50 litres of flushing water into the spray liquid tank.
3. Start the spraying pump.
4. Pour the acidification agent (3 l) into the spray liquid tank through the inspection hatch.

→ Target pH-value for descaling: 2 - 3

5. Allow the mixture to circulate in the spray line for 10-15 minutes.
6. Interrupt the pump drive.
7. **AmaSelect**: Without pump drive, use the manual nozzle selection to switch through all nozzle positions several times.
8. Start the spraying pump.
9. Allow the mixture to circulate in the spray line for a few more minutes.
10. Dilute the mixture with water until the target pH-value of 6 - 7 has been reached.

→ The diluted mixture is harmless and can be used to prepare the spray liquid.

Basic information about water hardness and pH-value

Especially for treatments with trace elements and fertiliser additions, attention must be paid to the water hardness and the pH-value to ensure clean surfaces and smooth functioning of all valves.

At a water hardness greater than 15° dH (German water hardness), we recommend the use of polyphosphate-based hardness stabilisers. When complying with the manufacturer specifications, the products are safe for health and the environment.

Product example: Folmar P30 from Aquakorin.

Particularly with crop protection product mixtures with trace elements such as boron, which increase the pH-value, the pH-value of the ready-to-use spray liquid should be kept below </= 7.

Product example:

- Citric acid
- Acidifying agents, such as:
  - pH-Fix from Sudau
  - Spray Plus from Belchim Crop Protection
  - X-Change from De Sangosse

Commercial sprayer cleaning agents are strongly alkaline and therefore neutralise crop protection product residues such as sulphonylurea in the sprayer. In case of limescale in the implement, however, they increase the pH-value and are therefore counterproductive for descaling.

14.13 Metering the field sprayer

Test the field sprayer by metering

- **before the start of the season.**
- **each time the nozzles are changed.**
- **to check the setting information in the spray tables.**
- **in the case of deviations between the actual and required application rate [l/ha].**

Observed deviations between the actual and required application rate [l/ha] can be caused by:

- the difference between the actual forward speed and that indicated on the tractor meter and/or
- natural wear to the spraying nozzles.

Accessories required for metering:

(1) Quick-check cup

(2) Stopwatch

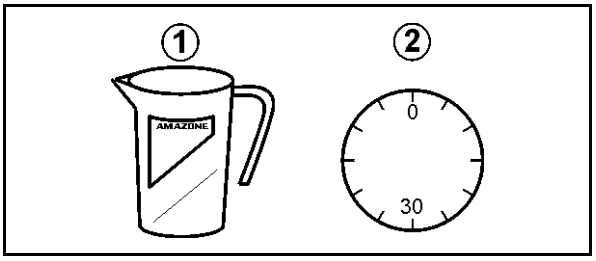

Determining the actual application rate while stationary via the individual nozzle output

Determine the nozzle output on at least 3 different nozzles. To do so, check one nozzle on the left and right boom section respectively, and one in the middle of the sprayer boom, as follows.

1. Control terminal:

   1.1 Enter the value for the required application rate on the control terminal.

   1.4 Enter simulated speed.
2. Fill the spray liquid tank with water (approx. 1000 l).
3. Switch on the agitator.
4. Switch on the sprayer and check that all of the nozzles work properly.
5. Determine the individual nozzle output [l/min] on several nozzles.

   To do so, hold the quick-check cup for exactly 30 seconds under a nozzle.
6. Switch off the spraying.
7. Determine the average individual nozzle output [l/ha].

- Using the table on the quick-check cup.
- By calculation.
- Using the spray table.

Example:

Noz. size	'06'
Intended forward speed	7 km/h
Nozzle output on the left boom section:	0.85 l/30s
Nozzle output in the middle	0.84 l/30s
Nozzle output on the right boom section:	0.86 l/30s
Calculated average value:	**0.85 l/30s → 1.7 l/min**

1. Determining the individual nozzle output [l/ha] with the quick-check cup

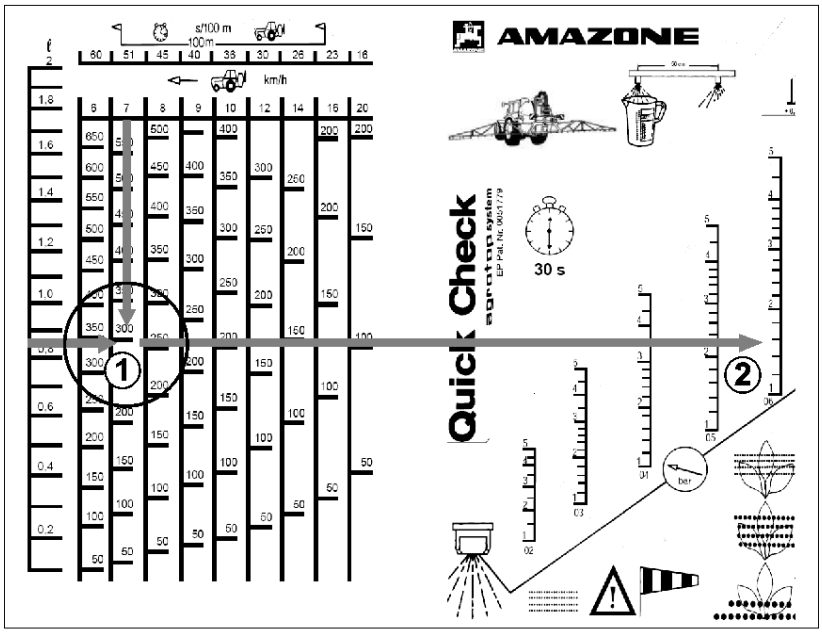

(1) →Determined application rate 290 l/ha
(2) →Determined spray pressure 1.6 bar

2. Calculating the individual nozzle output [l/ha]

$$\frac{d\ [l/min] \times 1200}{e\ [km/h]} = \text{Application rate } [l/ha]$$

- d: Nozzle output (calculated average value) [l/min]
- e: Forward speed [km/h]

$$\frac{1.7\ [l/min] \times 1200}{7\ [km/h]} = 291\ [l/ha]$$

3. Reading the individual nozzle output [l/ha] from the spray table

From the spray table (see page 276):

→ Application rate 291 l/ha
→ Spray pressure 1.6 bar

If the determined values for the application rate and application pressure do not match the set values:

- Calibrate the flow meter (see control terminal operating manual)
- Check all nozzles for wear and blockages.

14.14 Nozzles

WARNING

Risks due to accidental contact with spray liquid!

Flush the nozzles with flushing water before you remove the nozzles or diaphragm valves.

Fitting the nozzle

Different nozzle sizes are marked with bayonet nuts of different colours.

1. Insert the nozzle filter (5) into the nozzle body from below.

The nozzle is located in the bayonet nut

2. Press a rubber seal (6) above the nozzle into the seat for the bayonet nut.
3. Turn the bayonet nut on the bayonet connection up to the stop.

Removing the diaphragm valve if the nozzle is dripping

Deposits on the diaphragm seat in the nozzle body cause dripping after the nozzle has been switched off.

1. Remove the spring element (3).
2. Take out the diaphragm (2).
3. Clean the diaphragm seat.
4. Check the diaphragm for cracks.
5. Reinstall the diaphragm and spring element.

Checking the nozzle shutter

From time to time, check the seating of the shutter (4).

To do this, insert the shutter into the nozzle body as far as possible using moderate thumb pressure.

Do not insert the slider up to the stop when in a new condition under any circumstances.

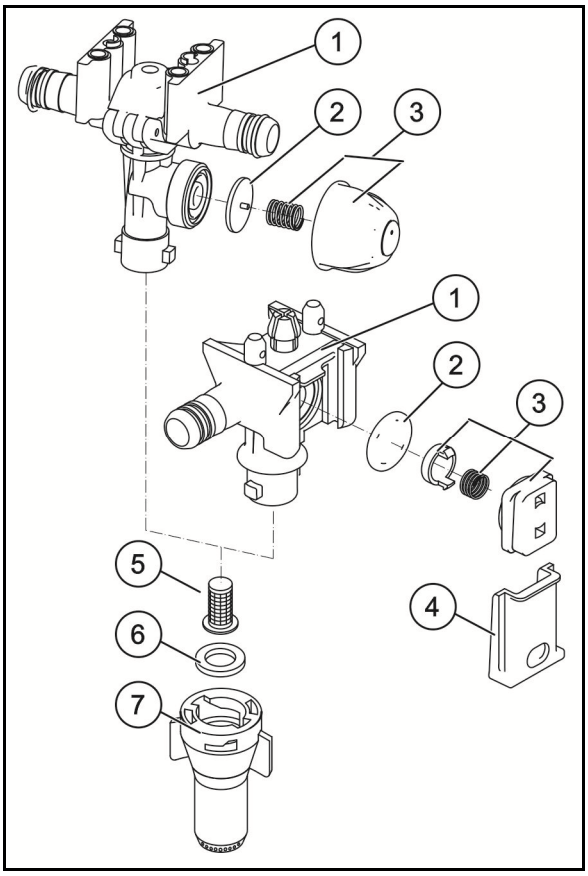

14.14.1 Line filter

- Clean the line filters (1) 3 - 4 months depending on operating conditions).
- Change damaged filter inserts.

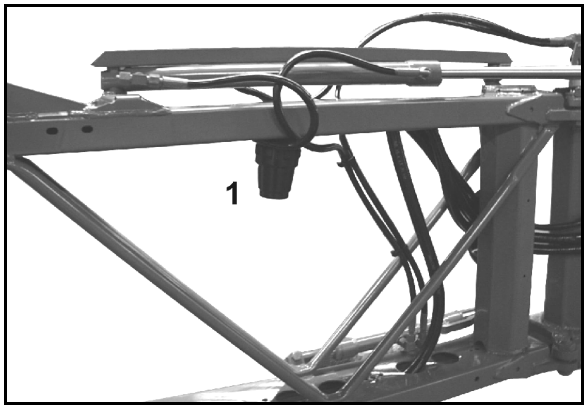

1. Press the locking piece together on the two lugs.
2. Remove the locking piece with O-ring seal, pressure spring and filter insert.
3. Clean (rinse out) the filter insert with petrol or thinner and then blow it dry with compressed air.
4. To reassemble, reverse the procedure and make sure that the O-ring seal is not twisted in the guide slot.

14.14.2 Instructions on testing the field sprayer

- Only authorised centres are permitted to carry out spray tests.
- According to law, a spray test must be carried out:
  - 6 months after commissioning (if not performed at time of purchase) at the latest, then
  - every two years thereafter.

Field sprayer test set (optional), order no.: 114586

Pressure gauge test

(1) Push-on cap (order no.: 913954) and connector (order no.: ZF195)

(2) Blind hose (order no.: 116059)

(3) Pressure gauge connection (order no.: 7107000)

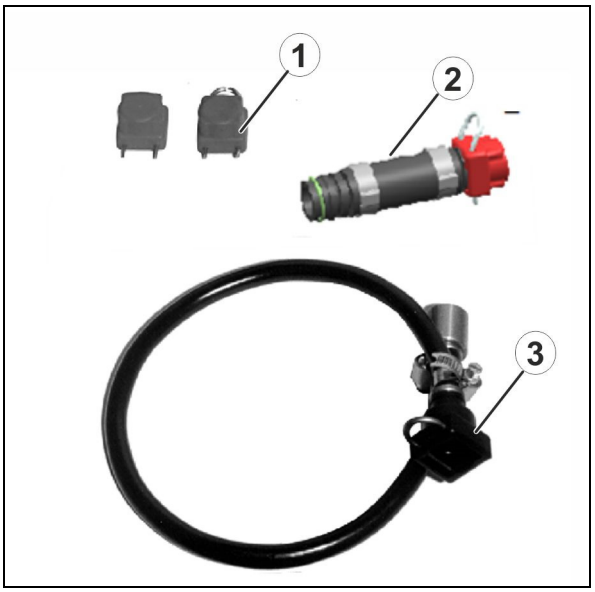

Flow meter test

(1) O-ring (order no.: FC122)

(2) Hose connection (order no.: GE095)

(3) Union nut (order no.: GE021)

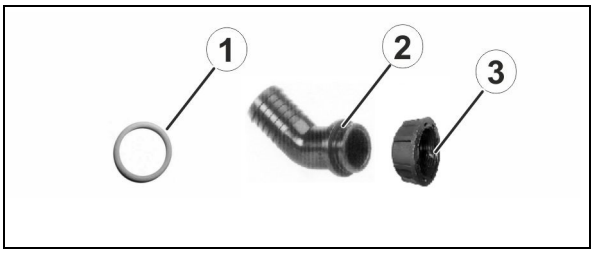

Pump test

(1) O-ring (order no.: FC149)

(2) Hose connection (order no.: GE052)

(3) Union nut (order no.:GE022)

(4) O-ring (order no.: FC468)

(5) Hose connection (order no.: ZF1395)

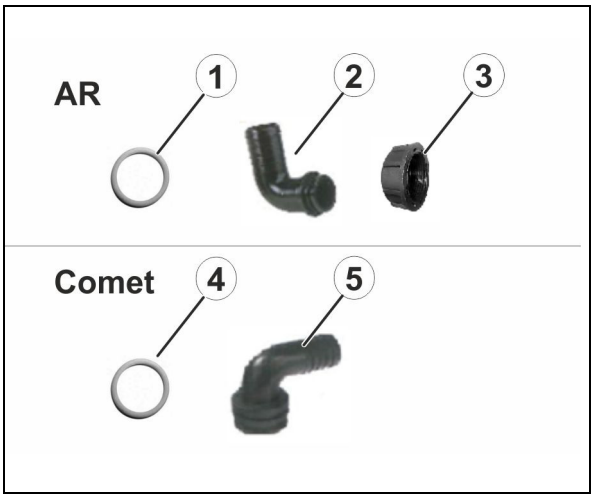

Pump test - testing pump performance (delivery capacity, pressure)

1. Loosen the union nut (1).
2. Put on the hose connection.
3. Tighten the union nut.

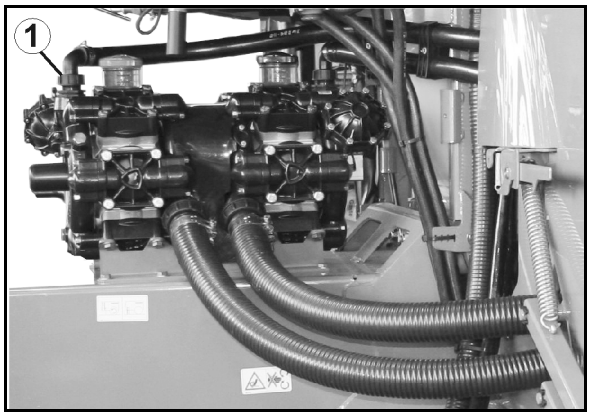

Flow meter test

and boom part width section chest

1. Loosen the union nut (1) behind the flow meter.
2. Fasten the plug-in socket (order no. 919345) with the union nut and connect it to the testing device.
3. Switch on spraying.

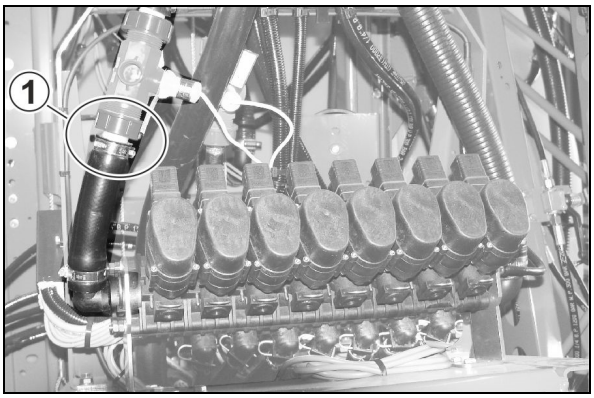

DUS pro single nozzle control

1. Loosen the union nut (1) behind the flow meter.
2. Fasten the plug-in socket (order no. 919345) with the union nut and connect it to the testing device.
3. Switch on spraying.

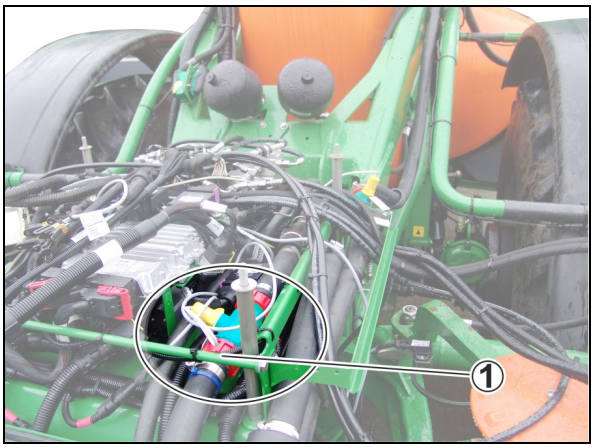

Pressure gauge test

and boom part width section chest

1. Remove one spray line from a part-width section valve and seal it with the blind hose (order no. 1166060).
2. Connect the pressure gauge connection to a part width section valve with the help of the turned socket.
3. Screw the check gauge 1/4 of an inch into the inside thread.
4. Switch on spraying

DUS pro single nozzle control

1. Disconnect the return line (1) beside the pressure sensor and seal it with the blind hose (order no. 1166060).
2. Connect the pressure gauge connection (order no. 7107000) to the spray line (2).
3. Screw the check gauge 1/4 of an inch into the inside thread.
4. Switch on spraying.

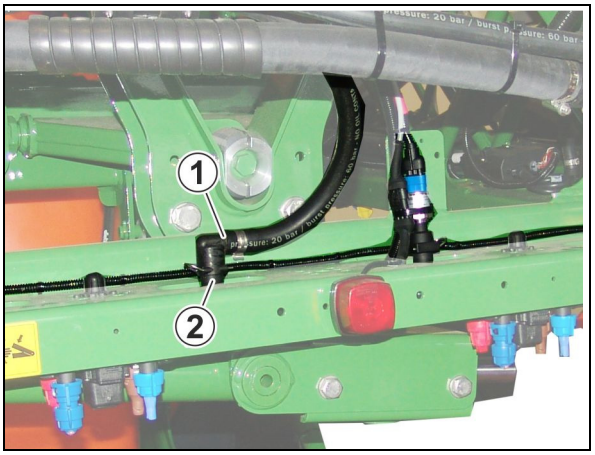

15 Diagrams and overviews

15.1 Liquid circuit

1X	**Hopper**
10	Spray liquid tank
11	Flushing water tank
12	Hand wash tank
13	Induction bowl
BEL082	Injector potentiometer
BEL092	Induction bowl sensor
BWA090	Fill level potentiometer
BWA091	Flushing water tank fill level sensor
2X	**Suction side**
20	External suction connection (3" camlock)
21	Suction tap
22	Drain main tank / quick emptying
23	Spray liquid tank shut-off function
24	Suction filter
25	Overpressure protection check valve
KWA060	Suction tap linear motor
KWA072	Drain main tank linear motor
GWA001	Spraying pump
GWA002	Agitator pump
BEL001	Water pumps speed sensor
3X	**Pressure side**
30	Pressure filter
31	Pressure relief valve
32	Pressure filling connection (C-coupling / firebrigade)
33	Filling connection hand wash tank with tap
34	Filling connection flushing water tank with tap
35	Pressure filling check valve flushing water tank
36	Pressure filling check valve spray liquid tank
37	7-way pressure tap
38	Pressure filter drain tap
KWA073	Quick emptying motor valve
KWA075	Pressure filling motor valve spray liquid tank
KWA076	Pressure filling motor valve flushing water tank
KWA077	Motor valve induction bowl supply with spray liquid
4X	**Induction bowl (ESB) & Injector**
40	Induction bowl supply tap via spraying pump / pressure filling
41	Induction bowl jet nozzle tap / spray gun
42	Ring line tap / canister cleaning
43	Canister cleaning
44	Induction bowl cleaning nozzle
45	Powder jet nozzle
46	Spray gun
47	Injector
48	Injector suction line check valve
49	Injector supply via induction bowl tap / suction connection (additional injector)
49a	Closed transfer system suction connection
49b	Closed transfer system flushing connection
KWA070	Injector operation on/off motor valve
KWA071	Injector supply via induction bowl motor valve / suction connection (additional injector)
KWA078	ECO-Fill suction motor valve

5X	**Cleaning & agitators**
50	Main agitator
51	Main agitator check valve
52	Secondary agitator
53	Check valve - secondary agitator
54	External wash-down device
55	Internal cleaning
KWA040	Auxiliary agitator motor valve
KWA045	Main agitator motor valve
BWA045	Pressure sensor - main agitator
KWA106	Motor valve, internal cleaning with spray liquid
6X	**Spraying operation**
60	Pressure stage 0.8 bar
KWA010	Spraying operation motor valve
KWA011	Pressure control valve
KWA020	Return flow control valve
7X	**Booms**
70	Part width valves
71	Pressure relief channel
72	Bypass valve
73	Spray line
74	DUS tap
75	DUS pressure valve
76	DUS check valve
BWA010	Spraying pressure sensor
BWA011	Flow meter 1
BWA020	Flow meter 2
BWA030	Flow meter 3

1XX	**HighFlow+**
100	Pressure relief valve
101	Pressure filter
102	Secondary agitator tap / drain pressure filter
103	Spray line check valves
KWA030	HighFlow+ motor valve

3XX	**AmaSelect / AmaSwitch**
300	Nozzle body
301	Boom stop tap
302	Return flow stop tap
303	Pressure side stop tap
304	Line filter
305	AmaSwitch pressure stage

15.2 Liquid circuit Comfort package 1 / part-width section control

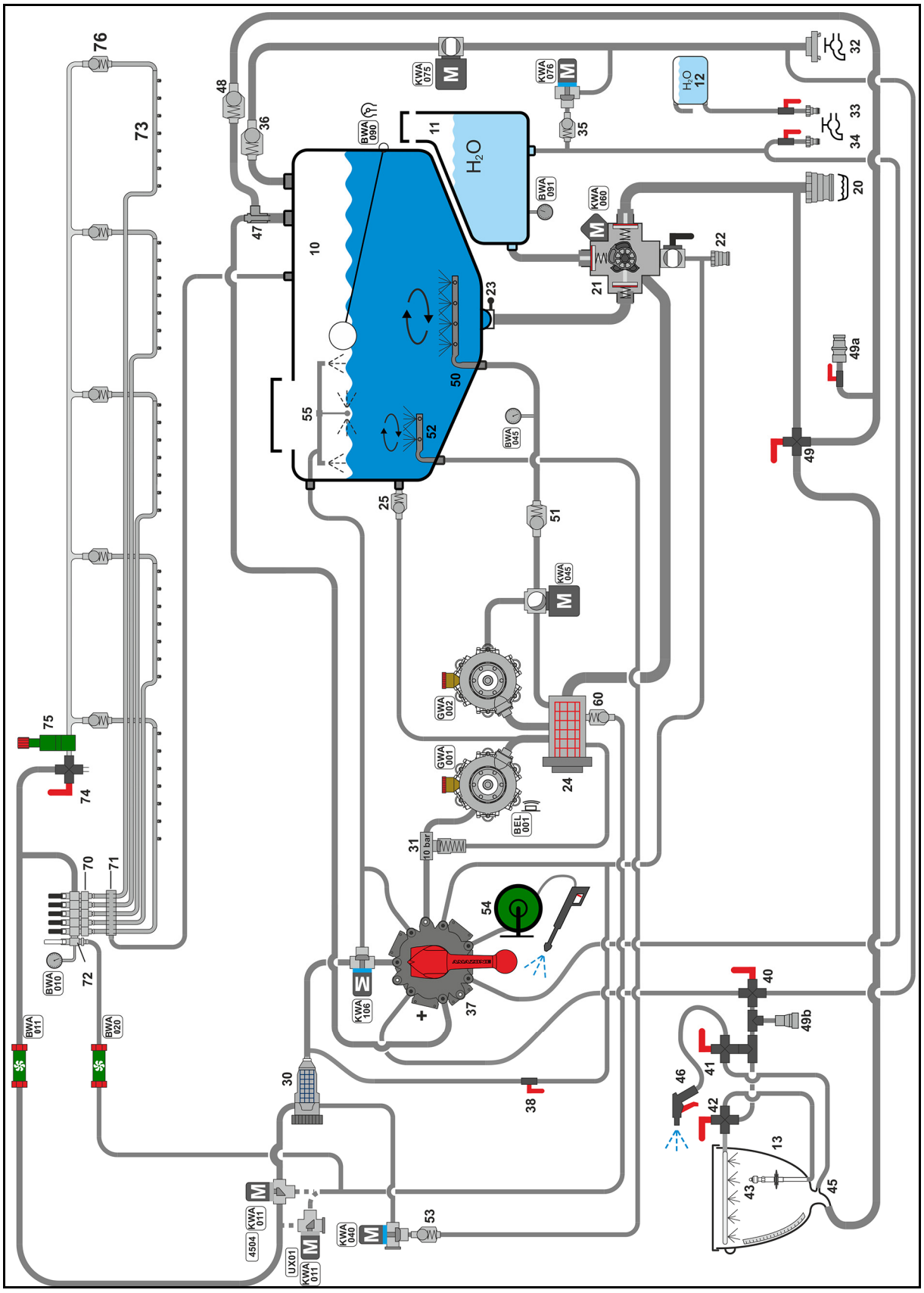

15.3 Liquid circuit Comfort package / part width section control

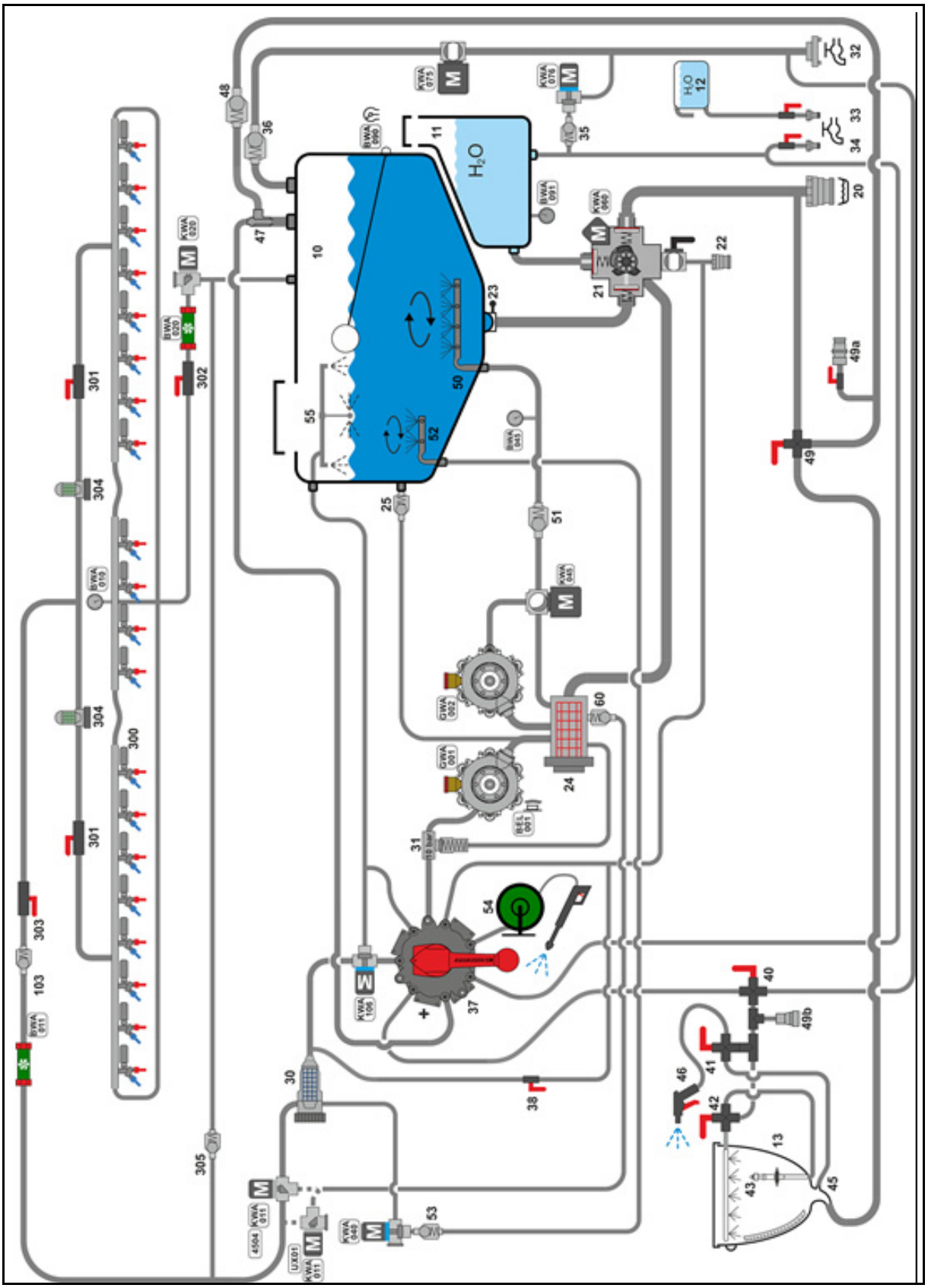

15.4 Overview of fuses and relay

Fuses on the vehicle battery

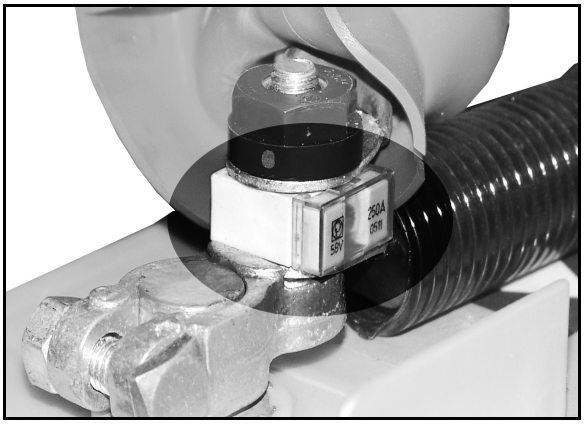

15.4.1 Fuses on the central electrics under the arm rest

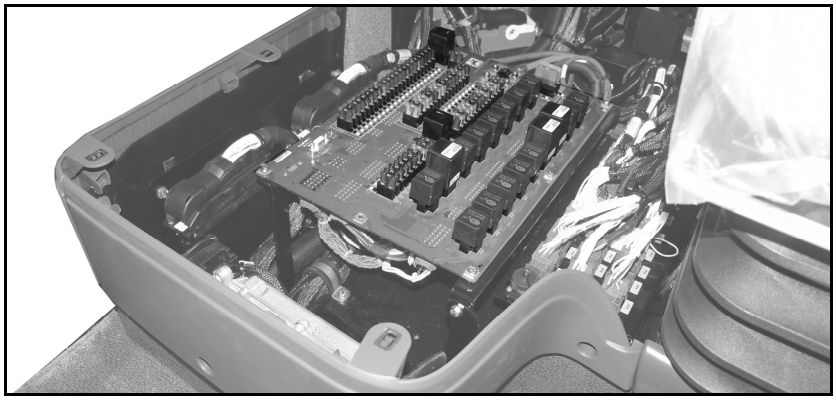

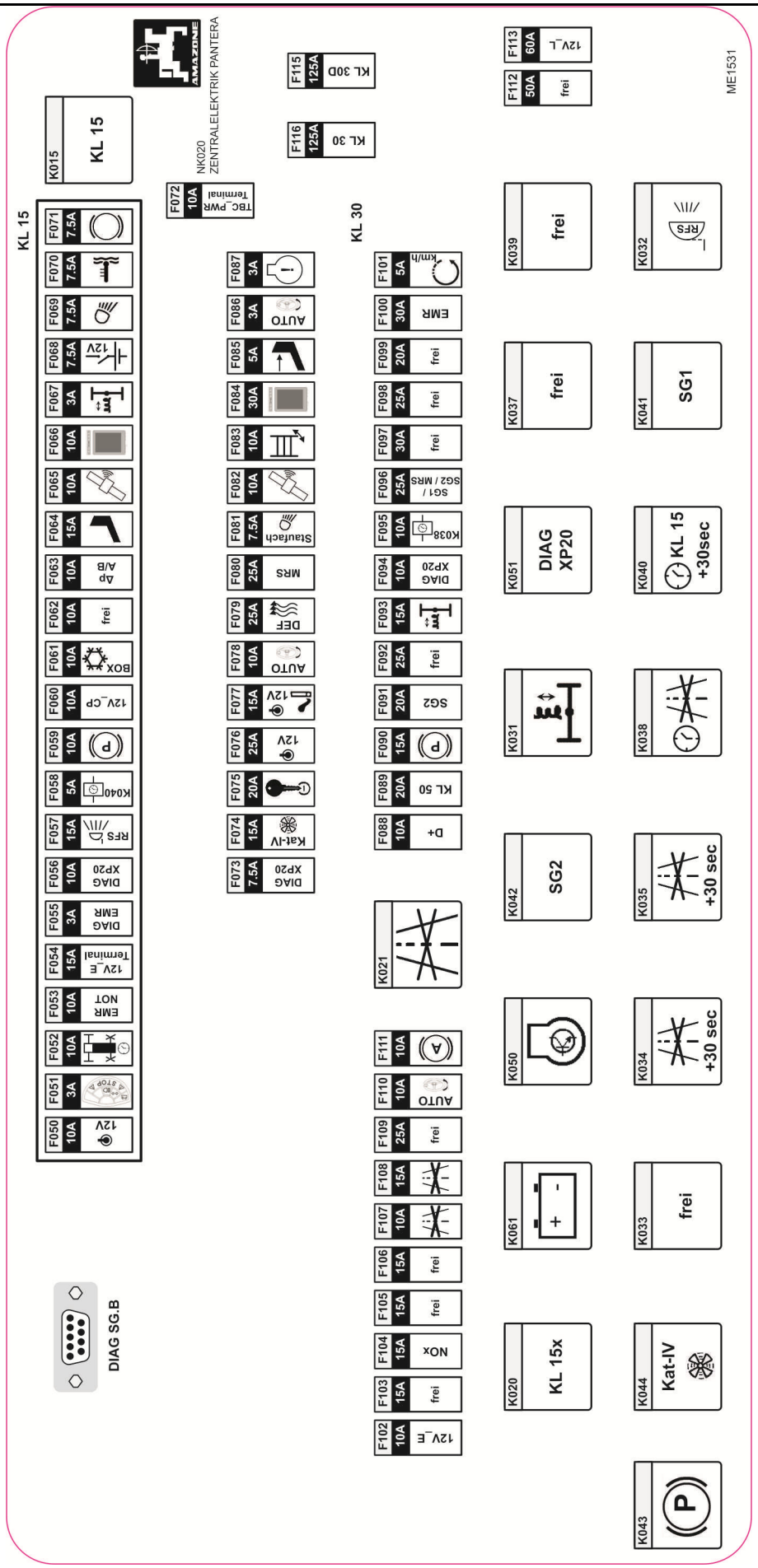
NK020
ZENTRALELEKTRIK PANTERA
KL 15
K015
KL 15
F072 10A TBC_PWR Terminal
F115 125A KL 30D
F116 125A KL 30
F113 60A 12V_L
F112 50A frei
ME1531
F071 7.5A
F070 7.5A
F069 7.5A
F068 7.5A 12V
F067 3A
F066 10A
F065 10A
F064 15A
F063 10A Ap A/B
F062 10A frei
F061 10A BOX
F060 10A 12V_CP
F059 10A
F058 5A K040
F057 15A RFS
F056 10A DIAG XP20
F055 3A DIAG EMR
F054 15A 12V_E Terminal
F053 10A EMR NOT
F052 10A
F051 3A
F050 10A 12V
F087 3A
F086 3A AUTO
F085 5A
F084 30A
F083 10A
F082 10A
F081 7.5A Startsch
F080 25A MRS
F079 25A DEF
F078 10A AUTO
F077 15A 12V
F076 25A 12V
F075 20A
F074 15A Kat-IV
F073 7.5A DIAG XP20
KL 30
F101 5A km/h
F100 30A EMR
F099 20A frei
F098 25A frei
F097 30A frei
F096 25A SG1 / SG2 / MRS
F095 10A K038
F094 10A DIAG XP20
F093 15A
F092 25A frei
F091 20A SG2
F090 15A
F089 20A KL 50
F088 10A D+
K021
F111 10A
F110 10A AUTO
F109 25A frei
F108 15A
F107 10A
F106 15A frei
F105 15A frei
F104 15A NOx
F103 15A frei
F102 10A 12V_E
K039 frei
K037 frei
K051 DIAG XP20
K031
K042 SG2
K050
K061
K020 KL 15x
K032 RFS
K041 SG1
K040 KL 15 +30sec
K038
K035 +30 sec
K034 +30 sec
K033 frei
K044 Kat-IV
K043
DIAG SG.B

List of fuses under the armrest

Number	Amperage	Function
F050	10 A	12V socket
F051	3 A	Warning light module
F052	10 A	Steering, rear axle
F053	10 A	Emergency shutdown - EMR
F054	15 A	+Ub AGR valve
F055	3 A	Terminal 15 SERDIA diagnosis
F056	10 A	CP-II valves, right
F057	15 A	Reversing headlight/reversing warning signal
F058	5 A	Cl 15 + 30sec
F059	10 A	Parking brake / air dryer sensor
F060	10 A	12V_CP
F061	10 A	Coolbox
F062	10 A	Lift/lower ESB button (OPTIONAL)
F063	10 A	Sensors: brake pressure point/brake pressure/hydraulic tank/high pressure A/high pressure B
F064	15 A	Drivers seat
F065	10 A	GPS antenna (terminal 15)
F066	10 A	AmaDrive switch-on signal
F067	3 A	Height adjustment sensor
F068	7.5A	Battery isolating relay controller
F069	7.5A	Spray liquid valve chest lighting
F070	7.5A	Spray liquid fitting floodlights button/temperature sensors: Hydraulic fluid/water
F071	7.5A	Battery isolating relay (controller)
F072	10 A	12V_E (basic equipment)
F073	7.5A	Electric actuation of the spray agent fitting
F074	15 A	Cat. IV ventilation system
F075	20 A	Ignition lock
F076	25 A	12 V socket (diagnosis)
F077	15 A	Cigar lighter/12V socket
F078	10 A	Steering system (L1)
F079	25 A	SCR / DEF heater
F080	25 A	Spare (terminal 30)
F081	7.5A	Storage compartment light
F082	10 A	GPS antenna
F083	10 A	Revolving beacon / intermediate lubrication
F084	30A	+Ub AmaDrive
F085	5 A	Seat contact
F086	3 A	Automatic steering system (foot switch)
F087	3 A	S045 (spare)
F088	10 A	Charging control signal D+
F089	20 A	Cl 50 EMR (START)

Number	Amperage	Function
F090	15 A	Parking brake
F091	20A	+Ub CU2
F092	25 A	Spare
F093	15 A	Spring suspension (hard/soft)
F094	10 A	+Ub diagnosis plug XP20
F095	10A	Terminal 15 +30 sec
F096	25 A	+Ub CU1 / CU3
F097	30A	Suction tap/main agitator (CP-II ONLY)
F098	25 A	Spare
F099	20 A	Spare
F100	30A	+Ub EMR
F101	5A	Wheel speed sensor 1-4
F102	10 A	12V_E
F103	15 A	Spare
F104	15 A	NOx sensors
F105	15 A	Spare
F106	15 A	Spare
F107	10 A	K038 (Field signal +30 sec)
F108	15 A	Field signal (roof CES)
F109	25 A	Spare
F110	10 A	Automatic steering system (OSPED / SASA) (OPTIONAL)
F111	10 A	AutoHold
F112	50 A	12V_L
F113	60 A	12V_L
F115	125A	12VDC roof central electrical system
F116	125A	12VDC central electrical system

Relay under the arm rest

Number	Function
K015	Relay terminal 15
K020	High beam, left / right side
K021	Relay, road/field
K031	Relay, spring suspension
K032	Relay, reversing signal (RS)
K033	Spare relay
K034	Relay, safety deactivation of the steering, rear axle left
K035	Relay, safety deactivation of the steering, rear axle right
K037	Spare relay
K038	Field signal relay +30 sec
K039	Spare relay
K040	Time relay +Ub CU1 / CU2
K041	Relay +Ub (CU1)
K042	Relay +Ub (CU2)
K043	Parking brake relay
K044	Relay, Cat. IV
K047	Flasher unit USA
K048	Flasher unit
K050	Relay, motor start
K051	Relay KI15 + 30sec.
K061	Relay, generator voltage D+

15.4.2 Fuses and relay in the cabin roof

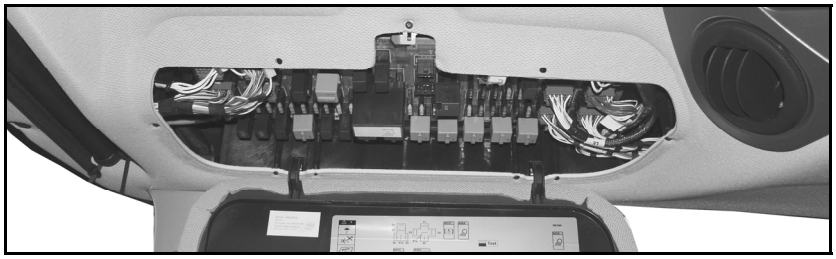

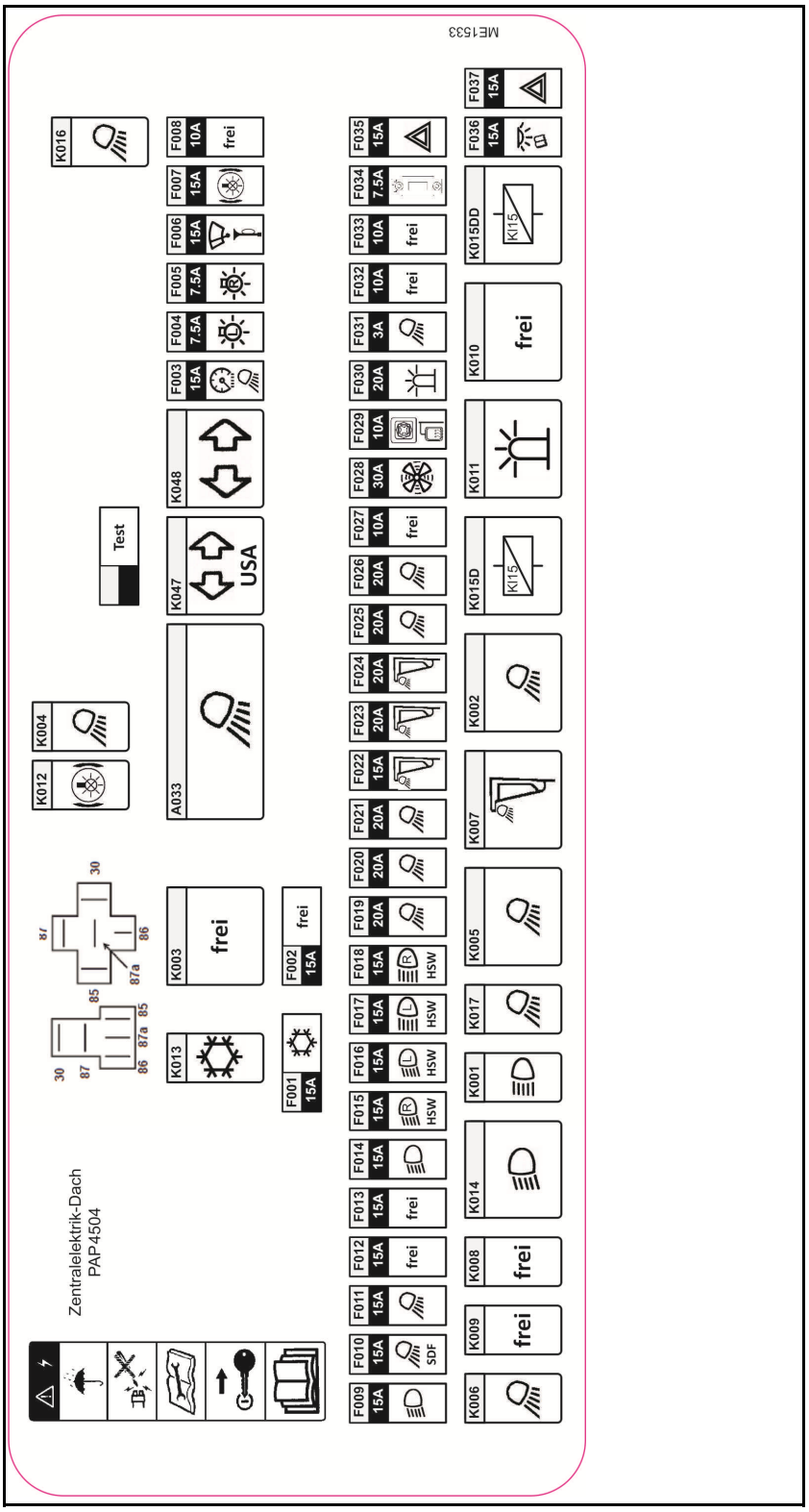

List of the fuses roof

Number	Amperage	Function
F001	15 A	Air conditioner compressor
F002	15 A	spare
F003	7.5 A	Signal "DIPPED BEAM on" for coming home
F004	7.5 A	Side/rear light left side
F005	7.5 A	Side/rear light right side, 3rd rear light
F006	15 A	Windscreen washer system
F007	15 A	Brake light right/left, 3rd brake light,
F008	10 A	spare
F009	15 A	Dipped beam right / left side, high beam right / left side, dashboard / switch lighting
F010	15 A	Sidefinder right / left side
F011	15 A	Work lights platform right side (LIGHT 3 right side)
F012	15 A	spare
F013	15 A	spare
F014	15 A	Signal "DIPPED BEAM on" for SG1
F015	15 A	Dipped beam, right side
F016	15 A	Dipped beam, left side
F017	15 A	High beam, left side
F018	15 A	High beam, right side
F019	20 A	Floodlight, railing, inner left
F020	20 A	Floodlight, railing, outer right
F021	20 A	Work lights platform left side (LIGHT 3 left side)
F022	15 A	Cabin roof work lights, outside right / left side
F023	20 A	Work lights cabin roof left side middle (Xenon lighting left side)
F024	20 A	Work lights cabin roof right side middle (Xenon lighting right side)
F025	20 A	Work lights railing left
F026	20 A	Work lights railing right
F027	10 A	spare
F028	30 A	Air conditioning, fan
F029	10 A	Rear view mirror heating on right / left side, rear view mirror adjustment on right / left side
F030	20 A	Revolving beacon
F031	3 A	Field signal, Sidefinder module (A033)
F032	10 A	spare
F033	10 A	Camera system (option)
F034	7.5 A	Radio
F035	15 A	Hazard warning lights, indicators
F036	15 A	Reading lamp, Radio
F037	15 A	Hazard warning flashers

New roof relay

Number	Function
K001	High beam, left / right side
K002	Work lights, railing left / right side
K003	free
K004	Work lights Coming home function
K005	Work lights, platform left side
K006	Work lights, platform right side
K007	Work lights cabin roof front
K008	Reserve
K009	Reserve
K010	Reserve
K011	Work lights cabin roof rear, ESB, hydraulic tank
K012	Brake light signal
K013	Air conditioner compressor
K014	Dipped beam, left / right side
K015D	Kl 15D (KL15 for roof ZE 544.2)
K015DD	Kl 15DD (KL15 for roof ZE)
K016	Work lights, railing left / right side
K017	Work lights, railing left / right side

15.4.3 New relay behind the seat

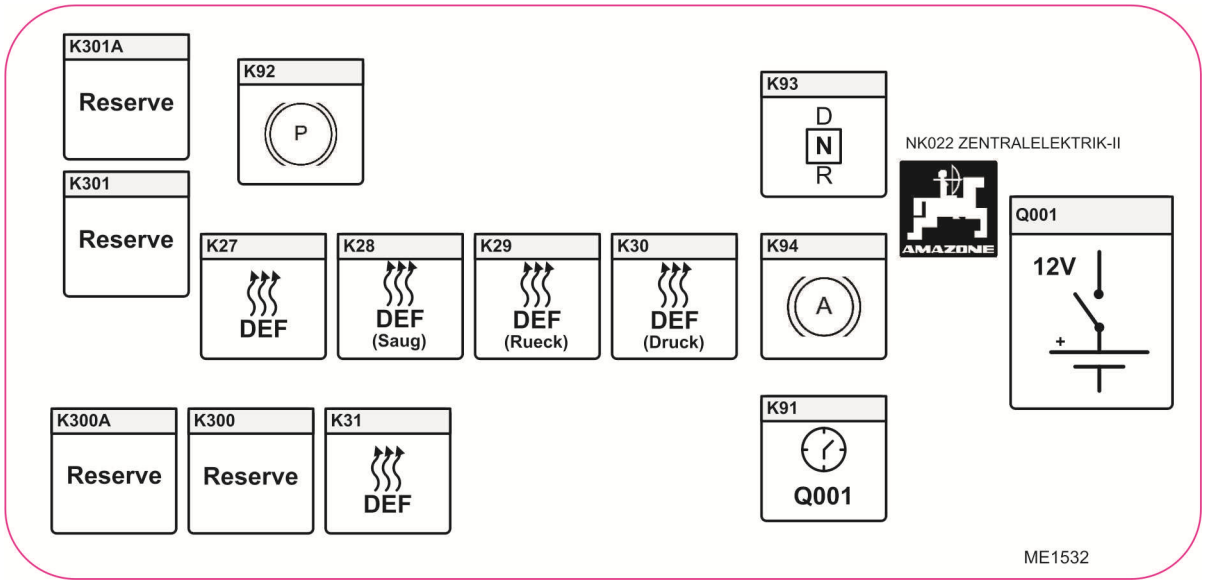

Number	Function
K27	Relay, heating element feed
K28	Relay, heating element 1 (suction line)
K29	Relay, heating element 2 (return flow)
K30	Relay, heating element 3 (pressure line)
K31	Relay, SCR control
K91	Relay, battery management control
K92	Spare relay
K93	Neutral switch relay
K94	Spare relay
K300	Relay, suction tap control
K300A	Relay, suction tap control
K301	Relay, main agitator control
K301A	Relay, main agitator control
Q001	Battery isolating relay

15.4.4 Boom fuses and relays on the control panel

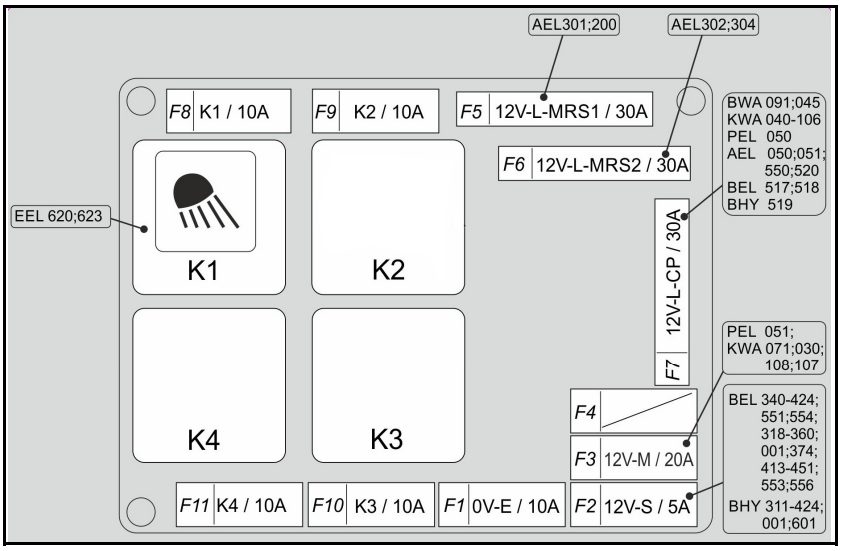

Fuses on the control panel

Number	Amper-age	Function
F1	10 A	OV_E
F2	5 A	12V-L-S Tilting cylinder pressure, right-side
F3	20 A	12V_M
F4	30 A	Spare
F5	30 A	12V_L_MRS1
F6	30 A	12V_L_MRS2
F7	30 A	12V_C_CP
F8	10 A	K1 Boom work floodlights, left-side / surroundings on right-side
F9	10 A	K2
F10	10 A	K3
F11	10 A	K4

Relays on the control panel

Number	Function
K1	Work lights (NZ163)
K2	Intensive cleaner 1 (NZ163)
K3	Spare (NZ163)
K4	Intensive cleaner 2 (NZ163)

15.4.5 Boom illumination in the cab, rear right

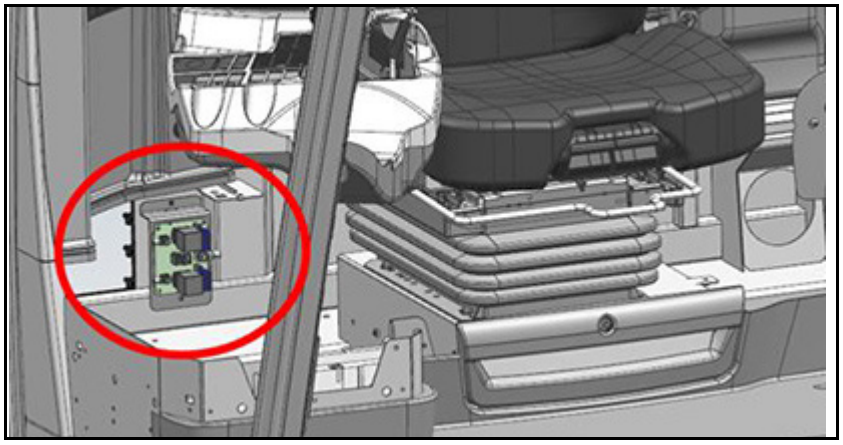

Fuses in the cab, rear right

Number	Am-perage	Function
F302	60 A	12V_L_Sprayer
F303	60 A	Spare

Relays in the cab, rear right

Number	Function
K302	12V_L_Sprayer
K303	Spare

15.4.6 AmaSelect fuses on the boom

The fuses are located under the cover hood on the centre section of the boom.

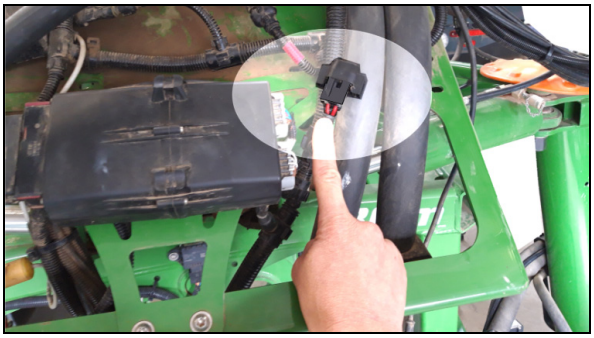

Number	Am-perage	Function
---	15 A	AmaSelect motor
---	15 A	AmaSelect lighting

15.5 Screw tightening torques

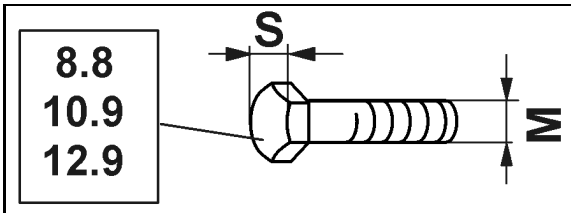

M	S	Nm 8.8	Nm 10.9	Nm 12.9
M 8	13	25	35	41
M 8x1		27	38	41
M 10	16 (17)	49	69	83
M 10x1		52	73	88
M 12	18 (19)	86	120	145
M 12x1.5		90	125	150
M 14	22	135	190	230
M 14x1.5		150	210	250
M 16	24	210	300	355
M 16x1.5		225	315	380
M 18	27	290	405	485
M 18x1.5		325	460	550
M 20	30	410	580	690
M 20x1.5		460	640	770
M 22	32	550	780	930
M 22x1.5		610	860	1050
M 24	36	710	1000	1200
M 24x2		780	1100	1300
M 27	41	1050	1500	1800
M 27x2		1150	1600	1950
M 30	46	1450	2000	2400
M 30x2		1600	2250	2700

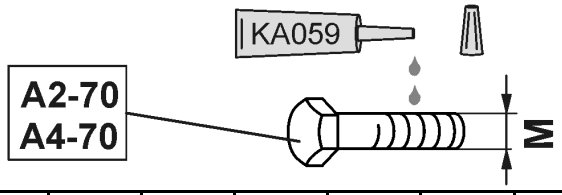

M	M4	M5	M6	M8	M10	M12	M14	M16	M18	M20	M22	M24
Nm	2,4	4,9	8,4	20,6	40,7	70,5	112	174	242	342	470	589

Coated bolts have different tightening torques.

Observe the specific data for tightening torques in the maintenance section.

16 Spray table

16.1 Spray tables for flat-fan, anti-drift, injector and airmix nozzles, spraying height 50 cm

- The spray rates [l/ha] listed in the spray tables are only valid for water. To convert the spray rates given into AUS, multiply these by 0.88 and, for NP solutions, by 0.85.
- The table on page 274 serves to select the suitable nozzle type. The nozzle type is determined by
  - the intended forward speed,
  - the required spray rate and
  - the required atomisation characteristic (fine, medium or coarse-dropped) of the crop protection agent used for the crop protection measure.
- The spray table on page 276 serves to
  - determine the nozzle size.
  - determine the required spray pressure.
  - determine the required individual nozzle output for calibrating the field sprayer.

Permissible pressure ranges for different nozzle types and sizes

Nozzle type		Manufacturer	Permissible pressure range [bar]	
			min. pressure	max. pressure
XRC		TeeJet	1	5
AD		Lechler	1,5	5
Air Mix		agrotop	1	6
IDK / IDKN		Lechler	1	6
IDKT			1,5	6
ID3	**01 - 015**		3	8
ID3	**02 - 08**		2	8
IDTA 120			1	8
AI		TeeJet	2	8
TTI			1	7
AVI Twin		agrotop	2	8
TD Hi Speed			2	10

For further information about the nozzle characteristics, see the nozzle manufacturer's website.

www.agrotop.com / www.lechler-agri.de / www.teejet.com

Selecting the nozzle type

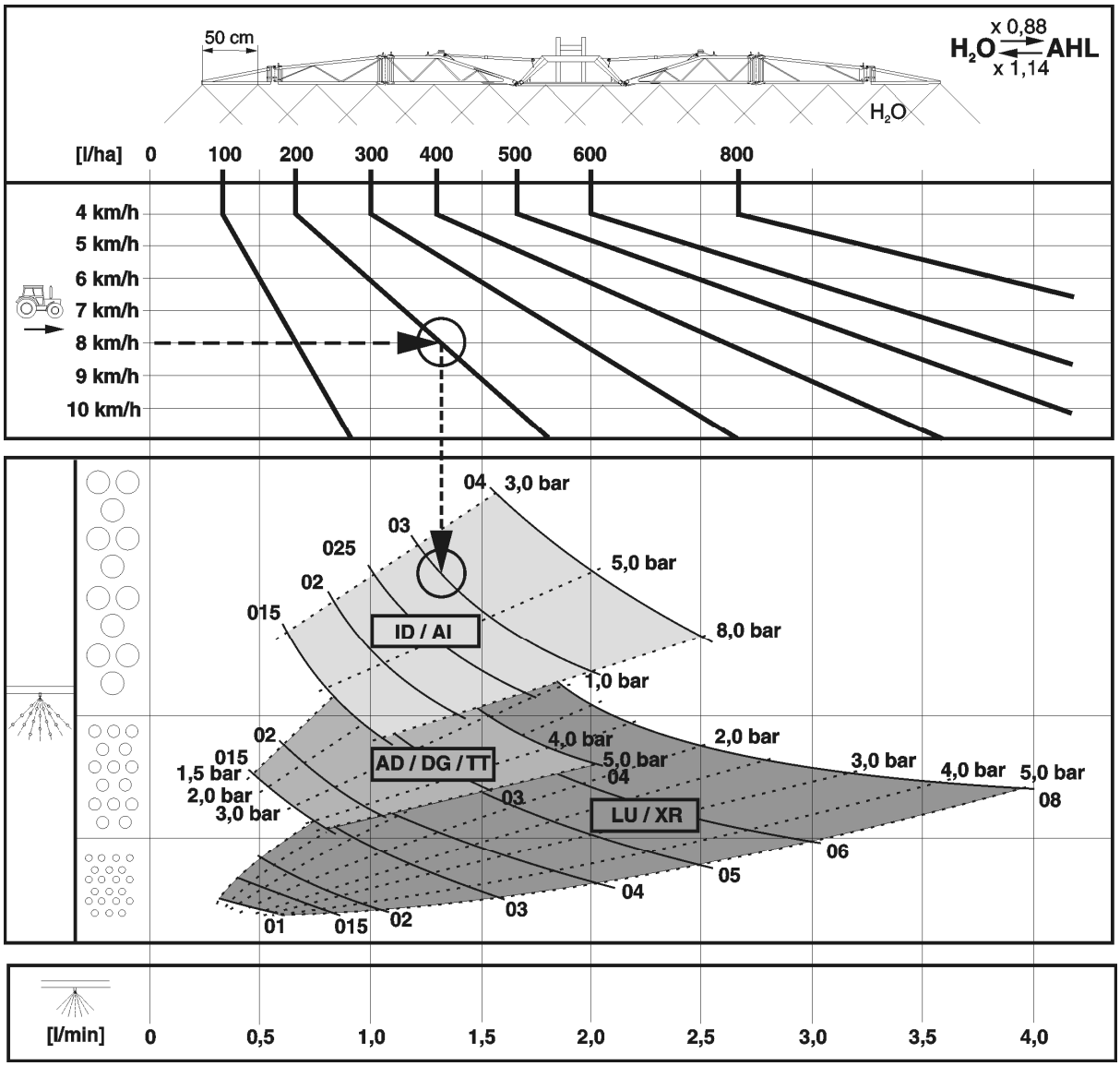

Example:

Required spray rate:	**200 l/ha**
Intended operational speed:	**8 km/h**
Required atomisation characteristic for the crop protection measure:	**coarse-dropped** (fine drifting)
Required nozzle type:	?
Required nozzle size:	?
Required spray pressure:	? bar
Required individual nozzle output for calibrating the field sprayer:	? l/min

Determining the nozzle type, nozzle size, spray pressure and individual nozzle output

1. Determine the working point for the required spray rate (**200 l/ha**) and the intended operational speed (**8 km/h**).
2. At the working point, trace a line down the table. Depending on the position of the working point, this line will run through the cells for various nozzle types.
3. Select the best nozzle type for the crop protection measure in question, with reference to the required atomisation characteristic (fine, medium or coarse-dropped).

→ Nozzle choice for the example given above:

→ Nozzle type: **AI or ID**

4. Go to the spray table, see on page 276.
5. In the column with the intended operational speed (**8 km/h**), find the required spray rate (**200 l/ha**) or a figure which is as close as possible to the required spray rate (in this case, for example, **195 l/ha**).
6. In the line with the required spray rate (**195 l/ha**),
   - read the nozzle sizes in question. Select a suitable nozzle size (e.g.**'03'**).
   - where the nozzle size column intersects with the selected nozzle size, read the required spray pressure (e.g. **3.7 bar**).
   - read the required individual nozzle output (**1.3 l/min**) for calibrating the field sprayer.

Required nozzle type:	**AI / ID**
Required nozzle size:	**'03'**
Required spray pressure:	**3.7 bar**
Required individual nozzle output for calibrating the field sprayer:	**1.3 l/min**

50 cm

H_2O — l/ha

6	6,5	7	7,5	8	8,5	9	10	11	12	14	16	l/min	bar 015	02	025	03	04	05	06	08
km/h																				
80	74	69	64	60	56	53						0,4	1,4							
100	92	86	80	75	71	67	60	55				0,5	2,2	1,2						
120	111	103	96	90	85	80	72	65	60	51		0,6	3,1	1,8	1,1					
140	129	120	112	105	99	93	84	76	70	60	53	0,7	4,2	2,4	1,5	1,1				
160	148	137	128	120	113	107	96	87	80	69	60	0,8	5,5	3,1	2,0	1,4				
180	166	154	144	135	127	120	108	98	90	77	68	0,9	7,0	4,0	2,5	1,8	1,0			
200	185	171	160	150	141	133	120	109	100	86	75	1,0		4,9	3,1	2,2	1,2			
220	203	189	176	165	155	147	132	120	110	94	83	1,1		5,9	3,7	2,7	1,5	1,0		
240	222	206	192	180	169	160	144	131	120	103	90	1,2		7,0	4,4	3,2	1,8	1,1		
260	240	223	208	195	184	173	156	142	130	111	98	1,3			5,2	3,7	2,1	1,3	1,0	
280	259	240	224	210	198	187	168	153	140	120	105	1,4			6,0	4,3	2,4	1,6	1,1	
300	277	257	240	225	212	200	180	164	150	129	113	1,5			6,9	5,0	2,8	1,8	1,2	
320	295	274	256	240	226	213	192	175	160	137	120	1,6				5,7	3,2	2,0	1,4	
340	314	291	272	255	240	227	204	185	170	146	128	1,7				6,4	3,6	2,3	1,6	
360	332	309	288	270	254	240	216	196	180	154	135	1,8				7,2	4,0	2,6	1,8	1,0
380	351	326	304	285	268	253	228	207	190	163	143	1,9					4,5	2,9	2,0	1,1
400	369	343	320	300	282	267	240	218	200	171	150	2,0					4,9	3,2	2,2	1,2
420	388	360	336	315	297	280	252	229	210	180	158	2,1					5,4	3,5	2,4	1,4
440	406	377	352	330	311	293	264	240	220	189	165	2,2					6,0	3,8	2,7	1,5
460	425	394	368	345	325	307	276	251	230	197	173	2,3					6,5	4,2	2,9	1,6
480	443	411	384	360	339	320	288	262	240	206	180	2,4					7,1	4,6	3,2	1,8
500	462	429	400	375	353	333	300	273	250	214	188	2,5						5,0	3,4	1,9
520	480	446	416	390	367	347	312	284	260	223	195	2,6						5,4	3,7	2,1
540	499	463	432	405	381	360	324	295	270	231	203	2,7						5,8	4,0	2,3
560	517	480	448	420	395	373	336	305	280	240	210	2,8						6,2	4,3	2,4
580	535	497	464	435	409	387	348	316	290	249	218	2,9						6,7	4,6	2,6
600	554	514	480	450	424	400	360	327	300	257	225	3,0						7,1	5,0	2,8
620	572	531	496	465	438	413	372	338	310	266	233	3,1								3,0
640	591	549	512	480	452	427	384	349	320	274	240	3,2								3,2
660	609	566	528	495	466	440	396	360	330	283	248	3,3								3,4
680	628	583	544	510	480	453	408	371	340	291	255	3,4								3,6
700	646	600	560	525	494	467	420	382	350	300	263	3,5								3,8
720	665	617	576	540	508	480	432	393	360	309	270	3,6								4,0
740	683	634	592	555	522	493	444	404	370	318	278	3,7								4,3
			608	570	537	507	456	415	380	326	285	3,8								4,5
			624	585	551	520	468	425	390	335	293	3,9								4,7
			640	600	565	533	480	436	400	343	300	4,0								5,0

H_2O ⇄ AHL: x 0,88 / x 1,14

LU / XR: 1 – 5 bar
AD: 1,5 – 6 bar
ID / AI: 2 – 8 bar
IDK / Air Mix: 1 – 6 bar
TTI: 1 – 7 bar

ME 735

16.2 Spraying nozzles for liquid manure

Nozzle type	Manufacturer	Permissible pressure range [bar]	
		min. pressure	max. pressure
3- jet	agrotop	2	8
7- hole	TeeJet	1.5	4
FD	Lechler	1.5	4
Drag hose	AMAZONE	1	4

16.2.1 Spray table for three-ray nozzles, spraying height 120 cm

AMAZONE - Spray table for three-ray nozzles (yellow)

Pressure	Nozzle output		AUS spray rate (l/ha) /								
	Water	AUS	6	7	8	9	10	11	12	14	16
(bar)	(l/min)		km/h								
1,0	0,36	0,32	**64**	**55**	**48**	**43**	**39**	**35**	**32**	**28**	**24**
1,2	0,39	0,35	**69**	**60**	**52**	**47**	**42**	**38**	**35**	**30**	**26**
1,5	0,44	0,39	**78**	**67**	**59**	**53**	**47**	**43**	**39**	**34**	**30**
1,8	0,48	0,42	**85**	**73**	**64**	**57**	**51**	**47**	**43**	**37**	**32**
2,0	0,50	0,44	**88**	**75**	**66**	**59**	**53**	**48**	**44**	**38**	**33**
2,2	0,52	0,46	**92**	**78**	**69**	**62**	**55**	**50**	**46**	**39**	**35**
2,5	0,55	0,49	**98**	**84**	**74**	**66**	**57**	**54**	**49**	**52**	**37**
2,8	0,58	0,52	**103**	**88**	**77**	**69**	**62**	**56**	**52**	**44**	**39**
3,0	0,60	0,53	**106**	**91**	**80**	**71**	**64**	**58**	**53**	**46**	**40**

AMAZONE - Spray table for three-ray nozzles (red)

Pressure	Nozzle output		AUS spray rate (l/ha) /								
	Water	AUS	6	7	8	9	10	11	12	14	16
(bar)	(l/min)		km/h								
1.0	0.61	0.54	**108**	**93**	**81**	**72**	**65**	**59**	**54**	**47**	**41**
1.2	0.67	0.59	**118**	**101**	**88**	**78**	**70**	**64**	**59**	**51**	**44**
1.5	0.75	0.66	**132**	**114**	**99**	**88**	**79**	**72**	**66**	**57**	**50**
1.8	0.79	0.69	**138**	**119**	**104**	**92**	**83**	**76**	**69**	**60**	**52**
2.0	0.81	0.71	**142**	**122**	**107**	**95**	**85**	**78**	**71**	**61**	**54**
2.2	0.84	0.74	**147**	**126**	**111**	**98**	**88**	**80**	**74**	**63**	**56**
2.5	0.89	0.78	**155**	**133**	**117**	**104**	**93**	**84**	**78**	**67**	**59**
2.8	0.93	0.82	**163**	**140**	**122**	**109**	**98**	**87**	**82**	**70**	**61**
3.0	0.96	0.84	**168**	**144**	**126**	**112**	**101**	**92**	**84**	**72**	**63**

AMAZONE - Spray table for three-ray nozzles (blue)

Pres-sure	Nozzle output		AUS spray rate (l/ha) /								
	Water	AUS	6	7	8	9	10	11	12	14	16
(bar)	(l/min)		km/h								
1.0	0.86	0.76	**152**	**130**	**114**	**101**	**91**	**83**	**76**	**65**	**57**
1.2	0.94	0.83	**166**	**142**	**124**	**110**	**99**	**91**	**83**	**71**	**62**
1.5	1.05	0.93	**186**	**159**	**140**	**124**	**112**	**102**	**93**	**80**	**70**
1.8	1.11	0.98	**196**	**167**	**147**	**131**	**117**	**107**	**98**	**84**	**74**
2.0	1.15	1.01	**202**	**173**	**152**	**135**	**121**	**110**	**101**	**87**	**76**
2.2	1.20	1.06	**212**	**182**	**159**	**141**	**127**	**116**	**106**	**91**	**80**
2.5	1.26	1.12	**224**	**192**	**168**	**149**	**135**	**122**	**112**	**96**	**84**
2.8	1.32	1.17	**234**	**201**	**176**	**156**	**141**	**128**	**117**	**101**	**88**
3.0	1.36	1.20	**240**	**206**	**180**	**160**	**144**	**131**	**120**	**103**	**90**

AMAZONE - Spray table for three-ray nozzles (white)

Pres-sure	Nozzle output		AUS spray rate (l/ha) /								
	Water	AUS	6	7	8	9	10	11	12	14	16
(bar)	(l/min)		km/h								
1.0	1.16	1.03	**206**	**177**	**155**	**137**	**124**	**213**	**103**	**89**	**78**
1.2	1.27	1.12	**224**	**192**	**168**	**149**	**134**	**222**	**112**	**96**	**84**
1.5	1.42	1.26	**252**	**217**	**190**	**168**	**151**	**138**	**126**	**109**	**95**
1.8	1.56	1.38	**277**	**237**	**207**	**184**	**166**	**151**	**139**	**119**	**104**
2.0	1.64	1.45	**290**	**249**	**217**	**193**	**174**	**158**	**145**	**125**	**109**
2.2	1.73	1.54	**307**	**263**	**230**	**204**	**185**	**168**	**154**	**132**	**115**
2.5	1.84	1.62	**325**	**279**	**244**	**216**	**195**	**178**	**163**	**140**	**122**
2.8	1.93	1.71	**342**	**293**	**256**	**228**	**205**	**187**	**171**	**147**	**128**
3.0	2.01	1.78	**356**	**305**	**267**	**237**	**214**	**194**	**178**	**153**	**134**

16.2.2 Spray table for 7-hole nozzles

AMAZONE Spray table for 7-hole nozzle SJ7-02VP (yellow)

Pres-sure	Nozzle output per dosing disc		AUS spray rate AHL (l/ha) /								
	Wasser	AHL	6	7	8	9	10	11	12	14	16
(bar)	(l/min)		km/h								
1,5	0,55	0,49	**98**	**84**	**74**	**65**	**59**	**53**	**49**	**42**	**37**
2,0	0,64	0,57	**114**	**98**	**86**	**76**	**68**	**62**	**57**	**49**	**43**
2,5	0,72	0,64	**128**	**110**	**96**	**85**	**77**	**70**	**64**	**55**	**48**
3,0	0,80	0,71	**142**	**122**	**107**	**95**	**85**	**77**	**71**	**61**	**53**
3,5	0,85	0,75	**150**	**129**	**113**	**100**	**90**	**82**	**75**	**64**	**56**
4,0	0,93	0,82	**164**	**141**	**123**	**109**	**98**	**89**	**82**	**70**	**62**

AMAZONE Spray table for 7-hole nozzle SJ7-03VP (blue)

Pres-sure	Nozzle output per dosing disc		AUS spray rate AHL (l/ha) /								
	Wasser	AHL	6	7	8	9	10	11	12	14	16
(bar)	(l/min)		km/h								
1,5	0,87	0,77	**154**	**132**	**116**	**103**	**92**	**84**	**77**	**66**	**58**
2,0	1,00	0,88	**176**	**151**	**132**	**117**	**106**	**96**	**88**	**75**	**66**
2,5	1,10	0,97	**194**	**166**	**146**	**129**	**116**	**106**	**97**	**83**	**73**
3,0	1,18	1,04	**208**	**178**	**156**	**139**	**125**	**113**	**104**	**89**	**78**
3,5	1,27	1,12	**224**	**192**	**168**	**149**	**134**	**122**	**112**	**96**	**84**
4,0	1,31	1,16	**232**	**199**	**174**	**155**	**139**	**127**	**116**	**99**	**87**

AMAZONE Spray table for 7-hole nozzle SJ7-04VP (red)

Pres-sure	Nozzle output per dosing disc		AUS spray rate AHL (l/ha) /								
	Wasser	AHL	6	7	8	9	10	11	12	14	16
(bar)	(l/min)		km/h								
1,5	1,17	1,04	**208**	**178**	**156**	**139**	**125**	**113**	**104**	**89**	**78**
2,0	1,33	1,18	**236**	**202**	**177**	**157**	**142**	**129**	**118**	**101**	**89**
2,5	1,45	1,28	**256**	**219**	**192**	**171**	**154**	**140**	**128**	**110**	**96**
3,0	1,55	1,37	**274**	**235**	**206**	**183**	**164**	**149**	**137**	**117**	**103**
3,5	1,66	1,47	**295**	**253**	**221**	**196**	**177**	**161**	**147**	**126**	**110**
4,0	1,72	1,52	**304**	**261**	**228**	**203**	**182**	**166**	**152**	**130**	**114**

AMAZONE Spray table for 7-hole nozzle SJ7-05VP (brown)

Pres-sure	Nozzle output per dosing disc		AUS spray rate AHL (l/ha) /								
	Wasser	AHL	6	7	8	9	10	11	12	14	16
(bar)	(l/min)		km/h								
1,5	1,49	1,32	**264**	**226**	**198**	**176**	**158**	**144**	**132**	**113**	**99**
2,0	1,68	1,49	**298**	**255**	**224**	**199**	**179**	**163**	**149**	**128**	**112**
2,5	1,83	1,62	**324**	**278**	**243**	**216**	**194**	**177**	**162**	**139**	**122**
3,0	1,95	1,73	**346**	**297**	**260**	**231**	**208**	**189**	**173**	**148**	**130**
3,5	2,11	1,87	**374**	**321**	**281**	**249**	**224**	**204**	**187**	**160**	**140**
4,0	2,16	1,91	**382**	**327**	**287**	**255**	**229**	**208**	**191**	**164**	**143**

AMAZONE Spray table for 7-hole nozzle SJ7-06VP (grey)

Pres-sure	Nozzle output per dosing disc		AUS spray rate AHL (l/ha) /								
	Wasser	AHL	6	7	8	9	10	11	12	14	16
(bar)	(l/min)		km/h								
1,5	1,77	1,57	**314**	**269**	**236**	**209**	**188**	**171**	**157**	**135**	**118**
2,0	2,01	1,78	**356**	**305**	**267**	**237**	**214**	**194**	**178**	**153**	**134**
2,5	2,19	1,94	**388**	**333**	**291**	**259**	**233**	**212**	**194**	**166**	**146**
3,0	2,35	2,08	**416**	**357**	**312**	**277**	**250**	**227**	**208**	**178**	**156**
4,0	2,61	2,31	**562**	**396**	**347**	**308**	**277**	**252**	**231**	**198**	**173**

AMAZONE Spray table for 7-hole nozzle SJ7-08VP (white)

Pres-sure	Nozzle output per dosing disc		AUS spray rate AHL (l/ha) /								
	Wasser	AHL	6	7	8	9	10	11	12	14	16
(bar)	(l/min)		km/h								
1,5	2,28	2,02	**404**	**346**	**303**	**269**	**242**	**220**	**202**	**173**	**152**
2,0	2,66	2,35	**470**	**403**	**353**	**313**	**282**	**256**	**235**	**201**	**176**
2,5	2,94	2,60	**520**	**446**	**390**	**347**	**312**	**284**	**260**	**223**	**195**
3,0	3,15	2,79	**558**	**478**	**419**	**372**	**335**	**304**	**279**	**239**	**209**
4,0	3,46	3,06	**612**	**525**	**459**	**408**	**367**	**334**	**306**	**262**	**230**

16.2.3 Spray table for FD- nozzles

AMAZONE Spray table for FD-04- nozzle

Pres-sure	Nozzle output per dosing disc		AUS spray rate AHL (l/ha) /								
	Water	AHL	6	7	8	9	10	11	12	14	16
(bar)	(l/min)		km/h								
1,5	1,13	1,00	**200**	**171**	**150**	**133**	**120**	**109**	**100**	**86**	**75**
2,0	1,31	1,15	**230**	**197**	**173**	**153**	**138**	**125**	**115**	**99**	**86**
2,5	1,46	1,29	**258**	**221**	**194**	**172**	**155**	**141**	**129**	**111**	**97**
3,0	1,60	1,41	**282**	**241**	**211**	**188**	**169**	**154**	**141**	**121**	**106**
4,0	1,85	1,63	**326**	**279**	**245**	**217**	**196**	**178**	**163**	**140**	**122**

AMAZONE Spray table for FD-05- nozzle

Pres-sure	Nozzle output per dosing disc		AUS spray rate AHL (l/ha) /								
	Water	AHL	6	7	8	9	10	11	12	14	16
(bar)	(l/min)		km/h								
1,5	1,41	1,24	**248**	**213**	**186**	**165**	**149**	**135**	**124**	**106**	**93**
2,0	1,63	1,44	**288**	**247**	**216**	**192**	**173**	**157**	**144**	**123**	**108**
2,5	1,83	1,61	**322**	**276**	**242**	**215**	**193**	**176**	**161**	**138**	**121**
3,0	2,00	1,76	**352**	**302**	**264**	**235**	**211**	**192**	**176**	**151**	**132**
4,0	2,31	2,03	**406**	**348**	**305**	**271**	**244**	**221**	**203**	**174**	**152**

AMAZONE Spray table for FD-06- nozzle

Pres-sure	Nozzle output per dosing disc		AUS spray rate AHL (l/ha) /								
	Water	AHL	6	7	8	9	10	11	12	14	16
(bar)	(l/min)		km/h								
1,5	1,70	1,49	**298**	**255**	**224**	**199**	**179**	**163**	**149**	**128**	**112**
2,0	1,96	1,72	**344**	**295**	**258**	**229**	**206**	**188**	**172**	**147**	**129**
2,5	2,19	1,93	**386**	**331**	**290**	**257**	**232**	**211**	**193**	**165**	**145**
3,0	2,40	2,11	**422**	**362**	**317**	**282**	**253**	**230**	**211**	**181**	**158**
4,0	2,77	2,44	**488**	**418**	**366**	**325**	**293**	**266**	**244**	**209**	**183**

AMAZONE Spray table for FD-08- nozzle

Pres-sure	Nozzle output per dosing disc		AUS spray rate AHL (l/ha) /								
	Water	AHL	6	7	8	9	10	11	12	14	16
(bar)	(l/min)		km/h								
1,5	2,26	1,99	**398**	**341**	**299**	**265**	**239**	**217**	**199**	**171**	**149**
2,0	2,61	2,30	**460**	**394**	**345**	**307**	**276**	**251**	**230**	**197**	**173**
2,5	2,92	2,57	**514**	**441**	**386**	**343**	**308**	**280**	**257**	**220**	**193**
3,0	3,20	2,82	**563**	**483**	**422**	**375**	**338**	**307**	**282**	**241**	**211**
4,0	3,70	3,25	**650**	**557**	**488**	**433**	**390**	**355**	**325**	**279**	**244**

AMAZONE Spray table for FD-10- nozzle

Pres-sure	Nozzle output per dosing disc		AUS spray rate AHL (l/ha) /								
	Water	AHL	6	7	8	9	10	11	12	14	16
(bar)	(l/min)		km/h								
1,5	2,83	2,49	**498**	**427**	**374**	**332**	**299**	**272**	**249**	**214**	**187**
2,0	3,27	2,88	**576**	**494**	**432**	**384**	**345**	**314**	**288**	**246**	**216**
2,5	3,65	3,21	**642**	**551**	**482**	**429**	**385**	**350**	**321**	**275**	**241**
3,0	4,00	3,52	**704**	**604**	**528**	**469**	**422**	**384**	**352**	**302**	**264**
4,0	4,62	4,07	**813**	**697**	**610**	**542**	**488**	**444**	**407**	**348**	**305**

16.2.4 Spray table for drag hose unit

AMAZONE Spray table for dosing disc 4916-26, (dia. 0.65 mm)

Pres-sure	Nozzle output per dosing disc		AUS spray rate (l/ha) /								
	Water	AUS	6	7	8	9	10	11	12	14	16
(bar)	(l/min)		km/h								
1,0	0,20	0,18	**71**	**61**	**53**	**47**	**43**	**37**	**36**	**31**	**27**
1,2	0,22	0,19	**78**	**67**	**58**	**52**	**47**	**43**	**39**	**34**	**29**
1,5	0,24	0,21	**85**	**73**	**64**	**57**	**51**	**47**	**43**	**37**	**32**
1,8	0,26	0,23	**92**	**79**	**69**	**61**	**55**	**50**	**46**	**40**	**35**
2,0	0,28	0,25	**99**	**85**	**74**	**66**	**60**	**54**	**50**	**43**	**37**
2,2	0,29	0,26	**103**	**88**	**77**	**68**	**62**	**56**	**52**	**44**	**39**
2,5	0,31	0,27	**110**	**94**	**82**	**73**	**66**	**60**	**55**	**47**	**41**
2,8	0,32	0,28	**113**	**97**	**85**	**76**	**68**	**62**	**57**	**49**	**43**
3,0	0,34	0,30	**120**	**103**	**90**	**80**	**72**	**66**	**60**	**52**	**45**
3,5	0,36	0,32	**127**	**109**	**96**	**85**	**77**	**70**	**64**	**55**	**48**
4,0	0,39	0,35	**138**	**118**	**104**	**92**	**83**	**76**	**69**	**59**	**52**

AMAZONE Spray table with dosing disc 4916-32, (dia. 0.8 mm)

Pres-sure	Nozzle output per dosing disc		AUS spray rate (l/ha) /								
	Water	AUS	6	7	8	9	10	11	12	14	16
(bar)	(l/min)		km/h								
1,0	0,31	0,27	**110**	**94**	**82**	**73**	**66**	**60**	**55**	**47**	**41**
1,2	0,34	0,30	**120**	**103**	**90**	**80**	**72**	**66**	**60**	**52**	**45**
1,5	0,38	0,34	**135**	**115**	**101**	**90**	**81**	**74**	**68**	**58**	**51**
1,8	0,41	0,36	**145**	**124**	**109**	**97**	**87**	**79**	**73**	**62**	**55**
2,0	0,43	0,38	**152**	**130**	**114**	**101**	**92**	**83**	**76**	**65**	**57**
2,2	0,45	0,40	**159**	**137**	**119**	**106**	**96**	**87**	**80**	**69**	**60**
2,5	0,48	0,42	**170**	**146**	**127**	**113**	**102**	**93**	**85**	**73**	**64**
2,8	0,51	0,45	**181**	**155**	**135**	**120**	**109**	**98**	**91**	**78**	**68**
3,0	0,53	0,47	**188**	**161**	**141**	**125**	**113**	**103**	**94**	**81**	**71**
3,5	0,57	0,50	**202**	**173**	**151**	**135**	**121**	**110**	**101**	**87**	**76**
4,0	0,61	0,54	**216**	**185**	**162**	**144**	**130**	**118**	**108**	**93**	**81**

AMAZONE Spray table for dosing disc 4916-39, (dia. 1.0 mm) (standard)

Pres-sure	Nozzle output per dosing disc		AUS spray rate (l/ha) /								
	Water	AUS	6	7	8	9	10	11	12	14	16
(bar)	(l/min)		km/h								
1,0	0,43	0,38	**153**	**131**	**114**	**101**	**92**	**84**	**77**	**66**	**57**
1,2	0,47	0,41	**167**	**143**	**124**	**110**	**100**	**91**	**84**	**72**	**62**
1,5	0,53	0,47	**187**	**160**	**141**	**126**	**112**	**102**	**94**	**80**	**71**
1,8	0,58	0,51	**204**	**175**	**154**	**137**	**122**	**112**	**102**	**88**	**77**
2,0	0,61	0,53	**216**	**185**	**162**	**144**	**130**	**118**	**108**	**93**	**81**
2,2	0,64	0,56	**227**	**194**	**170**	**151**	**136**	**124**	**114**	**97**	**85**
2,5	0,68	0,59	**240**	**206**	**180**	**160**	**142**	**132**	**120**	**103**	**90**
2,8	0,71	0,62	**251**	**215**	**189**	**168**	**151**	**137**	**126**	**108**	**95**
3,0	0,74	0,64	**262**	**224**	**197**	**175**	**158**	**143**	**131**	**112**	**99**
3,5	0,79	0,69	**280**	**236**	**210**	**186**	**168**	**153**	**140**	**118**	**105**
4,0	0,85	0,74	**302**	**259**	**226**	**201**	**181**	**165**	**151**	**130**	**113**

AMAZONE Spray table for dosing disc 4916-45, (dia. 1.2 mm)

Pres-sure	Nozzle output per dosing disc		AUS spray rate (l/ha) /								
	Water	AUS	6	7	8	9	10	11	12	14	16
(bar)	(l/min)		km/h								
1,0	0,57	0,50	**202**	**173**	**151**	**135**	**121**	**110**	**101**	**87**	**76**
1,2	0,62	0,55	**219**	**188**	**165**	**146**	**132**	**120**	**110**	**94**	**83**
1,5	0,70	0,62	**248**	**212**	**186**	**165**	**149**	**135**	**124**	**106**	**93**
1,8	0,77	0,68	**273**	**234**	**204**	**182**	**164**	**148**	**137**	**117**	**102**
2,0	0,81	0,72	**287**	**246**	**215**	**192**	**172**	**157**	**144**	**123**	**108**
2,2	0,86	0,76	**304**	**261**	**228**	**203**	**183**	**166**	**152**	**131**	**114**
2,5	0,92	0,81	**326**	**279**	**244**	**217**	**196**	**178**	**163**	**140**	**122**
2,8	0,96	0,85	**340**	**291**	**255**	**227**	**204**	**186**	**170**	**146**	**128**
3,0	1,00	0,89	**354**	**303**	**266**	**236**	**213**	**193**	**177**	**152**	**133**
3,5	1,10	0,97	**389**	**334**	**292**	**260**	**234**	**213**	**195**	**167**	**146**
4,0	1,16	1,03	**411**	**352**	**308**	**274**	**246**	**224**	**206**	**176**	**154**

AMAZONE Spray table for dosing disc 4916-55, (dia. 1.4 mm)

Pres-sure	Nozzle output per dosing disc		AUS spray rate (l/ha) /								
	Water	AUS	6	7	8	9	10	11	12	14	16
(bar)	(l/min)		km/h								
1,0	0,86	0,76	**304**	**261**	**228**	**203**	**183**	**166**	**152**	**131**	**114**
1,2	0,93	0,82	**329**	**282**	**247**	**219**	**198**	**180**	**165**	**141**	**124**
1,5	1,05	0,93	**372**	**319**	**278**	**248**	**223**	**203**	**186**	**160**	**139**
1,8	1,15	1,02	**407**	**349**	**305**	**271**	**245**	**222**	**204**	**175**	**153**
2,0	1,22	1,08	**432**	**370**	**324**	**288**	**259**	**236**	**216**	**185**	**162**
2,2	1,27	1,12	**450**	**385**	**337**	**300**	**270**	**245**	**225**	**163**	**168**
2,5	1,35	1,19	**478**	**410**	**358**	**319**	**287**	**261**	**239**	**205**	**179**
2,8	1,43	1,27	**506**	**434**	**380**	**337**	**304**	**276**	**253**	**217**	**190**
3,0	1,47	1,30	**520**	**446**	**390**	**347**	**312**	**284**	**260**	**223**	**195**
3,5	1,59	1,41	**563**	**482**	**422**	**375**	**338**	**307**	**282**	**241**	**211**
4,0	1,69	1,50	**598**	**513**	**449**	**399**	**359**	**327**	**299**	**257**	**225**

16.3 Conversion table for spraying ammonium nitrate / urea solution (AUS) liquid fertiliser

(Density 1.28 kg/l, i.e. approx. 28 kg N for 100 kg of liquid fertiliser or 36 kg N for 100 litres of liquid fertiliser at 5 - 10 °C)

N kg	Sol. N l	Sol. N kg	N kg	Sol. N l	Sol. N kg	N kg	Sol. N l	Sol. N kg	N kg	Sol. N l	Sol. N kg
10	27.8	35.8	52	144.6	186.0	94	261.2	335.8	136	378.0	485.0
12	33.3	42.9	54	150.0	193.0	96	266.7	342.7	138	384.0	493.0
14	38.9	50.0	56	155.7	200.0	98	272.0	350.0	140	389.0	500.0
16	44.5	57.1	58	161.1	207.3	100	278.0	357.4	142	394.0	507.0
18	50.0	64.3	60	166.7	214.2	102	283.7	364.2	144	400.0	515.0
20	55.5	71.5	62	172.3	221.7	104	285.5	371.8	146	406.0	521.0
22	61.6	78.5	64	177.9	228.3	106	294.2	378.3	148	411.0	529.0
24	66.7	85.6	66	183.4	235.9	108	300.0	386.0	150	417.0	535.0
26	75.0	92.9	68	188.9	243.0	110	305.6	393.0	155	431.0	554.0
28	77.8	100.0	70	194.5	250.0	112	311.1	400.0	160	445.0	572.0
30	83.4	107.1	72	200.0	257.2	114	316.5	407.5	165	458.0	589.0
32	89.0	114.2	74	204.9	264.2	116	322.1	414.3	170	472.0	607.0
34	94.5	121.4	76	211.6	271.8	118	328.0	421.0	175	486.0	625.0
36	100.0	128.7	78	216.5	278.3	120	333.0	428.0	180	500.0	643.0
38	105.6	135.9	80	222.1	285.8	122	339.0	436.0	185	514.0	660.0
40	111.0	143.0	82	227.9	292.8	124	344.0	443.0	190	527.0	679.0
42	116.8	150.0	84	233.3	300.0	126	350.0	450.0	195	541.0	696.0
44	122.2	157.1	86	238.6	307.5	128	356.0	457.0	200	556.0	714.0
46	127.9	164.3	88	242.2	314.1	130	361.0	465.0			
48	133.3	171.5	90	250.0	321.7	132	367.0	471.0			
50	139.0	178.6	92	255.7	328.3	134	372.0	478.0			

AMAZONEN-WERKE
H. DREYER SE & Co. KG

Postfach 51
D-49202 Hasbergen-Gaste
Germany

Tel.:+ 49 (0) 5405 501-0
e-mail:amazone@amazone.de
http://www.amazone.de