Operating Manual

AMAZONE

Pantera 4503
with Comfort Package 2

Self-propelled field sprayer

(Euro 3A / Euro 5 Emission Standard)

MG6232
BAG0196.4 02.21
Printed in Germany

SmartLearning

Please read this operating manual before commissioning. Keep it in a safe place for future use.

en

Reading the instruction

manual and to adhere to it should not appear to be inconvenient and superfluous as it is not enough to hear from others and to realise that a machine is good, to buy it and to believe that now everything would work by itself. The person concerned would not only harm himself but also make the mistake of blaming the machine for the reason of a possible failure instead of himself. In order to ensure a good success one should go into the mind of a thing or make himself familiar with every part of the machine and to get acquainted with its handling. Only this way, you would be satisfied both with the machine as also with yourself. To achieve this is the purpose of this instruction manual.

Leipzig-Plagwitz 1872.

Identification data

Please insert the identification data of the machine. The identification data are arranged on the type plate.

Machine ID No.: (10-digit)	
Type:	Pantera 4503
Year of manufacture:	
Basic weight (kg):	
Permissible total weight (kg):	
Maximum load (kg):	
Engine number	

Manufacturer's address

AMAZONEN-WERKE

H. DREYER GmbH & Co. KG

Postfach 51

D-49202 Hasbergen, Germany

Tel.: + 49 (0) 5405 50 1-0

E-mail: amazone@amazone.de

Spare part orders

Spare parts lists are freely accessible in the spare parts portal at www.amazone.de.

Please send orders to your AMAZONE dealer.

Formalities of the operating manual

Document number: MG6232

Compilation date: 02.21

© Copyright AMAZONEN-WERKE H. DREYER GmbH & Co. KG, 2021

All rights reserved.

Reprinting, even of sections, permitted only with the approval of AMAZONEN-WERKE H. DREYER GmbH & Co. KG.

Foreword

Dear Customer,

You have chosen one of the quality products from the wide product range of AMAZONEN-WERKE, H. DREYER GmbH & Co. KG. We thank you for your confidence in our products.

On receiving the machine, check to see if it has been damaged during transport or if parts are missing. Using the delivery note, check that the machine has been delivered in full, including any special equipment ordered. Damage can only be rectified if problems are signalled immediately.

Before commissioning, read and understand this operating manual, and particularly the safety information. Only after careful reading will you be able to benefit from the full scope of your newly purchased machine.

Please ensure that all the machine operators have read this operating manual before the machine is commissioned.

Should you have any questions or problems, please consult this operating manual or contact your local service partner.

Regular maintenance and timely replacement of worn or damaged parts increases the lifespan of your machine.

User evaluation

Dear Reader,

We update our operating manuals regularly. Your suggestions for improvement help us to create ever more user-friendly manuals.

AMAZONEN-WERKE

H. DREYER GmbH & Co. KG

Postfach 51

D-49202 Hasbergen, Germany

Tel.: + 49 (0) 5405 50 1-0

E-mail: amazone@amazone.de

1 User Information 10
1.1 Purpose of the document 10
1.2 Locations in the operating manual 10
1.3 Diagrams 10

2 General Safety Instructions 11
2.1 Obligations and liability 11
2.2 Representation of safety symbols 13
2.3 Organisational measures 14
2.4 Safety and protection equipment 14
2.5 Informal safety measures 14
2.6 User training 15
2.7 Safety measures in normal operation 16
2.8 Danger from residual energy 16
2.9 Maintenance and repair work, fault elimination 16
2.10 Design changes 16
2.10.1 Spare and wear parts and aids 17
2.11 Cleaning and disposal 17
2.12 User workstation 17
2.13 Warning symbols and other signs on the machine 18
2.13.1 Positions of warning symbols and other labels 19
2.14 Potential risks from not observing the safety instructions 27
2.15 Safety-conscious working 27
2.16 Safety information for users 28
2.16.1 General safety and accident prevention information 28
2.16.2 Hydraulic system 30
2.16.3 Electrical system 31
2.16.4 Brake system 32
2.16.5 Tyres 32
2.16.6 Field sprayer operation 33
2.16.7 Cleaning, maintenance and repair 34

3 Loading 35

4 Product description 36
4.1 Overview of the assemblies 37
4.2 Operating instructions and third party documentation 38
4.3 Safety and protection equipment 39
4.4 Transportation equipment 40
4.5 Intended use 41
4.6 Regular device inspections 42
4.7 Consequences of using certain crop protection agents 42
4.8 Danger areas and danger points 43
4.9 Rating plate and CE mark 44
4.10 Conformity 44
4.11 Technically possible maximum application rate 44
4.12 Maximum permissible application rate for crop protection products 45
4.13 Technical data 46
4.13.1 Dimensions 46
4.13.2 Payload 46
4.13.3 Technical data spraying system 50
4.13.4 Residual amounts 52
4.13.5 Technical data, carrier vehicle 54
4.13.6 Emission values according to noise and vibration health & safety regulations 55

5 Structure and function, carrier vehicle ... 56

5.1 Drive ... 56
5.1.1 Driving-in the engine ... 56
5.1.2 Engine fuel system ... 57
5.1.3 Lufteinlasssystem des Motors ... 58
5.1.4 Cooling system oft the engineMotors ... 59
5.2 Exhaust gas treatment ... 59
5.2.1 Diesel particle filter ... 59
5.2.2 Reduction of the nitrogen oxides in the exhaust gas (SCR) ... 60
5.3 Running gear ... 61
5.3.1 Hydraulic track width adjustment ... 61
5.4 Pantera-W with maximum track width of 3 metres ... 62
5.5 Pantera H with hydraulic height adjustment ... 63
5.6 Steering ... 64
5.6.1 Perform a track correction ... 65
5.7 Traction control system ... 66
5.8 Wheel gears ... 66
5.9 Mudguards ... 66
5.10 Hydro-pneumatic spring suspension ... 67
5.11 Brake system ... 68
5.12 Foldable wheel chocks ... 68
5.13 Hydraulic system ... 69
5.13.1 Hydraulic pumps ... 70
5.13.2 Hydraulic wheel motors and gearbox ... 70
5.13.3 Hydraulic oil tank ... 70
5.14 Radiator ... 71
5.15 Driver's cabin ... 72
5.15.1 Foldable access ladder ... 73
5.15.2 Steering column with multi-function switch and brake pedal ... 74
5.15.3 Adjusting the driver's seat ... 76
5.15.4 Control panel ... 77
5.15.5 Emergency shutdown ... 79
5.15.6 Operating elements, Comfort and Light ... 79
5.15.7 Operating elements, Safety and Maintenance ... 80
5.15.8 Rear right side in the cabin ... 81
5.15.9 Armrest ... 82
5.15.10 Cooling compartment and ashtray ... 82
5.15.11 AmaTron / AmaPad control terminal to control the field sprayer ... 83
5.15.12 Driving lever with multi-function stick ... 84
5.15.13 Driving lever ... 84
5.15.14 AmaPilot+ multi-function stick ... 84
5.15.15 Air conditioner ... 87
5.15.16 Tractor cab air filtration with Category 4 safety status ... 89
5.15.17 Covers and compartments outside the cabin ... 92
5.16 Camera system (option) ... 94
5.17 Working platform with ladder ... 95
5.18 Drawbar for trailers ... 97
5.18.1 Coupling the trailer ... 99
5.18.2 Uncoupling the trailer ... 99

6 Construction and function of the field sprayer ... 100

6.1 Functionality of the field sprayer ... 100
6.2 Overview control terminal ... 101
6.3 Explanation for the valve chest ... 102
6.4 Agitators ... 104
6.5 Suction hose for filling the spray liquid tank / flushing water tank ... 105
6.6 Filling connection for pressure filling of the spray liquid tank ... 106

6.7 Filter equipment 107
6.8 Flushing water tank 110
6.9 Induction bowl with filling connection for Ecofill and canister flushing 111
6.10 Hand wash tank 113
6.11 Pumps 114
6.12 Sprayer boom 115
6.12.1 Super-L boom 117
6.12.2 Sprayer boom with Flex-folding 120
6.12.3 Reduction joint on the outer boom (optional) 122
6.13 Spray lines 123
6.14 Nozzles 125
6.14.1 Multiple nozzles 125
6.14.2 Edges nozzles 128
6.15 Automatic single nozzle control (optional) 129
6.15.1 Single nozzle control AmaSwitch 129
6.15.2 4-way AmaSelect single nozzle control 129
6.16 Application rate increase with HighFlow+ 131
6.17 Special optional equipment for liquid fertiliser 132
6.17.1 Three-ray nozzles 132
6.17.2 7 hole nozzles / FD nozzles (optional) 133
6.17.3 Drag hose equipment for Super-L boom (optional) 134
6.18 Exterior wash down kit 135
6.19 Lift module 136
6.20 Control terminal cover 137
6.21 Accessories for protecting the plants 138

7 AmaDrive vehicle terminal 139
7.1 Indicator lights 140
7.2 Touch sensitive function fields 141
7.3 Instrument panel 142
7.4 Main menu 143
7.4.1 Menu structure overview 144
7.5 Drive submenu 145
7.6 Running gear submenu 146
7.6.1 Height adjustment Pantera H 148
7.7 Sprayer submenu 149
7.7.1 Agitator 151
7.7.1 Comfort operation with sub-menus 151
7.7.2 Filling 154
7.8 Work lights, submenu 155
7.9 Operating data 156
7.10 Configuration 158
7.11 Error messages 162

8 Filling terminal 163

9 Start-up 164
9.1 Antifreeze in the spray liquid tank 164
9.2 Securing machine against accidental starting and rolling 164

10 Driving on public roads 165
10.1 Requirements for driving on public roads 167

11 Driving with the Pantera 168
11.1 Entering and exiting the cab 168
11.2 Starting the engine 168
11.3 Driving with the machine 168

11.3.1 Road travelling / field travelling ... 170
11.4 Stopping the engine ... 171

12 Using the field sprayer ... 172

12.1 Using the machine with comfort package 2 ... 173
12.2 Preparing the spray liquid ... 174
12.2.1 Calculating the filling and re-fill quantity ... 178
12.2.2 Filling table for remaining spray area ... 179
12.2.3 Filling the spray liquid tank via the suction port ... 180
12.2.4 Filling the spray liquid tank through the pressure connection ... 182
12.2.5 Filling the flushing water tank ... 183
12.2.6 Flushing agents via the induction bowl ... 184
12.2.7 Spray agent suction from containers ... 186
12.3 Spraying operation ... 187
12.3.1 Applying the spray liquid ... 189
12.3.2 Drift reduction measures ... 190
12.3.3 Dilute the spray liquid with rinsing water ... 191
12.4 Residual amounts ... 193
12.4.1 Disposing of the residues ... 193
12.4.2 Emptying the spray liquid tank using the pump ... 194
12.5 Cleaning the implement after operation ... 195
12.5.1 Cleaning the sprayer with the tank empty ... 196
12.5.2 Draining the final residue ... 198
12.5.3 XtremeClean high-pressure cleaning ... 199
12.5.4 Cleaning the suction filter ... 201
12.5.5 Cleaning the pressure filter ... 202
12.5.6 Exterior cleaning ... 204
12.5.7 Cleaning the sprayer during a critical agent change ... 204
12.5.8 Contact of the implement with liquid fertiliser ... 204
12.5.9 Flushing the sprayer boom when the spray liquid tank is full ... 205

13 Faults ... 206

13.1 Towing, salvaging, evacuating the machine ... 206
13.2 AMADRIVE faults and warning messages ... 208
13.3 Malfunctions during spraying operation ... 210

14 Cleaning, maintenance and repair ... 211

14.1 Cleaning ... 213
14.2 Winter storage and long periods out of operation ... 214
14.3 Maintenance schedule ... 217
14.4 Maintenance work with the engine running ... 222
14.5 Hydro-pneumatic pressure reservoir ... 222
14.6 Lubrication specifications ... 223
14.6.1 Central lubrication ... 225
14.7 Maintenance of the carrier vehicle ... 226
14.7.1 Oils and operating fluids ... 226
14.7.2 Cleaning the engine cooler and air conditioning condenser ... 228
14.7.3 Wheel gears ... 229
14.7.4 Tyres / wheels ... 230
14.7.5 Brakes ... 232
14.7.6 Hydraulic part of brake system ... 234
14.7.7 Hydraulic system ... 239
14.7.8 Hydraulic oil ... 243
14.7.9 Control ... 245
14.7.10 Air conditioner ... 249
14.8 Settings on the unfolded sprayer boom ... 252
14.9 Electro hydraulic boom ... 253
14.9.1 Pumps ... 254
14.9.2 Checking and replacing the suction and pressure-side valves (workshop work) ... 255

14.9.3 Checking and replacing the piston diaphragm (workshop work) 256
14.10 Checking and exchanging the pressure reservoir diaphragm (workshop task) 257
14.10.1 Calibrate the flow meter 258
14.11 Eliminating limescale in the system 259
14.12 Metering the field sprayer 260
14.13 Cleaning the flushing water suction filter 262
14.14 Nozzles 263
14.14.1 Line filter 264
14.14.2 Instructions on testing the field sprayer 265

15 Diagrams and overviews 266

15.1 Liquid circuit Comfort package 2 / part width section control 266
15.2 Liquid circuit Comfort package 2 / single nozzle control 267
15.3 Hydraulic diagrams 269
15.4 Pneumatic diagram 272
15.5 Overview of fuses and relay 273
15.5.1 Fuses on the central electrics under the arm rest 273
15.5.2 Fuses and relay in the cabin roof 278
15.5.3 New relay behind the seat 281
15.5.4 Boom fuses and relays on the control panel 282
15.5.5 Boom illumination in the cab, rear right 283
15.6 Screw tightening torques 284

16 Spray table 285

16.1 Spray tables for flat-fan, anti-drift, injector and airmix nozzles, spraying height 50 cm 285
16.2 Spraying nozzles for liquid manure 289
16.2.1 Spray table for three-ray nozzles, spraying height 120 cm 289
16.2.2 Spray table for 7-hole nozzles 290
16.2.3 Spray table for FD- nozzles 292
16.2.4 Spray table for drag hose unit 293
16.3 Conversion table for spraying ammonium nitrate / urea solution (AUS) liquid fertiliser 296

1 User Information

The User Information section provides information on use of the operating manual.

1.1 Purpose of the document

This operating manual

- describes the operation and maintenance of the machine.
- provides important information on safe and efficient handling of the machine.
- is a component part of the machine and should always be kept with the machine or the towing vehicle.
- Keep it in a safe place for future use.

1.2 Locations in the operating manual

All the directions specified in the operating manual are always seen in the direction of travel.

1.3 Diagrams

Instructions and responses

Activities to be carried out by the user are given as numbered instructions. Always keep to the order of the instructions. The reaction to instructions is given by an arrow.

Example:

1. Instruction 1

→ Machine response to instruction 1

2. Instruction 2

Lists

Lists without an essential order are shown as a list with bullets.

Example:

- Point 1
- Point 2

Item numbers in diagrams

Numbers in round brackets refer to items in diagrams. The first number refers to the diagram and the second number to the item.

Example: (Fig. 3/6)

- Figure 3
- Item 6

2 General Safety Instructions

This section contains important information on safe operation of the machine.

2.1 Obligations and liability

Comply with the instructions in the operating manual

Knowledge of the basic safety information and safety regulations is a basic requirement for safe handling and fault-free machine operation.

Obligations of the operator

The operator is obliged only to let those people work with/on the machine who

- are aware of the basic workplace safety information and accident prevention regulations.
- have been instructed in working with/on the machine.
- have read and understood this operating manual.

The operator is obliged

- to keep all the warning symbols on the machine in a legible state.
- to replace damaged warning symbols.

If you still have queries, please contact the manufacturer.

Obligations of the user

Before starting work, anyone charged with working with/on the machine is obliged

- to comply with the basic workplace safety instructions and accident prevention regulations.
- to read and follow the "General safety information" section of this operating manual.
- to read the section "Warning symbols and other labels on the machine" (page 18) of this operating manual and to follow the safety instructions represented by the warning symbols when operating the machine.
- To get to know the machine.
- To read the sections of this operating manual, important for carrying out your work.

If the user discovers that a function is not working properly, then they must eliminate this fault immediately. If this is not the task of the user or if the user does not possess the appropriate technical knowledge, then they should report this fault to their superior (operator).

Risks in handling the machine

The machine has been constructed to the state-of-the art and the recognised rules of safety. However, operating the machine may cause risks and restrictions to

- the health and safety of the user or third parties,
- the machine,
- other property.

Only use the machine

- for the purpose for which it was intended.
- in a perfect state of repair.

Eliminate any faults immediately which could impair safety.

Guarantee and liability

Our "General conditions of sales and delivery" are always applicable. These shall be available to the operator, at the latest on conclusion of the contract. Guarantee and liability claims for damage to people or property will be excluded if they can be traced back to one or more of the following causes:

- Improper use of the machine.
- Improper installation, commissioning, operation and maintenance of the machine.
- Operation of the machine with defective safety equipment or improperly attached or non-functioning safety equipment.
- Non-compliance with the instructions in the operating manual regarding commissioning, operation and maintenance.
- Unauthorised design changes to the machine.
- Insufficient monitoring of machine parts which are subject to wear.
- Improperly executed repairs.
- Disasters through the impact of foreign bodies and Acts of God.

2.2 Representation of safety symbols

Safety instructions are indicated by the triangular safety symbol and the highlighted signal word. The signal word (danger, warning, caution) describes the severity of the risk, and carries the following meaning:

DANGER

Indicates an immediate high risk which will result in death or serious physical injury (loss of body parts or long term damage) if not avoided.

If the instructions are not followed, then this will result in immediate death or serious physical injury.

WARNING

Indicates a medium risk, which could result in death or (serious) physical injury if not avoided.

If the instructions are not followed, then this may result in death or serious physical injury.

CAUTION

Indicates a low risk which could cause minor or medium level physical injury or damage to property if not avoided.

IMPORTANT

Indicates an obligation to special behaviour or an activity required for proper machine handling.

Non-compliance with these instructions can cause faults on the machine or disturbance to the environment.

NOTE

Indicates handling tips and particularly useful information.

These instructions will help you to use all the functions of your machine in the best way possible.

2.3 Organisational measures

The operator must provide the necessary personal protective equipment as per the information provided by the manufacturer of the crop protection agent to be used, such as:

- Safety glasses;
- Protective shoes
- Chemical-resistant overalls,
- Skin protection agents, etc.

The operating manual

- Must always be kept at the place at which the machine is operated.
- Must always be easily accessible for the user and maintenance personnel.

Check all the available safety equipment regularly.

2.4 Safety and protection equipment

Before starting up the machine each time, all the safety and protection equipment must be properly attached and fully functional. Check all safety and protection equipment regularly.

Faulty safety equipment

Faulty or disassembled safety and protection equipment can lead to dangerous situations.

2.5 Informal safety measures

As well as all the safety information in this operating manual, comply with the general, national regulations pertaining to accident prevention and environmental protection.

When driving on public roads and routes you should comply with the statutory road traffic regulations.

2.6 User training

Only those people who have been trained and instructed may work with/on the machine. The operator must clearly specify the responsibilities of the people charged with operation and maintenance work.

People being trained may only work with/on the machine under the supervision of an experienced person.

Activity \ Person	Person specially trained for the activity [1]	Trained person [2]	Persons with specialist training (specialist workshop) [3]
Loading/Transport	X	X	X
Start-up	--	X	--
Set-up, tool installation	--	--	X
Operation	--	X	--
Maintenance	--	--	X
Troubleshooting and fault elimination	--	X	X
Disposal	X	--	--

Legend: X..permitted --..not permitted

[1] A person who can assume a specific task and who can carry out this task for an appropriately qualified company.

[2] Instructed persons are those who have been instructed in their assigned tasks and in the possible risks in the case of improper behaviour, have been trained if necessary, and have been informed about the necessary protective equipment and measures.

[3] People with specialist technical training shall be considered as a specialist. Due to their specialist training and their knowledge of the appropriate regulations, they can evaluate the work with which they have been charged and detect possible dangers.

Comment:

A qualification equivalent to specialist training can be obtained from several years' experience in the relevant field.

If maintenance and repair work on the machine is additionally marked "Workshop work", only a specialist workshop may carry out such work. The personnel of a specialist workshop shall possess the appropriate knowledge and suitable aids (tools, lifting and support equipment) for carrying out the maintenance and repair work on the machine in a way which is both appropriate and safe.

2.7 Safety measures in normal operation

Only operate the machine if all the safety and protection equipment is fully functional.

Check the machine at least once a day for visible damage and check the function of the safety and protection equipment.

2.8 Danger from residual energy

Note that there may be residual mechanical, hydraulic, pneumatic and electrical/electronic energy on the machine.

Use appropriate measures to inform the operating personnel. You can find detailed information in the relevant sections of this operating manual.

2.9 Maintenance and repair work, fault elimination

Carry out prescribed setting, maintenance and inspection work in good time.

Secure all media such as compressed air and the hydraulic system against unintentional start-up.

Carefully fix and secure larger assemblies to lifting gear when carrying out replacement work.

Regularly check that bolted connections are firmly secured and tighten if necessary.

When the maintenance work is completed, check the function of the safety devices.

2.10 Design changes

You may make no changes, expansions or modifications to the machine without the authorisation of AMAZONEN-WERKE. This also applies when welding support parts.

Any expansion or modification work shall require the written approval of AMAZONEN-WERKE. Only use modification and accessory parts approved by AMAZONEN-WERKE so that the type approval, for example, remains valid in accordance with national and international regulations.

Vehicles with an official type approval or with equipment connected to a vehicle with a valid type approval or approval for road transport according to the German road traffic regulations must be in the state specified by the approval.

WARNING

Risk of crushing, cutting, being trapped or drawn in, or impact through the failure of support parts.

It is strictly forbidden to

- drill holes in the frame or on the running gear.
- increase the size of existing holes on the frame or the running gear.
- weld support parts.

2.10.1 Spare and wear parts and aids

Immediately replace any machine parts which are not in a perfect state.

Only use genuine AMAZONE spare and wear parts, or those approved by AMAZONEN-WERKE, so that the type approval remains valid according to the national and international regulations. If you use wear and spare parts from third parties, there is no guarantee that they have been designed and manufactured in such a way as to meet the requirements placed on them.

AMAZONEN-WERKE shall accept no liability for damage caused by the use of non-approved spare and wear parts or aids.

2.11 Cleaning and disposal

Handle and dispose of any materials used carefully, in particular

- when carrying out work on lubrication systems and equipment and
- when cleaning using solvents.

2.12 User workstation

The machine may only be operated by one person sitting in the driver's seat of the tractor.

Otherwise no other person must remain in the cabin or on the machine when driving.

The helpers seat must only be used for manoeuvring trips.

Drive the machine only when wearing the seat belt.

2.13 Warning symbols and other signs on the machine

Always keep all the warning pictograms of the machine clean and in a legible state. Replace illegible warning pictograms. You can obtain the warning symbols from your dealer using the order number (e.g. MD 078).

Warning symbols - structure

Warning symbols indicate danger areas on the machine and warn against residual dangers. At these points, there are permanent or unexpected dangers.

A warning symbol consists of two fields:

Field 1

is a symbol describing the danger, surrounded by triangular safety symbol.

Field 2

is a symbol showing how to avoid the danger.

Warning symbols - explanation

The column **Order number and explanation** provides an explanation of the neighbouring warning symbol. The description of the warning symbols is always the same and specifies, in the following order:

1. A description of the danger.

   For example: risk of cutting

2. The consequence of non-compliance with the risk avoidance instructions.

   For example: causes serious injuries to fingers or hands.

3. Risk avoidance instructions.

   For example: only touch machine parts when they have come to a complete standstill.

2.13.1 Positions of warning symbols and other labels

Warning symbols

The following diagrams show the arrangement of the warning symbols on the machine.

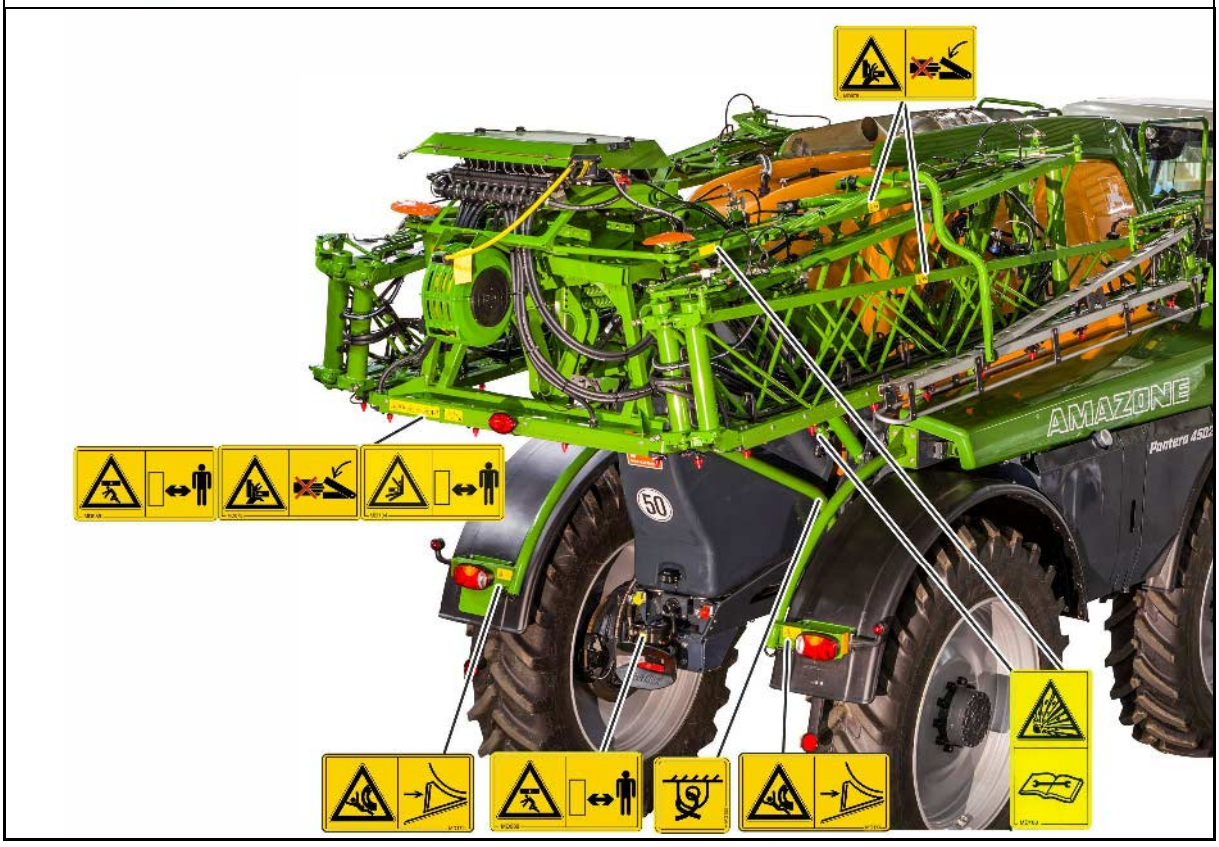

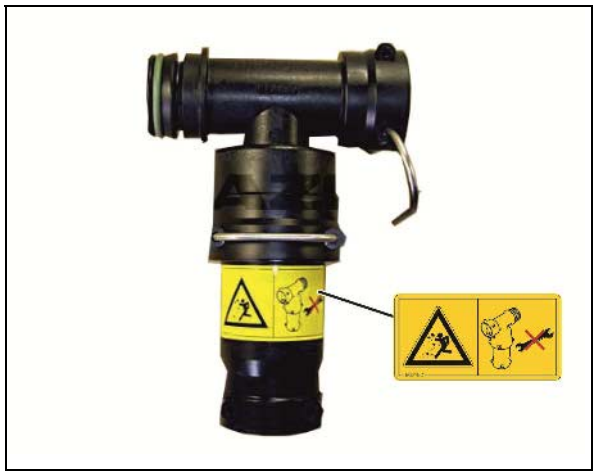

Order No. and explanation	Warning symbols
MD 078 **Risk of crushing fingers or hands by accessible moving machine parts.** This danger causes serious injuries, including loss of body parts such as fingers or hand. Never reach into the danger area while the tractor engine is running and the PTO shaft / hydraulic system is connected.	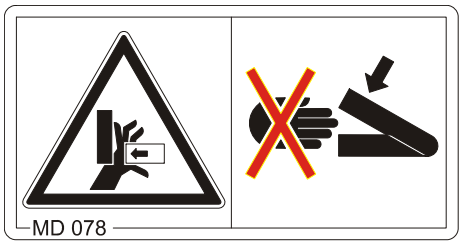
MD 082 **Danger of falling from treads and platforms when riding on the machine.** This danger causes serious or potentially fatal injuries anywhere on the body. It is forbidden to ride on the machine and/or climb the machine while it is running. This also applies to machines with treads or platforms. Make sure that nobody is riding on the machine.	
MD 084 **Risk of crushing the entire body due to standing in the swivel range when machine parts are being lowered.** Causes serious, potentially fatal injuries anywhere on the body. • It is forbidden to stand in the swivel range of the machine when machine parts are being lowered. • Instruct personnel to leave the swivel range of any machine parts which can be lowered before you lower the parts.	
MD 089 **Risk of crushing the entire body due to standing under suspended loads or raised machine parts.** Causes serious, potentially fatal injuries anywhere on the body. • It is forbidden to stand under suspended loads or raised machine parts. • Maintain an adequate safety distance from any suspended loads or raised machine parts. • Ensure that all personnel maintain an adequate safety distance from suspended loads or raised machine parts.	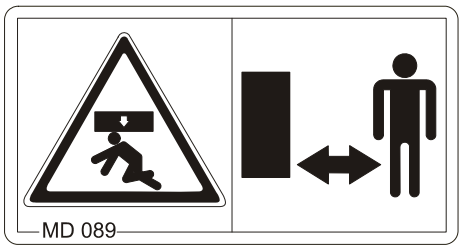

MD 094

Risk of electric shock or burns from accidentally touching overhead power lines or by coming within the prohibited distance of high voltage overhead power lines.

These dangers can cause extremely serious and potentially fatal injuries.

Maintain a sufficient distance from electrical overhead cables when swinging any parts of the machine in and out.

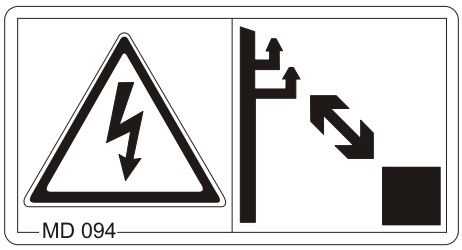

Nominal voltage	Safety distance from transmission lines
up to 1 kV	1 m
over 1 up to 110 kV	2 m
over 110 up to 220 kV	3 m
over 220 up to 380 kV	4 m

MD 099

Risk of contact with hazardous materials due to improper handling.

Causes serious, potentially fatal injuries anywhere on the body.

Before coming into contact with hazardous materials, put on protective clothing. Follow the manufacturer's safety instructions for the materials to be processed

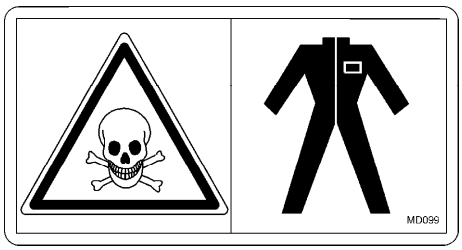

MD 100

This symbol indicates the lifting gear attachment points used for loading of the implement.

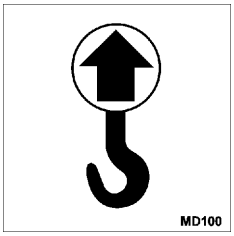

MD101

This symbol indicates jacking points for lifting gear (jack).

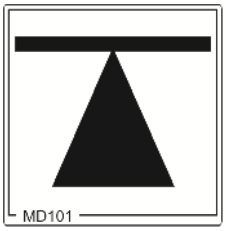

MD 104

Risk of crushing the entire body or impacts due to standing in the swivel range of laterally moving implement parts.

These dangers can cause extremely serious and potentially fatal injuries.

- Maintain an adequate safety distance from moving implement parts while the tractor engine is running.
- Ensure that all personnel maintain an adequate safety distance from moving implement parts.

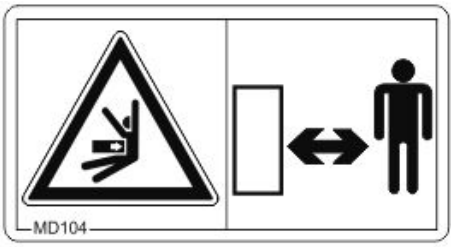

MD 108

Risk of explosion, or danger from hydraulic fluid escaping under high pressure, caused by the pressure accumulator which is under pressure from gas and oil.

These dangers can cause serious and potentially fatal injuries if highly pressurised, escaping hydraulic fluid penetrates the skin and passes into the body.

- Read and observe the instructions in the operating manual before carrying out any maintenance or repair work.
- If you are injured by hydraulic fluid, contact a doctor immediately.

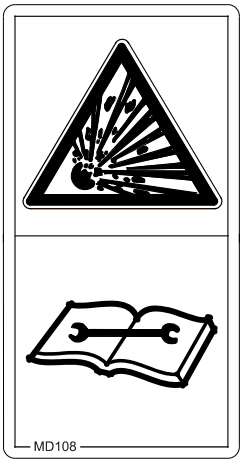

MD 114

This symbol indicates a lubrication point

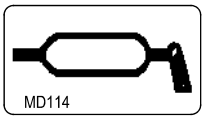

MD 155

This icon designates the restraint points for tieing the machine to a transport vehicle allowing the machine to be transported in a safe manner.

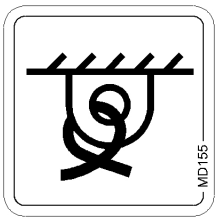

MD 159

Only fill the hand wash tank with clear fresh water, and never with crop protection agents!

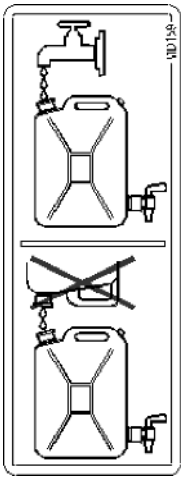

MD 173

Risk of breathing in hazardous materials via poisonous vapours from the spray liquid tank.

This danger can cause extremely serious and potentially fatal injuries.

Never climb into the spray liquid tank.

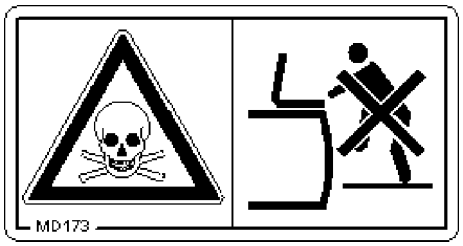

MD 174

Danger from unintended continued movement of the machine.

Causes serious, potentially fatal injuries anywhere on the body.

S ecure the implement against unintentionally rolling away.

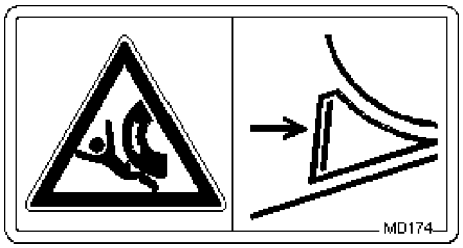

MD 175

The torque for the bolt connection is 450 Nm.

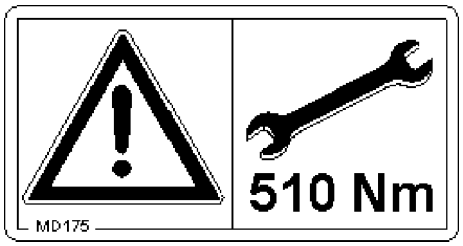

MD 192

Danger of fluids escaping under high pressure while working on hoses and connections under pressure!

This danger can result in severe injuries to the entire body.

It is not allowed to work on this component.

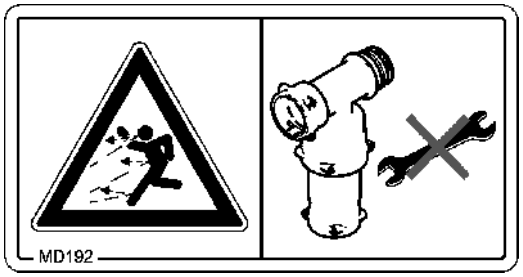

MD208

Hazard caused by falling down from the machine when leaving the cabin resulting from the ladder not being slewed down!

This danger can result in extremely serious injuries.

Slew down the ladder before leaving the cabin.

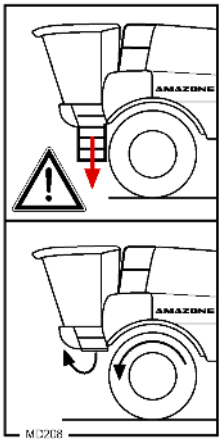

MD 210

Danger from intervention in the machine, e.g. installation, adjusting, troubleshooting, cleaning, maintaining and repairing, due to the tractor and the machine being started unintentionally and rolling.

These dangers can cause extremely serious and potentially fatal injuries.

- Secure the tractor and the machine against unintentional start-up and rolling before any intervention in the machine.
- Depending on the type of intervention, read and understand the information in the relevant sections of the operating manual.

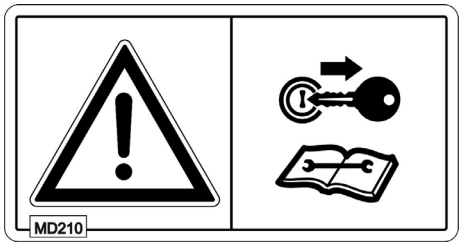

MD 211

Read and follow the operating manual and safety information before starting up the machine!

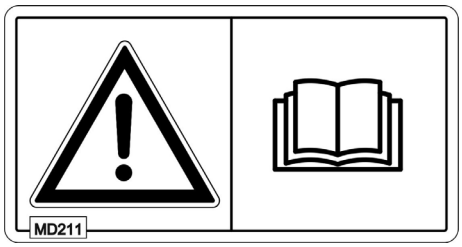

MD 212

Danger from escaping high-pressure hydraulic fluid due to leaking hydraulic hose lines.

This danger may cause serious injuries, perhaps even resulting in death, if escaping high-pressure hydraulic fluid passes through the skin and into the body.

- Never attempt to plug leaks in hydraulic hose lines with your hand or fingers.
- Read and observe the information in the operating manual before carrying out maintenance work on the hydraulic hose lines.
- If you are injured by hydraulic fluid, contact a doctor immediately.

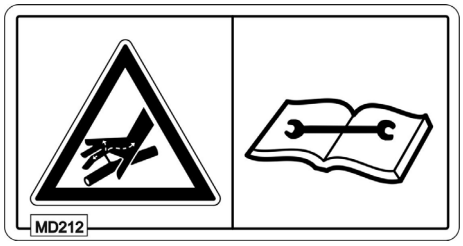

MD 224

Risk of contact with hazardous materials due to improper use of clear fresh water from the hand wash tank.

This danger can cause extremely serious and potentially fatal injuries.

Never use the clear water from the hand wash tank as drinking water.

2.14 Potential risks from not observing the safety instructions

Non-compliance with the safety information

- can pose both a danger to people and also to the environment and machine.
- can lead to the loss of all warranty claims.

In particular, non-compliance with the safety information could pose the following risks:

- Danger to people through non-secured working areas.
- Failure of important machine functions.
- Failure of prescribed methods of maintenance and repair.
- Danger to people through mechanical and chemical influences.
- Risk to the environment through leakage of hydraulic fluid.

2.15 Safety-conscious working

Besides the safety information in this operating manual, the generally applicable national workplace safety and accident prevention regulations are binding.

Comply with the accident prevention instructions on the warning pictograms.

When driving on public roads and routes, comply with the appropriate statutory road traffic regulations.

2.16 Safety information for users

WARNING

Risk of crushing, cutting, being trapped or drawn in, or impact through inadequate roadworthiness and operational safety.

Before starting up the machine and the tractor, always check their roadworthiness and operational safety.

2.16.1 General safety and accident prevention information

- Beside these instructions, comply with the generally applicable national safety and accident prevention regulations.
- The warning symbols and other labels attached to the machine provide important information on safe machine operation. Compliance with this information is in the interests of your safety.
- Before moving off and starting up the machine, check the immediate area of the machine (children). Ensure that you can see clearly.
- Drive in such a way that you always have full control over the tractor with the attached machine.

  In so doing, take your personal abilities into account, as well as the road, traffic, visibility and weather conditions, the driving characteristics of the tractor and the connected machine.

Use of the machine

- Before the engine is started, convince yourself that all drives are switched off.
- Before starting work, ensure that you understand all the equipment and actuation elements of the machine and their function. There is no time for this when the machine is already in operation.
- Do not wear loose-fitting clothing. Loose clothing increases the risk of being caught by the drive shaft.
- Only start-up the machine, when all the safety equipment has been attached and is in the safety position.
- Before starting work on the machine, check for damage or wear as well as leaking coolant or spray fluids. Check nuts and bolts regularly for tightness and re-tighten if necessary
- Comply with the maximum load for the machine. If necessary, drive only with a partially filled tank.
- The driving behaviour of the machine is influenced by the weight in the tank.
- It is forbidden to stand in the working area of the machine.
- It is forbidden to stand in the turning and swivel range of the machine.• There are crushing and cutting points at externally-actuated (e.g. hydraulic) machine points.
- Only actuate externally-actuated machine parts when you are sure that no-one is standing within the prescribed safety distance.

- Take note of the working width when driving the machine, no obstacles should be in the way especially when driving on headlands with the sprayer boom folded out.
- Before leaving the tractor, secure it against unintended starting and rolling.

  To do this:
  - o apply the parking brake
  - o switch off the engine
  - o remove the ignition key
- Operation of the machine is carried out only when sitting down.
- Use only those fuels specified according to DIN / EN 590.

Driving on public roads

- When using public roads, national road traffic regulations must be observed.
- Adjust your driving speed to the prevailing conditions.
- Drive with great care in case of narrow track widths!
- Before starting up the machine each time, always check their traffic and operational safety.

2.16.2 Hydraulic system

- The hydraulic system is under a high pressure.
- Before working on the hydraulic system,
  - depressurise the hydraulic system
  - shut off the tractor engine
  - apply the parking brake
  - remove the ignition key
- Have the hydraulic hose lines checked at least once a year by a specialist for proper functioning.
- Replace the hydraulic hose line if it is damaged or worn. Only use genuine AMAZONE hydraulic hose lines.
- The hydraulic hose lines should not be used for longer than six years. This period includes any storage time of a maximum of two years. Even with proper storage and approved use, hoses and hose connections are subject to natural ageing, thus limiting the length of use. However, it may be possible to specify the length of use from experience values, in particular when taking the risk potential into account. In the case of hoses and hose connections made from thermoplastics, other guide values may be decisive.
- Never attempt to plug leaks in hydraulic hose lines with your hand or fingers.

  Escaping high pressure fluid (hydraulic fluid) may pass through the skin and ingress into the body, causing serious injuries.

  If you are injured by hydraulic fluid, contact a doctor immediately. Risk of infection.
- When searching for leakage points, use suitable aids, to avoid the serious risk of infection.
- The pressure accumulator in the system is always under pressure (gas and oil). Thus, take care that they are not damaged or exposed to temperatures higher than 150° Celsius.
- After connecting the hydraulic hoses, always make a check of the direction of function and therefore, the engine or direction of motion of the cylinder are still correct.

2.16.3 Electrical system

- When working on the electrical system, always disconnect the battery (negative terminal).
- Only use the prescribed fuses. If fuses are used that are too highly rated, the electrical system will be destroyed – risk of fire.
- Risk of explosion. Avoid sparking and naked flames in the area of the battery.
- Ensure that the battery is connected correctly - firstly connect the positive terminal and then connect the negative terminal. When disconnecting the battery, disconnect the negative terminal first, followed by the positive terminal.
- Always place the appropriate cover over the positive battery terminal. If there is accidental earth contact, there is a risk of explosion
- The machine may be equipped with electronic components whose function is influenced by electromagnetic interference from other units. Such interference can pose risks to people, if the following safety information is not followed.
  - If retrofitting electrical units and/or components on the machine with a connection to the on-board power supply, the user is responsible for checking whether the installation might cause faults on the vehicle electronics or other components.
  - Ensure that the retrofitted electrical and electronic components comply with the EMC directive 2014/30/EU in the appropriate version and bear the CE mark.
- The cable clips must be checked for tight fit on a regular basis. Corrosion to cable connections will lead to the loss of tension. Clean and grease with acid-free Vaseline.
- The battery acid is highly corrosive and any contact to skin should therefore be avoided. If however, acid should get into your eyes, immediately rinse under running water for 10 to 15 minutes and seek medical advice immediately.
- Replace damaged cables immediately.
- Old batteries must be disposed of according to regulations.
- Store the batteries in a dry area during the winter periods (corrosion).

2.16.4 Brake system

- Only specialist workshops or recognised brake services can carry out adjustment and repair work on the brake system.
- Have the brake system thoroughly checked regularly.
- If there are any malfunctions, stop the tractor immediately using the brake system. Have the malfunction rectified immediately.
- Before working on the brake system, park the machine safely and secure the machine against unintentionally rolling away (wheel chocks)!
- Be particularly careful when carrying out any welding, torch cutting or drilling work in the area of the brake lines.
- Always carry out a braking test after any adjusting or repair work on the braking system.

Pneumatic braking system

- You are only allowed to start to move the vehicle after the hand brake symbol no longer appears in red in AMADRIVE

2.16.5 Tyres

- Repair work on tyres and wheels may only be carried out by specialists with suitable installation tools.
- Check the air pressure at regular intervals.
- Inflate tyres to the specified air pressure! If the air pressure in the tyres is too high, then there is a risk of explosions.
- Park the machine in a safe place and secure the machine against unintentionally rolling away (parking brake, wheel chocks), before carrying out work on the tyres!
- Tighten or retighten all the fixing screws and nuts in accordance with the specifications of AMAZONEN-WERKE.

2.16.6 Field sprayer operation

- o warning information on exposure to crop protection agents
  - Observe the recommendations of the crop protection agent manufacturer in respect of
  - o protective clothing
  - o regulations on dosing, applications and cleaning
- Pay attention to crop protection legislation regulations!
- Never open lines which are under pressure.
- The nominal volume of the spray liquid tank must not be exceeded during filling.
- Reduce your speed when turning.

  The steering wheel must be turned slowly at the start and end of the curve otherwise the boom will be exposed to high loads.
- Switch off the sprayer on headlands.
- Always carry sufficient water with you so that you are able to rinse away the crop protectant in the event of an emergency. If necessary, seek medical advice if your body makes contact with crop protectant! Risk of infection.

- When handling crop protection agents, wear the proper protective clothing, such as gloves, overalls, safety glasses, etc!
- Observe the information on the compatibility of crop protection agents and substances for the field sprayer.
- Do not spray any crop protection agents which have a tendency to stick together or set.
- Do not fill field sprayers with water from bodies of water which are open to the public, for the protection of people, animals and the environment.
- Only fill field sprayers
  - o using a free flow from the mains water supply.
  - o using genuine AMAZONE filling equipment.

2.16.7 Cleaning, maintenance and repair

- Due to toxic vapours in the spray liquid tank, climbing into the spray liquid tank is always forbidden.
- Repair work in the spray liquid tank must only be carried out by a specialist workshop!
- As a general rule, only carry out maintenance or repair work or cleaning when
  - the drive is switched off
  - the ignition key has been removed
- The machine must be positioned in a stable position during repairs. Always use wheel chocks on slopes.
- Secure the raised machine and/or raised machine parts against unintentional lowering before performing any cleaning, maintenance or repair work on the machine.
- Regularly check the nuts and bolts for firm seating and retighten them as necessary.
- When replacing work tools with blades, use suitable tools and gloves.
- Dispose of oils, greases and filters in the appropriate way.
- When changing the oil or dismantling the hydraulic parts, take measures to prevent the risk of burns that can result from hot oil.
- The cooling system of the engine should be cleaned on a regular basis; oil and plant residues are highly inflammable.
- Always wear protective clothing when welding!
- Attention: If the machine had previously been used to spray liquid fertiliser (ammonium nitrate), there is a risk of explosion when carrying out welding work! Clean the respective work area before starting work.
- Spare parts must meet at least the specified technical requirements of AMAZONEN-WERKE.
  This is ensured through the use of genuine AMAZONE spare parts.
- Anti-freeze: The fluid must be drained from all lines, pumps and containers.
- Repair work in the spray liquid tank may only be carried out after thorough cleaning and using breathing apparatus. For safety reasons a second person must monitor the work from outside the spray liquid tank!
- When repairing field sprayers which have been used for liquid fertiliser application with ammonium nitrate / urea solution, observe the following points:

  Residues of ammonium nitrate / urea solutions may form salts by the evaporation of the water on or in the spray liquid tank. This produces pure ammonium nitrate and urea. In its undiluted form, ammonium nitrate is explosive when combined with organic substances, e.g. urea, and subjected to critical temperatures during repair work (e.g. welding, grinding, filing).

  This danger can be eliminated by thoroughly washing out the spray liquid tank or the parts intended for repair with water, because the salt of the ammonium nitrate / urea solution is water-soluble. For this reason, clean the field sprayer thoroughly with water before carrying out repair work.

3 Loading

DANGER

Risk of accidents due to incorrect lading situation on the transport vehicle.

- Lower the implement for transport via the Configuration menu on the AmaDrive. Raise the implement again after transport.
- To secure the implement on a transport vehicle, the 3 marked lashing points must be used.

- 1 Front lashing point (1)

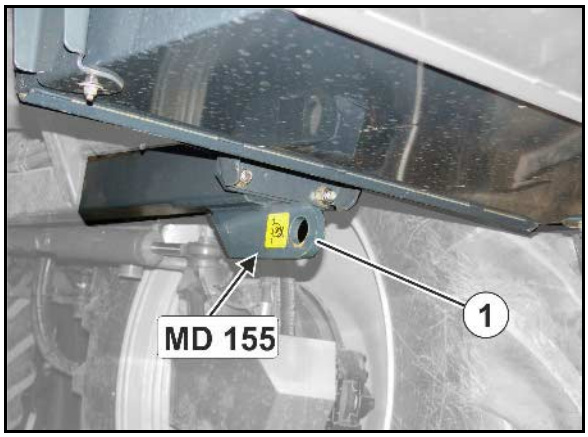

- 2 Rear lashing points (1)

When loading, lower the machine using the hydro-pneumatic spring suspension. Reactivate the hydro-pneumatic spring suspension again before use, see page 67.

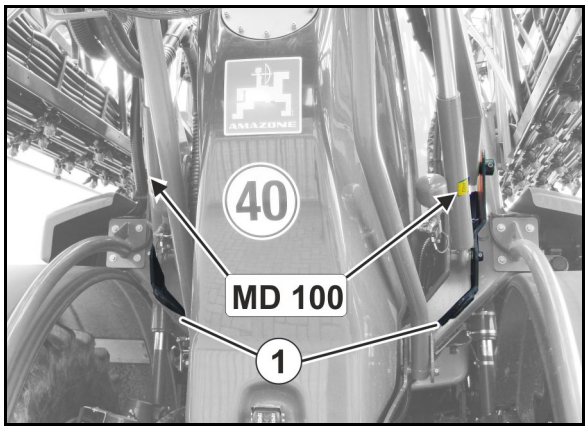

4 Product description

This section:

- provides a comprehensive overview of the machine structure.
- provides the names of the individual modules and controls.

If possible, read this section when actually at the machine. This helps you to understand the machine better.

The machine comprises the main assemblies:

- Tandem chassis with hydro-pneumatic suspension and central track width adjustment.
- Hydraulic front-wheel steering system, all-wheel steering system and crab steering system
- Front-wheel steering system for road transport
- Continuously variable hydrostatic individual wheel drive with disc brakes and pneumatic brake system (travel speed 40 km/h)
- 6 cylinder DEUTZ turbo diesel engine
- Full-comfort CLAAS cab, heater, full-comfort seat with air suspension, adjustable steering column, CD-Radio, air conditioner, clock
- 3 pumps (spraying pump, agitator pump and flushing water pump)
- Control terminal for spraying functions
- Super-L boom with field spray line, oscillation compensation, hydraulic slope compensation and Profi folding I (one-sided folding) or Profi folding II (angle-in / angle-out)
- Spray liquid tank with agitator, filling level indicator, flushing water tank
- Induction device, tank cleaning nozzles
- Electrical remote control of the field sprayer, job memory and GPS applications with control terminal and multi-function stick
- Vehicle operation with AMADRIVE control terminal.

4.1 Overview of the assemblies

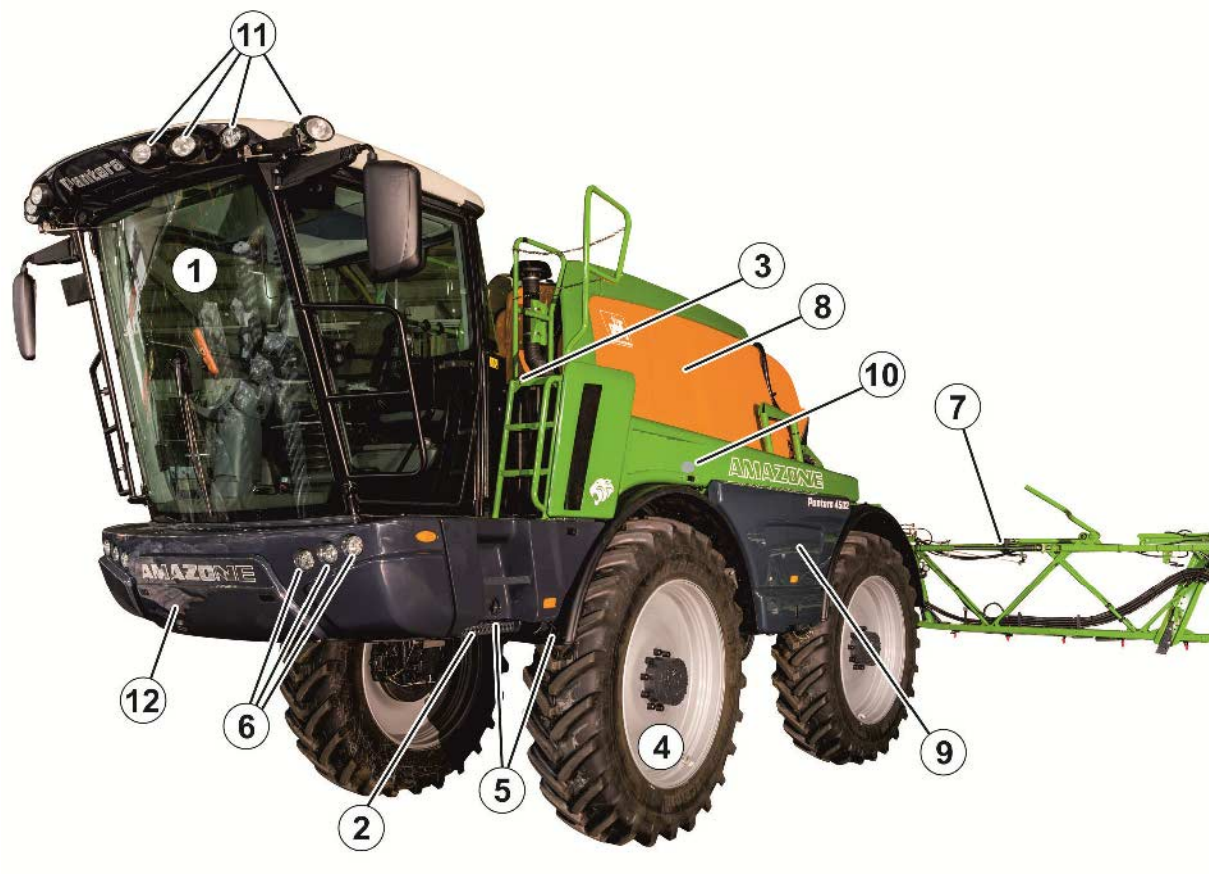

(1) Driver's cabin

(2) Slewable ladder

(3) Operation platform with maintenance flap

(4) Wheels with hydrostatic drive

(5) Hand wash tank and soap dispenser and drain

(6) Front lighting

(7) Sprayer boom

(8) Spray agent tank

(9) Folding cover for control terminal, swivelling container and work lights

(10) Foldable cover – Spraying technology (left and right)

(11) Work floodlights

(12) Folding cover for the front storage compartment

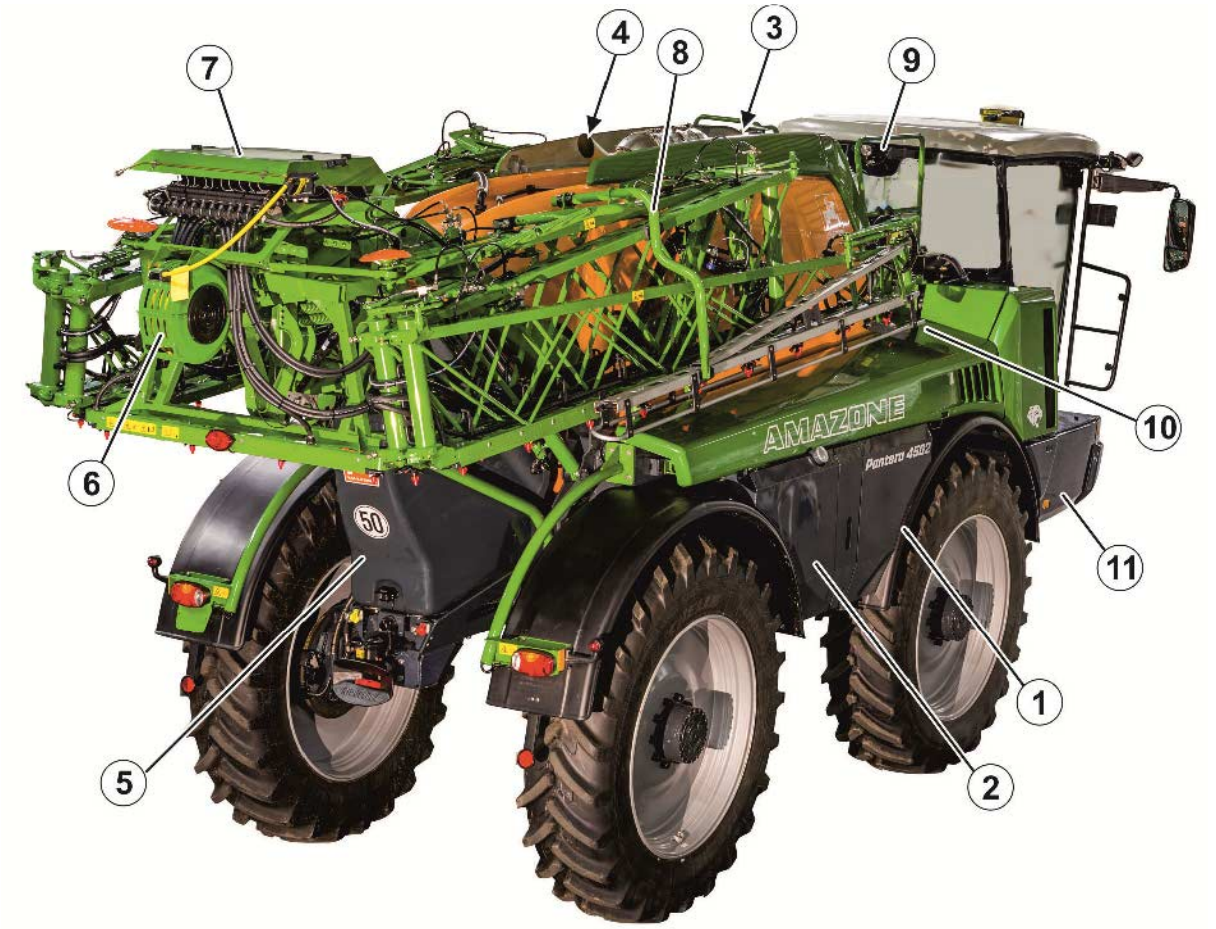

(1) Hydraulic oil tank
(2) Diesel tank and DEF tank
(3) Filling dome of the spray liquid tank
(4) Exhaust gas system with particle filter
(5) Flushing water tank
(6) Exterior cleaning
(7) Boom equipment
(8) Boom locking mechanism
(9) Maintenance floodlights
(10) Folding cover for the battery and main switch (only for Euro 3 Emission Standard)

4.2 Operating instructions and third party documentation

This operating manual of the machine and documentation of third parties are located in the service case.

Please observe the enclosed third-party documentation!

4.3 Safety and protection equipment

(1) Transport locking mechanism to prevent the Super-L boom from folding out unintentionally

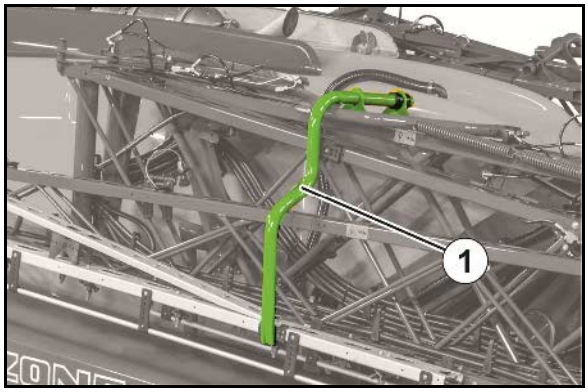

(1) Railing to protect against falling

(2) Fire extinguisher behind the cover

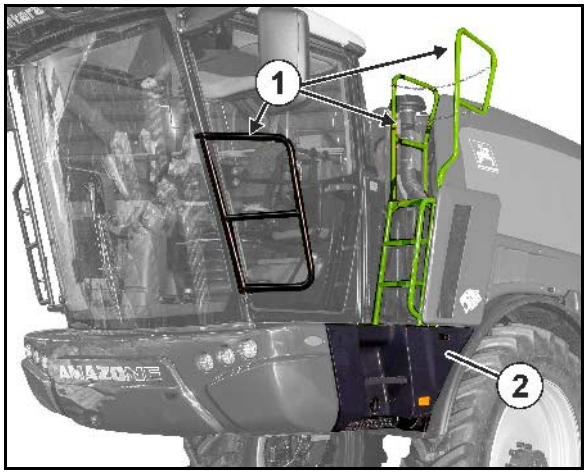

(3) Emergency exit on the right side of the cabin

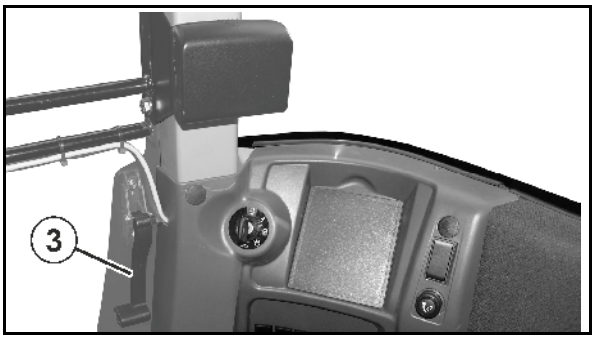

4.4 Transportation equipment

(1) Warning signs (square)
(2) Indicators / parking light
(3) Dipped beam
(4) High beam
(5) Rear-view mirror

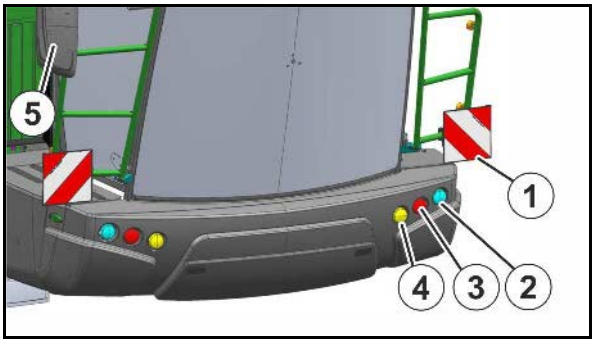

(1) Warning signs (square)
(2) Reflector, white (round)
(3) Rear lights, brake lights
(4) Reflector, red (round)
(5) Reflector, yellow
(6) Marker lights
(7) Turn indicators

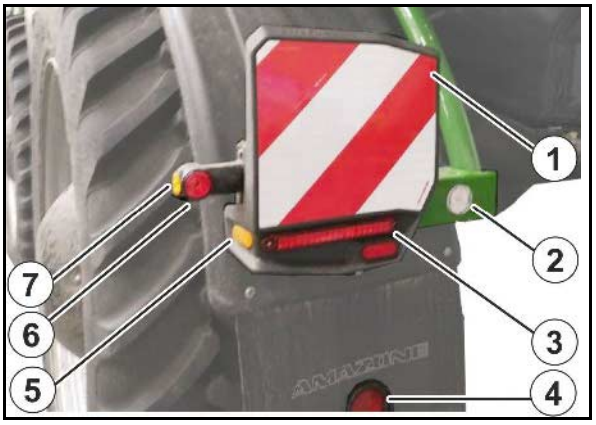

(1) Number plate holder with lighting
(2) Warning beacon

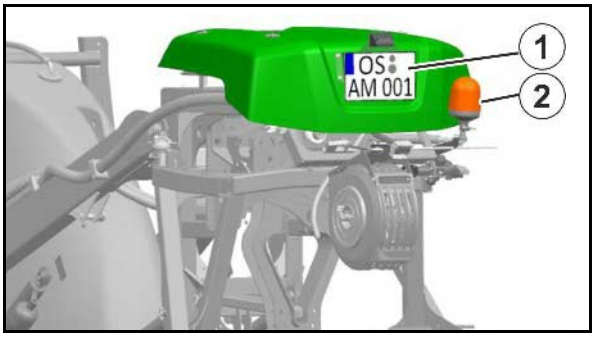

(1) 2 x 3 reflectors, yellow
(lateral view: distance of max. 3m)

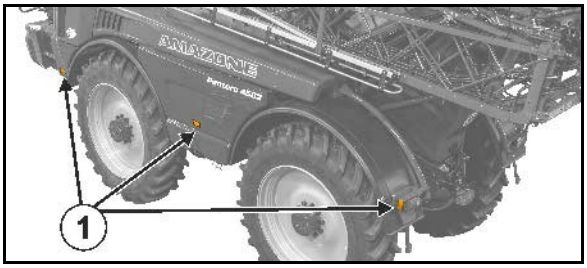

4.5 Intended use

The self-propelled Pantera field sprayer

- is intended for use in field crops and is used for transporting and spreading of crop protectant (insecticides, fungicides, herbicides, amongst others) in the form of suspensions, emulsions and mixtures as well as liquid fertiliser.
- is operated by one person in the cabin.
- a combination with other machines, devices and superstructures is not intended by the manufacturer.

Restrictions for use on slopes

(1) Driving on slopes with a full spray liquid tank

(2) Driving on slopes with max. half-filled spray liquid tank

(3) Application of residual quantities

(4) Turning

(5) Folding the sprayer boom

	(1)	(2)	(3)	(4)	(5)
Along the contours	15%	15%	15%	15%	20%
Up/down the slope	15%	20%	15%	15%	20%

"Intended use" also covers:

- Compliance with all the instructions in this operating manual.
- Execution of inspection and maintenance work.
- Exclusive use of genuine AMAZONE spare parts.

Other uses to those specified above are forbidden and shall be considered as improper.

For any damage resulting from improper use:

- the operator bears the sole responsibility,
- AMAZONEN-WERKE accepts no liability.

4.6 Regular device inspections

The implement underlies the European Union universally applicable regular device inspections (Crop Protection Directive 2009/128/EC and EN ISO 16122).

Have the device inspected at regular intervals by a recognised and certified inspection workshop.

The date for performing the next device inspection is written on the inspection plate on the implement.

German inspection plate

4.7 Consequences of using certain crop protection agents

We would like to draw attention to the fact that extended exposure (20 hours) to crop protection agents with which we are familiar, e.g. Lasso, Betanal and Tramat, Stomp, Iloxan, Mudecan, Elancolan and Teridox, can cause damage to the pump diaphragms, hoses, spray lines and tanks. The examples given are in no way intended to represent a comprehensive list.

In particular, we warn against unauthorised mixtures of two or more different crop protection agents.

Substances which have a tendency to stick together or set must not be applied.

When using such aggressive crop protection agents, it is recommended that the spray liquid be applied immediately after preparation and then that the sprayer be thoroughly cleaned afterwards with water.

Viton membranes are available as replacements for pumps. These are resistant to solvent-containing crop protection agents. However their service life is reduced by use at low temperatures (e.g. AUS in frosty conditions).

The materials and components used for AMAZONE field sprayers are safe for liquid fertiliser.

4.8 Danger areas and danger points

The danger area is the area around the machine in which people can be caught:

- work movements made by the machine and its tools
- materials or foreign bodies thrown out of the machine
- tools rising or falling unintentionally
- unintentional rolling of the tractor and the machine

Within the machine danger area, there are danger points with permanent or unexpected risks. Warning pictograms indicate these danger points and warn against residual dangers, which cannot be eliminated for construction reasons. Here, the special safety regulations of the appropriate section shall be valid.

No-one may stand in the machine danger area:

- if the tractor engine is running with the PTO shaft / hydraulic system connected.
- if the tractor and machine are not protected against unintentional start-up and rolling.

The operating person may only move the machine or switch or drive the tools from the transport position to the working position or vice-versa when there is no-one in the machine danger area.

Danger points exist:

- where there are moving components.
- on the moving machine.
- in the swivel range of the sprayer boom.
- in the spray liquid tank due to poisonous vapours.
- under raised, unsecured machines or machine parts.
- when unfolding/folding the sprayer boom in the vicinity of overhead electricity cables, through contact with the cables.
- near the hot exhaust system on the tractor, in particular with active regeneration of the diesel particle filter

4.9 Rating plate and CE mark

Machine rating plate

The following information is specified on the rating plate and the CE mark:

(1) Implement number

(2) Vehicle identification number

(3) Product

(4) Permissible technical implement weight

(5) Tare weight kg

(6) Model year

(7) Year of manufacture

Additional rating plate

The following information is specified on the additional rating plate:

(1) Note for type approval

(2) Note for type approval

(3) Vehicle identification number

(4) Permissible technical total weight

(5) Permissible technical trailer load for a drawbar trailer vehicle with pneumatic brake

(A0) Permissible technical drawbar load A-0

(A1) Permissible technical axle load for axle 1

(A2) Permissible technical axle load for axle 2

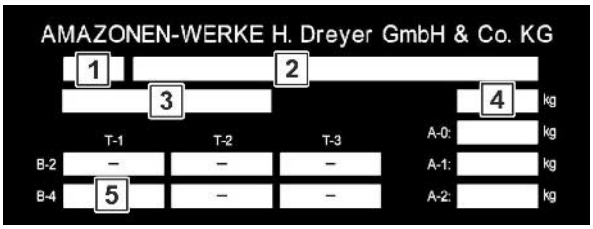

4.10 Conformity

	Directives/Standards designation	
The implement complies with the	• Implement directive	2006/42/EC
	• EMC directive	2014/30/EU

4.11 Technically possible maximum application rate

The application rate of the implement is limited by the following factors:

- Maximum flow to the sprayer boom of 200 l/min (HighFlow 400 l/min).
- Maximum flow per part-width section of 25 l/min (with 2 spray lines: 40 l/min per part-width section).
- Maximum flow per nozzle body of 4 l/min.

4.12 Maximum permissible application rate for crop protection products

The permissible application rate of the implement is limited by the minimum required agitator capacity.

The agitator capacity per minute should be 5% of the hopper volume.

This is particularly applicable for active substances that are hard to keep in suspension.

With active substances that are dissolved, the agitator capacity can be reduced.

Determining the permissible application rate depending on the agitator capacity

Calculation formula for the application rate in l/min:

(The agitator capacity per minute must be 5% of the hopper volume)

Permissible application rate	=	Pump capacity	-	0.05 x nominal tank volume
Permissible application rate	=	490 l/min	-	0,05 x 4500 l
Permissible application rate	=	**265 l/min**		

Conversion of the application rate in l/ha:

1. Determine the application rate per nozzle (divide the permissible application rate by the number of nozzles).
2. Read the application rate per hectare depending on the speed from the spray table (See page 288).

Example: Super L 36 m, 72 nozzles, 10 km/h

Permissible application rate	=	Application rate per nozzle	:	Number of nozzles
Permissible application rate	=	265 l/min	:	72
Permissible application rate	=	**3,7 l/min**		

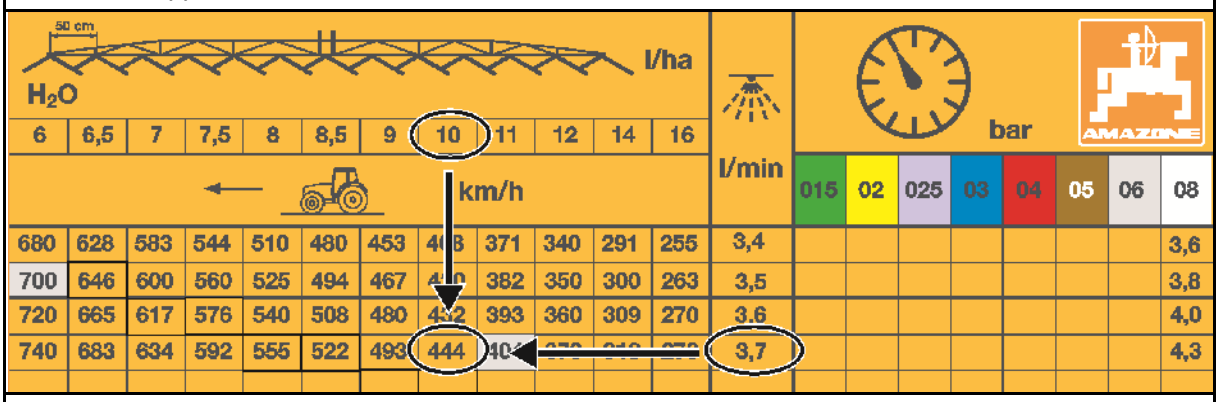

→ **Permissible application rate per hectare = 444 l/ha**

4.13 Technical data

4.13.1 Dimensions

Total length	8600 mm	
Overall height	3800 - 3900 mm	
Overall width of the basic machine	2550 mm	(Standard)
	3000 mm	(depending on the running gear and tyres)
Ground clearance	1050 – 1700 mm	(depending on the running gear and tyres)
Working width	24 - 40 m	

4.13.2 Payload

Maximum payload	**=**	**Permissible technical implement weight**	**-**	**Tare weight**

DANGER

Exceeding the maximum permissible payload is prohibited.

Risk of accident due to unstable driving conditions!
Carefully determine the payload, and therefore the permitted filling amount for your machine. Not all filling media can be used to fill the tank completely.

The permissible technical implement weight and the tare weight are specified on the implement rating plate.

Permissible loads, track widths and tyre data (Pantera Standard)

Wheel size	300/95 R52	320/90 R54	340/85 R48	380/90 R46	380/90 R46	380/90 R50	380/90 R50	480/80 R42	480/80 R46	480/80 R46	520/85 R38	520/85 R42	520/85 R42	620/70 R38	650/65 R38	710/60 R38
Order no.	LE439 +50	LE470 +75	LE459 +50	LE391 +50	LE471 +50	LE410 +50	LE494 +50	LE412 +50	LE267 +50	LE495 +50	LE413 +25	LE437 +25	LE189 +25	LE393 -25	LE368 -25	LE394 -50
Manufacturer	Alliance	BKT AGRI-MAX	Alliance	Michelin	Alliance AGRIFL EX	Alliance	Michelin	Michelin	Michelin	Michelin	Alliance	Alliance	Michelin	Michelin	Trelle-borg	Michelin
Type	350	RT 945	350	SPRAY-BIB	363	AS 350	SPRAY-BIB	AgriBib	AgriBib	SPRAY-BIB	385	FarmPro	Me-gaXBib	Me-gaXBib	Tm800	XeoBib
Offset [mm]	+50	+75	+50	+50	+50	+50	+50	+50	+50	+50	+25	+25	+25	-25	-25	-50
Cross-sectional width [mm]	310	319	345	383	389	380	385	494	499	480	540	516	537	608	645	712
External diameter [mm]	1890	1948	1805	1842	1842	1954	1947	1858	1948	1950	1838	1951	1937	1864	1811	1814
Load index (40 km/h)	159 A8	155A8	159 A8	173 D	161 D	158 A8	175 D	156 A8	158 A8	177 D	155 A8	157 A8	162 A8	170 A8	157D	160 D
Load-bearing capacity at 40 km/h [kg]	4380	3875	4380	6500	5600	4625	6900	4000	4250	7300	3875	4125	4750	6000	4125	4500
Load index (50 km/h)	157 B	155B	156 D	173 D	168 D	158 B	175 D	156 B	158 B	177 D	155 B	157 B	162 B	170 B	157 D	160 D
Load-bearing capacity at 50 km/h [kg]	4200	3875	4200	6500	5600	4250	6900	4000	4250	7300	3875	4125	4750	6000	4125	4500
Max. air pressure [bar]	4,8	3,6	4,8	4,4	4,4	4,3	4,4	2,4	2,4	3,6	1,6	1,6	2,4	3,2	1,6	1
Min. air pressure [bar] at 50	4,8	3,6	4,4	2,2	2,5	3	2,2	2,4	2,2	1,8	1,6	1,6	1,6	1,6	1,4	1
Act. load-bearing capacity at recom. air pressure [kg]	4200	3875	3990	4375	4040	4000	4625	4000	4075	5300	3875	4125	4125	4075	3980	4500
Perm. tot. wheel load capacity	17520	15500	17520	26000	22400	18500	27600	16000	17000	29200	15500	16500	19000	24000	16500	18000
Perm. tot. wheel load capacity	16800	15500	16800	26000	22400	17000	27600	16000	17000	29200	15500	16500	19000	24000	16500	18000
Track width [mm] (from – to)	1800 - 2400	1750 - 2350	1800 - 2400	1800 - 2400	1800 - 2400	1800 - 2400	1800 - 2400	1800 - 2350	1800 - 2400	1800 - 2400	1800 - 2400	1800 - 2400	1800 - 2400	1900 - 2500	1900 - 2500	2000 - 2600
Ground clearance [mm]	1190	1225	1150	1150	1150	1190	1210	1140	1190	1200	1130	1180	1180	1150	1100	1090

Permissible loads, track widths and tyre data (Pantera H)

Wheel size	300/95 R52	320/90 R54	380/90 R46	380/90 R46	380/90 R50	380/90 R50	480/80 R46	480/80 R46	520/85 R42	520/85 R42
Order no.	LE439 +50	LE470 +75	LE391 +50	LE471 +50	LE410 +50	LE494 +50	LE267 +-0	LE495 +-0	LE437 -25	LE189 -25
Manufacturer	Alliance	BKT	Michelin	Alliance	Alliance	Michelin	Michelin	Michelin	Alliance	Michelin
Type	350	AGRI-MAX RT 945	SPRAY BIB	AGRI-FLEX 363	AS 350	SPRAY BIB	AgriBib	SPRAY BIB	Farm Pro	MegaX Bib
Offset [mm]	+50	+75	+50	+50	+50	+50	+0	+0	-25	-25
Cross-sectional width [mm]	310	319	383	389	380	385	499	480	516	537
External diameter [mm]	1890	1948	1842	1842	1954	1947	1948	1950	1951	1937
Load index (40 km/h)	159 A8	155 A8	173 D	168 D	161 A8	175 D	158 A8	177 D	157 A8	162 A8
Load-bearing capacity at 40 km/h [kg]	4380	3875	6500	5600	4250	6900	4250	7300	4125	4750
Load index (50 km/h)	157 B	155 B	173 D	168 D	158 B	175 D	158 B	177 D	157 B	162 B
Load-bearing capacity at 50 km/h [kg]	4200	3875	4375	4200	4240	4625	4250	5300	4125	4750
Max. air pressure [bar]	4,8	3,6	4,4	4,4	4,3	4,4	2,4	3,6	1,6	2,4
Min. air pressure [bar] at 50 km/h	4,8	3,6	2,2	2,7	3,3	2,2	2,4	1,8	1,6	1,6
Act. load-bearing capacity at recom. air pressure [kg]	4200	3875	4375	4200	4240	4625	4250	5300	4125	4125
Perm. tot. wheel load capacity (40 km/h) [kg]	17520	15500	26000	22400	18500	27600	17000	29200	16500	19000
Perm. tot. wheel load capacity (50 km/h) [kg]	16800	15500	26000	22400	17000	27600	17000	29200	16500	19000
Track width [mm] (Running gear down)	1800-2400	1750-2350	1800-2400	1800-2400	1800-2400	1800-2400	1900-2400	1900-2400	1950-2500	1950-2500
Track width [mm] (Running gear up)	2100 - 2600	2100 - 2550	2100 - 2600	2100 - 2600	2100 - 2600	2100 - 2600	2100 - 2600	2100 - 2600	2200 - 2700	2200-2700
Ground clearance [mm] (running gear down)	1180	1250	1180	1180	1250	1250	1230	1230	1220	1220
Ground clearance [mm] (running gear up)	1630	1700	1630	1630	1700	1700	1680	1680	1670	1670

Permissible loads, track widths and tyre data (Pantera W)

Wheel size	300/95 R52	340/85 R48	380/90 R46	380/90 R46	380/90 R50	380/90 R50	480/80 R42	480/80 R46	480/80 R46	520/85 R38	520/85 R42	520/85 R42
Order no.	LE439 +50	LE459 +50	LE391 +50	LE471 +50	LE410 +50	LE494 +50	LE412 +50	LE267 +50	LE495 +50	LE413 +50	LE437 +50	LE189 +50
Manufacturer	Alliance	Alliance	Michelin	Alliance	Alliance	Michelin	Michelin	Michelin	Michelin	Alliance	Alliance	Michelin
Type	350	350	SPRAYBIB	AGRIFLEX 363	AS 350	SPRAYBIB	AgriBib	AgriBib	SPRAYBIB	385	Farm Pro	MegaXBib
Offset [mm]	+50	+50	+50	+50	+50	+50	+50	+50	+50	+50	+50	+50
Cross-sectional width [mm]	310	345	383	389	380	385	494	499	480	540	516	537
External diameter [mm]	1890	1805	1842	1842	1954	1947	1858	1948	1950	1838	1951	1937
Load index (40 km/h)	159 A8	159 A8	173 D	168 D	158 A8	175 D	156 A8	158 A8	177 D	155 A8	157 A8	162 A8
Load-bearing capacity at 40 km/h [kg]	4380	4380	6500	5600	4650	6900	4000	4250	7300	3875	4125	4750
Load index (50 km/h)	157 B	156 D	173 D	168 D	158 B	175 D	156 B	158 B	177 D	155 B	157 B	162 B
Load-bearing capacity at 50 km/h [kg]	4200	4200	6500	5600	4250	6900	4000	4250	7300	3875	4125	4750
Max. air pressure [bar]	4,8	4,8	4,4	4,4	4,3	4,4	2,4	2,4	3,6	1,6	1,6	2,4
Min. air pressure [bar] at 50 km/h	4,8	4,4	2,2	2,5	3	2,2	2,4	2,2	1,8	1,6	1,6	1,6
Act. load-bearing capacity at recom. air pressure [kg]	4200	3990	4375	4040	4000	4625	4000	4075	5300	3875	4125	4125
Perm. tot. wheel load capacity (40 km/h) [kg]	17520	17520	26000	22400	18500	27600	16000	17000	29200	15500	16500	19000
Perm. tot. wheel load capacity (50 km/h) [kg]	16800	16800	26000	22400	17000	27600	16000	17000	29200	15500	16500	19000
Track width [mm] (from – to)	2250 - 3000	2250 - 3000	2250 - 3000	2250 - 3000	2250 - 3000	2250 - 3000	2250 - 3000	2250 - 3000	2250 - 3000	2250 - 3000	2250 - 3000	2250 - 3000
Track width [mm] (from – to)	1110	1070	1060	1070	1105	1130	1060	1120	1120	1050	1100	1100

4.13.3 Technical data spraying system

Typ	Pantera 4503
Spray liquid tank • Actual volume • Nominal volume	 4750 l 4500 l
Flushing water tank volume	500 l
Filling height • from the ground • of working platform	 ca. 3300 m (depending on the tyres) 900 m
Hand wash tank volume	18 l
Permissible system pressure	10 bar
Arbeitsgeschwindigkeit	Max. 20 km/h
Central switching mechanism	Electric, part width section valve coupling
Spray pressure adjustment	Electric
Spray pressure setting range	0,8 – 10 bar
Spray pressure display	digital spray pressure display
Suction filter	50 (80) mesh
Main agitator	Fill level dependent control
Additional agitator	Infinitely adjustable
Spray rate control	Ground speed related, via job computer
Nozzle height	500 – 2500 mm

Pump equipment		**Spraying pump / agitator pump** 2 x Altek P260	**Flushing water pump** 1 x P150
Delivery capacity at nominal speed	bei 0 bar	2 x 260 l/min	150 l/min
	bei 10 bar	2 x 245 l/min	120 l/min
Power requirement		12,6 kW	4,0 kW
Construction type		12- cylinder piston diaphragm pump	
Pulsation damping		Pressure reservoir	

Part-width sections depending on the working width

Working width	Number	Number of nozzles per part width sections	
		With DUS	**Without** DUS
21 m	5	8-9-8-9-8	8-9-8-9-8
	7	6-6-7-4-7-6-6	6-6-7-4-7-6-6
	9	6-4-5-4-4-4-5-4-6	6-5-5-5-5-5-5-5-6
	11	-	3-3-4-5-4-4-4-5-4-3-3
22 m	5	-	9-10-10-10-9
24 m	5	9-10-10-10-9	-
	7	6-6-8-8-8-6-6	6-6-8-8-8-6-6
	9	6-5-5-5-6-5-5-5-6	6-5-5-5-6-5-5-5-6
	11	-	5-4-5-4-4-4-4-4-5-4-5
	13	-	3-4-4-3-4-4-4-4-4-3-4-4-3
27 m	7	8-7-8-8-8-7-8	8-7-8-8-8-7-8
	9	6-6-6-6-6-6-6-6-6	6-6-6-6-6-6-6-6-6
	11	-	6-6-5-4-4-4-4-4-5-6-6
	13	-	3-3-3-3-6-6-6-6-6-3-3-3-3
28 m	7	9-7-8-8-8-7-9	9-7-8-8-8-7-9
	9	7-6-6-6-6-6-6-6-7	7-6-6-6-6-6-6-6-7
	11	-	4-4-5-5-7-6-7-5-5-4-4
	13	-	4-4-5-4-4-5-4-5-4-4-5-4-4
30 m	9	8-7-6-6-6-6-6-7-8	8-7-6-6-6-6-6-7-8
	11	-	5-5-5-6-6-6-6-6-5-5-5
	13	-	3-3-4-5-5-7-6-7-5-5-4-3-3
32 m	9	8-6-7-7-8-7-7-6-8	8-6-7-7-8-7-7-6-8
	11	-	5-6-6-6-6-6-6-6-6-6-5
	13	-	5-5-5-5-5-5-4-5-5-5-5-5-5
33 m	9	7-8-7-7-8-7-7-8-7	7-8-7-7-8-7-7-8-7
	11	6-6-6-6-6-6-6-6-6-6-6	6-6-6-6-6-6-6-6-6-6-6
	13	5-5-5-5-5-5-6-5-5-5-5-5-5	6-6-4-5-4-5-6-5-4-5-4-6-6
36 m	7	10-10-10-12-10-10-10	10-10-10-12-10-10-10
	9	9-9-7-7-8-7-7-9-9	9-9-7-7-8-7-7-9-9
	11	-	8-7-6-6-6-6-6-6-6-7-8
	13	-	6-6-6-5-5-5-5-5-5-6-6-6-6
36 m / 24 m	9	6-7-(9+1)-9-10-9-(9+1)-7-6	6-7-(9+1)-9-10-9-(9+1)-7-6
	11	6-7-(5+1)-6-8-8-8-6-(5+1)-7-6	6-7-(5+1)-6-8-8-8-6-(5+1)-7-6
	13	6-7-6-5-5-5-6-5-5-5-6-7-6	6-7-(5+1)-6-5-5-4-5-5-6-(5+1)-7-6
39 m	9	7-9-9-9-10-9-9-9-7	7-9-9-9-10-9-9-9-7
	11	-	7-6-7-7-8-8-8-7-7-6-7
	13	6-6-6-6-6-6-6-6-6-6-6-6-6	6-6-6-6-6-6-6-6-6-6-6-6-6
40 m	9	8-9-9-9-10-9-9-9-8	8-9-9-9-10-9-9-9-8
	11	-	7-67-7-8-8-8-7-7-6-7
	13	-	7-6-6-6-6-6-6-6-6-6-6-6-7

4.13.4 Residual amounts

Technical residue incl. pump

On the flat		24 l
Along the contours		
	Direction of travel 15 % to left	27 l
	Direction of travel 15 % to right	21 l
Along the gradient		
	15% up the slope	32 l
	15% down the slope	32 l

Technical boom residues

Working width	Number of part-width sections	Part-width section control						single nozzle control		
		Without DUS			With DUS			Without DUS		
		A	B	C	A	B	C	A	B	C
21 m	5	4,5 l	9,0 l	13,5 l	14,5 l	1,0 l	15,5 l	18,1 l	1,5 l	19,6 l
	7	5,0 l	10,5 l	15,5 l	17,0 l	1,0 l	18,0 l			
	9	5,5 l	16,0 l	21,5 l	23,0 l	1,5 l	24,5 l			
	11	5,5 l	22,0 l	27,5 l	28,5 l	1,5 l	30 l			
24 m	5	5,0 l	10,0 l	15,0 l	16,0 l	1,5 l	17,5 l	19,0 l	2,0 l	21,0 l
	7	5,0 l	11,5 l	16,5 l	17,5 l	1,5 l	19,0 l			
	9	5,5 l	17,0 l	22,5 l	23,5 l	2,0 l	25,5 l			
	11	5,5 l	22,5 l	28,0 l	29,0 l	2,0 l	31,0 l			
	13	6,0 l	25,0 l	31,0 l	33,0 l	2,0 l	35,0 l			
27 m	7	5,0 l	12,5 l	17,5 l	18,5 l	2,0 l	20,5 l	22,4 l	2,0 l	24,4 l
	9	5,5 l	17,5 l	23,0 l	24,0 l	2,0 l	26,0 l			
	11	5,5 l	23,0 l	28,5 l	29,0 l	2,0 l	31,0 l			
	13	6,0 l	25,5 l	31,5 l	33,5 l	2,0 l	35,5 l			
28 m	7	5,0 l	13,0 l	18,0 l	19,0 l	2,0 l	21,0 l	22,8 l	2,0 l	24,8 l
	9	5,5 l	17,5 l	23,0 l	24,0 l	2,0 l	26,0 l			
	11	5,5 l	23,0 l	28,5 l	29,0 l	2,0 l	31,0 l			
	13	6,0 l	25,5 l	31,5 l	33,5 l	2,5 l	36 l			
30 m	9	5,5 l	18,0 l	23,5 l	24,0 l	2,5 l	26,5 l	24,6 l	2,5 l	27,1 l
	11	5,5 l	23,0 l	28,5 l	29,0 l	2,5 l	31,5 l			
	13	6,0 l	26,0 l	32,0 l	34,0 l	2,5 l	36,5 l			
32 m	9	5,5 l	18,5 l	24,0 l	24,0 l	2,5 l	27,0 l	27,9 l	2,5 l	30,4 l
	11	6,0 l	22,5 l	28,5 l	28,5 l	2,5 l	31,0 l			
	13	6,0 l	26,5 l	32,5 l	34 l	2,5 l	36,5 l			
33 m	9	5,5 l	19,0 l	24,5 l	25,0 l	2,5 l	27,5 l	27,6 l	2,5 l	30,1 l
	11	6,0 l	23,0 l	29,0 l	29,5 l	2,5 l	32,0 l			
	13	6,0 l	27,0 l	33,0 l	34,0 l	3,0 l	37,0 l			

36 m	7	5,0 l	16,0 l	21,0 l	21,5 l	3,0 l	24,5 l	29,3 l	3,0 l	32,3 l
	9	5,5 l	19,5 l	25,0 l	25,5 l	3,0 l	28,5 l			
	11	6,0 l	23,0 l	29,0 l	29,5 l	3,0 l	32,5 l			
	13	6,5 l	27,0 l	33,5 l	34,0 l	3,0 l	37,0 l			
39 m	9	5,5 l	20,5 l	26,0 l	26,5 l	3,0 l	29,5 l	33,7 l	3,0 l	36,7 l
	11	6,0 l	24,0 l	30,0 l	30,5 l	3,0 l	33,5 l			
	13	6,5 l	28,0 l	34,5 l	35,0 l	3,0 l	38,0 l			
40 m	9	5,5 l	21,0 l	26,5 l	27,0 l	3,0 l	30,0 l	34,0 l	3,0 l	37,0 l
	11	6,0 l	24,0 l	30,0 l	30,5 l	3,0 l	33,5 l			
	13	6,5 l	28,0 l	34,5 l	35,0 l	3,0 l	38,0 l			

DUS: Pressure circulating system
A: Dilutable
B: Not dilutable
C: Total

4.13.5 Technical data, carrier vehicle

Frame:			
System		Oscillating axle with springs and shock absorbers	
Wheelbase		3100 mm	
Turning radius		4500 mm	
Steering	Front axle	Hydraulic via Orbitrol	
	Rear axle	Electric hydraulic	
Drive:		Hydraulic all-wheel drive	
Drive pump	Manufacturer, type Maximum operating pressure	LINDE, HPV 210 (210 ccm/revs), 420 bar	
Wheel motor	Manufacturer, type Maximum operating pressure	LINDE, HMV 75 (75 ccm/revs), 420 bar	
Wheel gears	Manufacturer, type	Bonfrigioli 6 06 W 2	
Auxiliary pump	Manufacturer, type Operating pressure (Spraying pump drive, cooler fan)	LINDE, HPR 75 (75 ccm/revs), 210 bar	
Auxiliary pump	Manufacturer, type Operating pressure (Cylinder / steering system)	LINDE, HPR 55 (55 ccm/revs), 200 bar	
Travel speed	o Field work	0 - 20 km/h	
	o Transport	25 / 40 / 50 km/h	
Diesel engine:			
Manufacturer		DEUTZ	
Engine type		TCD 6.1 L6 industrial motor Turbo diesel engine with direct injection and turbocharger with charge air cooling	
Emission standard	EU USA	Euro 4 EPA Tier 5	Euro 3A
Exhaust after-treatment	• Oxidation catalytic converter • Particle filter • SCR (DEF)	x x x	
Exhaust after-treatment		Oxidation catalytic converter / particle filter	
Maximum power		160 KW (218 PS)	
Electrical system		12 Volt	
Battery		12 Volt 180 Ah	
Fuel tank	Content	230 l	
DEF-Tank (Euro 5)	Content	20l	

4.13.6 Emission values according to noise and vibration health & safety regulations

The measurements were performed in compliance with the noise and vibration health & safety regulations 2002/44/EC.

Noise level:

The workplace-related emission value (noise level) is 75 dB(A), measured in operating condition at the ear of the tractor driver with the tractor cab closed.

Measuring device: OPTAC SLM 5.

Vibrations:

The job-related emission value (daily vibration exposure) is 0.44 m/s^2, measured during operation at the driver's seat

Measuring device: Pietzotronics 356B41

5 Structure and function, carrier vehicle

5.1 Drive

See separate operating manual for Deutz engine.

A Deutz diesel engine serves as the drive.

The diesel engine can be operated in two states:

Eco mode:

- Requirement-orientated adoption of the engine speed with regard to an optimum fuel consumption and maximum output.
- Reduced speed level.
- Moderate driving dynamics.
- Idling speed 800 min^{-1}.

Standard mode:

- Full driving dynamics.
- Maximum engine speed of 2000 min^{-1} possible.
- Manual adjustment of the engine speed in field mode.

5.1.1 Driving-in the engine

We recommend that you treat the engine with great care during the first 50 operational hours. This means that the engine has to warm-up first during this period before it is sped up to high load and not at full speed straight away.

Following work at maximum load, allow the engine to idle for a while until the temperature of the motor sinks to a normal value to prevent heat accumulation if the engine is stopped immediately.

The oil has to be changed after the first 50 to 150 operational hours (while the engine is still warm!), the oil filter and fuel filters also have to be replaced.

In the event of queries on maintenance, observe the details of the engine manufacturer.

5.1.2 Engine fuel system

The fuel tank is located on the right side of the machine.

(1) Fuel tank

(2) Swivelling ascent for filling the fuel tank, folded up in transport position

(3) Handle and access to lock the folded step

(4) Fill opening with lid

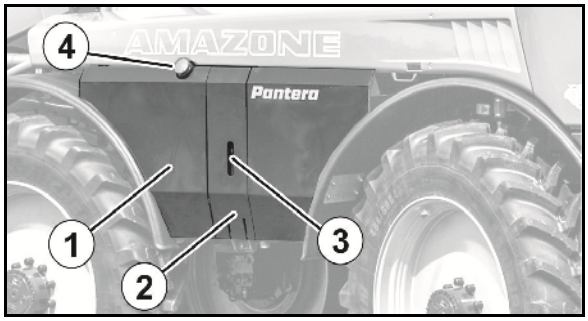

(5) Ascent folded down

(6) Folding step

(7) DEF tank

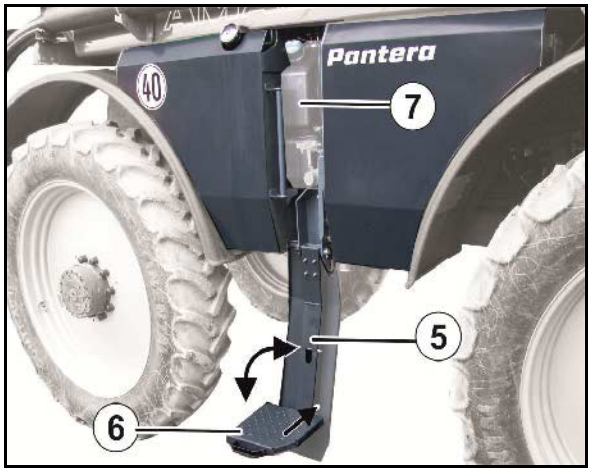

CAUTION

- **Turn off the engine when filling the fuel tank.**
- **Never smoke when filling the fuel tank!**
- **Take care that no oil / petrol penetrates into the ground → Environmental pollution!**

- Also make sure that no dirt is able to enter the fuel tank.
- Before you open the tank, you have to clean the cover and the opening thoroughly first.

→ Small contaminants may seriously damage the fuel system.

- Preferably, the tank should be filled in the evening immediately after working in order to avoid the accumulation of condensed water in the tank.

→ Water can cause damage to the fuel system and leads to the formation of rust.

Avoid driving until the fuel tank is empty.

→ Air and impurities in the residual petrol may enter the system and reduce the service life or block the fuel pump.

Fuel quality

The following fuel specifications are approved:

- Diesel fuels

  Sulphur ≤ 10 mg/kg

  - DIN 51628
  - EN 590

  Sulphur ≤15 mg/kg

  - ASTM D 975 Grade 1-D S15 –
  - ASTM D 975 Grade 2-D S15
- Light fuel oil (EN 590 quality)

  Sulphur ≤10 mg/kg

Take care that you fill the tank with the fuel for the respective season!

Additives are contained in winter fuel that prevent the formation of paraffin and ice crystals at low temperatures. Otherwise this may lead to blockages in the fuel system.

When using the machine in transitional periods, you should therefore fill the tank with fuels complying with DIN/EN 590.

5.1.3 Lufteinlasssystem des Motors

(1) Dry air filter

(2) Dust discharge valve

(3) Maintenance indicator

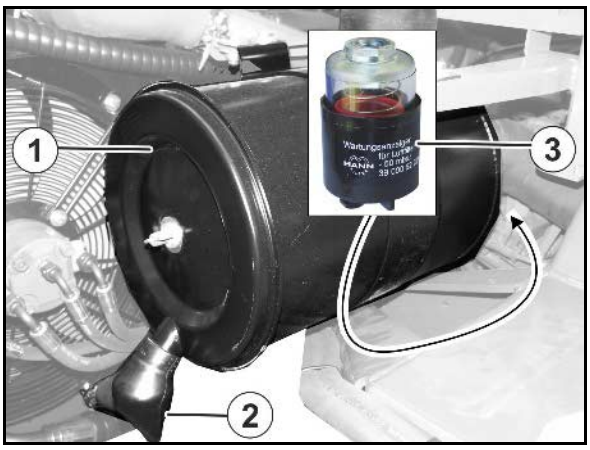

5.1.4 Cooling system oft the engineMotors

(1) Compensating reservoir for coulant

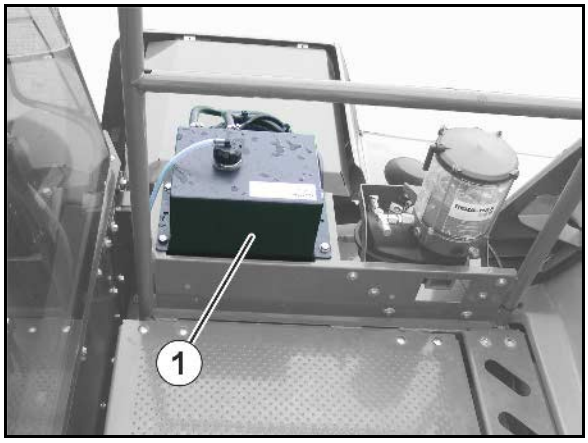

5.2 Exhaust gas treatment

Only for Euro 5 Emission Standard

The exhaust treatment consists of :

- Oxidation catalyser
- Particle filter with regeneration system
- Selective catalytic reduction (SCR) with DEF

5.2.1 Diesel particle filter

WARNING

Risk of burns from a hot particle filter.

During regeneration, the diesel particle filter on the machine can get up to 500° hot. While the machine is running, always keep people away from it.

The particle filter is continuously regenerated while the motor is running.

The particle filter must be replaced after 8000 operational hours when the message appears on the AMADRIVE.

An ash load of 100 % is then reached (see AMADRIVE operating data). Regeneration is no longer possible.

5.2.2 Reduction of the nitrogen oxides in the exhaust gas (SCR)

The reduction of the nitrogen oxides in the exhaust gas is called SCR (selective catalytic reduction).

In doing so, a DEF urea solution (diesel exhaust fluid) is injected into the exhaust gas system.

The DEF consumption represents approx. 2.5 % of the diesel consumption.

If a serious error occurs, the system reacts by reducing the power of the motor.

The DEF urea solution is sold e.g. under the brand names AdBlue, AUS 32 and Aria 32.

Protective gloves and protective goggles must be worn when handling DEF.

DEF crystallises at -11 °C, and above +35 °C, a hydrolysis reaction begins (degradation into ammonia and carbon dioxide).

The DEF tank must only be filled with DEF. Filling with other media can result in destruction of the system.

System monitoring

Emission-relevant errors include:

- DEF fill level
- Catalyser efficiency / DEF® quality
- Manipulation
- System error

An acoustic signal is issued if there is an error.

If a serious error occurs, or if an error is not rectified, the system reacts by reducing the power of the motor.

5.3 Running gear

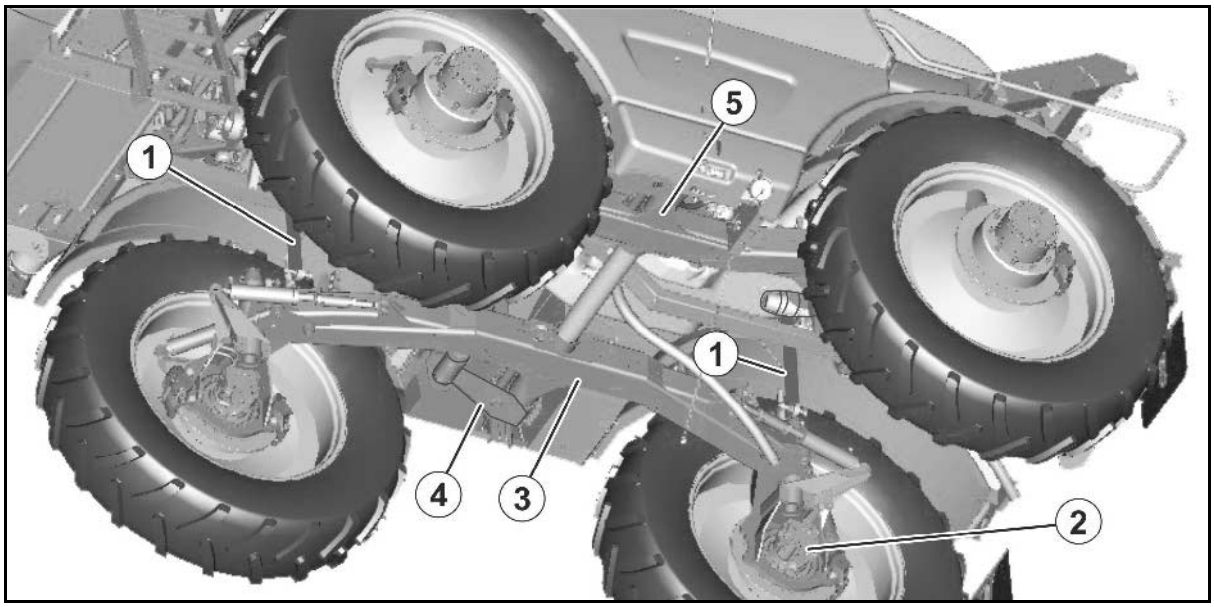

(1) Spring suspension

(2) Wheel motor with disc brake

(3) Tandem running gear

(4) Oscillating yoke

(5) Track width adjustment

5.3.1 Hydraulic track width adjustment

The machine has an infinitely variable track width adjustment.

The track width of the machine can be adjusted between 1800 mm and 2250 mm to 2400 mm depending on the wheels mounted.

On Pantera W, the track width is 2,250 mm to 3,000 mm.

- The track width is adjusted and displayed via the AMADRIVE.
- When driving on public roads, the wheels are not allowed to protrude over the outer dimensions of the machine.

For France only: if the track width is not adjusted small enough for road travel, the AMADRIVE will display a warning message and limit the speed.

The track width is entered via the AMADRIVE and adjusted during an automatic adjustment drive.

5.4 Pantera-W with maximum track width of 3 metres

The transport width of the Pantera-W is 2.75 m.

- Observe the country-specific guidelines for the maximum permissible width of the vehicle on public roads..
- When travelling on roads, reduce the track width so that the transport width of 2.75 m is maintained.

The maximum width of the machine is 3.46 m.

Track width for travelling on roads

Track width 3.0 m

5.5 Pantera H with hydraulic height adjustment

The hydraulic height adjustment is used for lifting the machine on the field in order to increase the free passage under the machine.

- The machine height is adjusted and displayed via AMADRIVE.
- Always completely raise / lower the machine.
- Lower the machine again for travelling on the road.

DANGER

Risk of accident from the raised machine tipping over as a result of the higher centre of gravity.

Always drive with great caution on slopy terrain.

If tipping to the side occurs during the height adjustment due to a fault, cancel the procedure and lower the machine.

Machine lowered (default position)	Machine raised (only for driving on the field)
	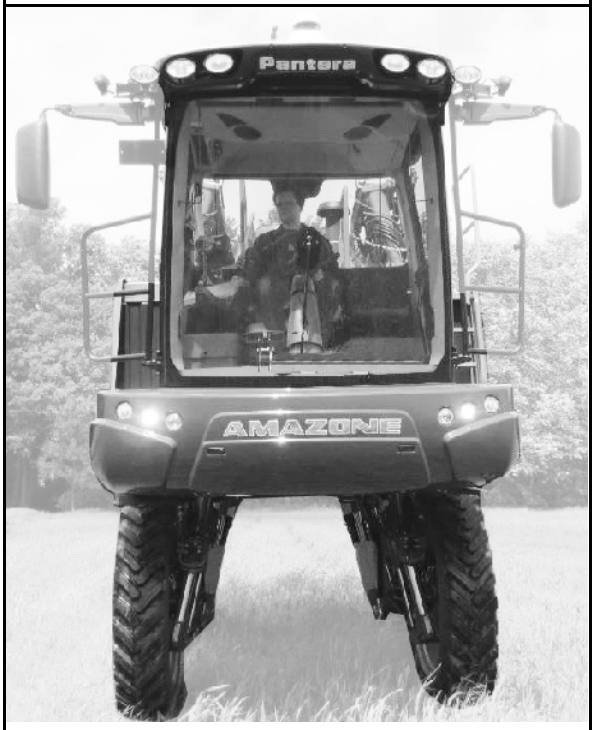

5.6 Steering

Select the steering via AmaDrive according to the requirements.

2W AUTO 2-wheel steering

possible when in road and field mode!

- The front wheels are steered with the steering wheel.
- The automatic steering system keeps the rear wheels parallel to the longitudinal axle.

4W AUTO (yellow) 4-wheel steering

Only possible when in field mode!

- Steering of all four wheels is carried out using the steering wheel.

→ Above 6 km/h, the 4-wheel steering is limited.

→ Above 12 km/h, the 4-wheel steering is switched off.

4W AUTO (green) Crab steering with automatic rear wheel steering

Only possible when in field mode!

- Steering of all four wheels is carried out using the steering wheel.

4W MAN Manual rear wheel steering

Only possible when in field mode!

- For manual steering of the rear wheels using AmaPilot.
- The front wheels are steered with the steering wheel.

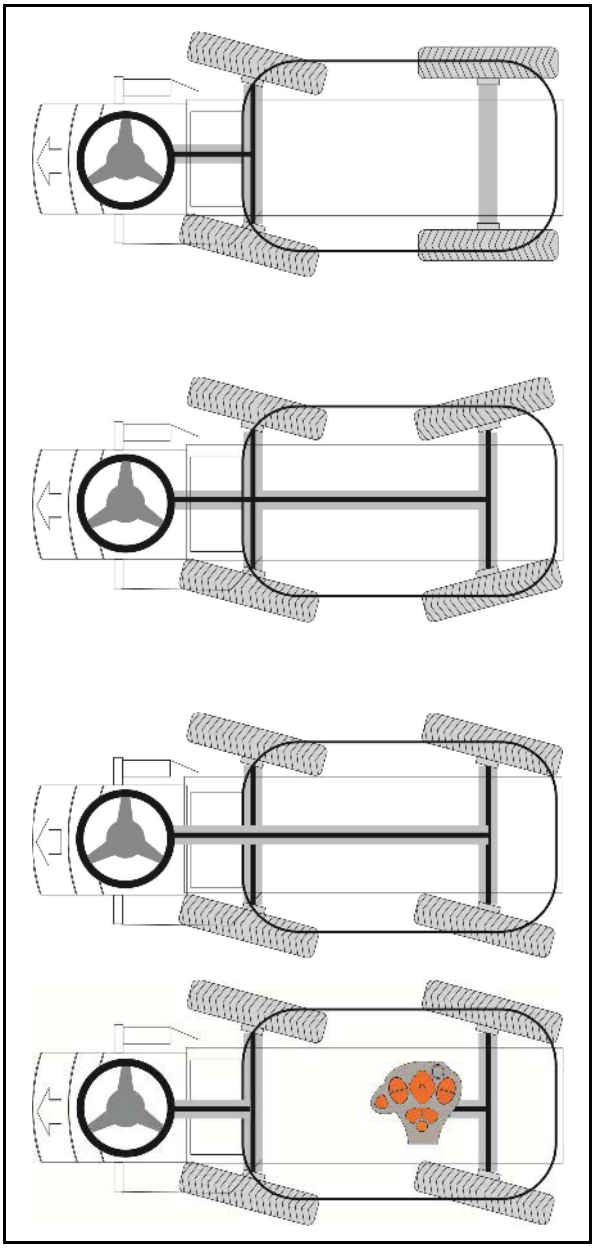

After starting the engine:

- the two-wheel steering system is activated.
- the rear wheels automatically align to the direction of driving.

Rear wheel steering safety function: The rear wheel steering is deactivated when the driver leaves his seat.

Reactivate the rear wheel steering using the driving lever (see Amadrive message).

→ The rear wheels can steer immediately!

5.6.1 Perform a track correction

CAUTION

- **Perform the track correction with heightened caution.**
- **Do not perform track corrections in public areas.**

- Perform the track correction every day.
- Perform the track correction with:
  - low forward speed,
  - 4-wheel drive switched on.

Perform a track correction, front

1. Turn the steering wheel to the left as far as it will go and keep it there.
2. Keep the button pressed forwards for a minimum of three seconds.
3. Let go of the button and then turn the steering wheel to the right as far as it will go and keep it there.
4. Keep the button pressed forwards for a minimum of three seconds.
5. Let go of the button and then turn back the steering.

Perform a track correction, rear

1. Turn the manual rear-wheel steering (via the multi-function stick) to the left as far as it will go and keep it there.
2. Keep the button pressed backwards for a minimum of three seconds.
3. Let go of the button and then turn the manual rear-wheel steering (via the multi-function stick) to the right as far as it will go and keep it there.
4. Keep the button pressed backwards for a minimum of three seconds.
5. Let go of the button and then turn back the steering.

After correcting the track, drive a short distance straight ahead and check the alignment of all of the wheels. Repeat the track correction if necessary.

5.7 Traction control system

The machine is equipped with an automatic traction control system.

The electronic traction control system continues to monitor each wheel and regulates the drive torque of the wheel motors.

5.8 Wheel gears

The wheel motor transmits its power to the wheel through the wheel gear.

The wheel gears are available in 2 reduction stages.

- Gear reduction 1:23.5 - Standard
  - Standard
- Gear reduction 1:30
  - Optional (Pantera+)
  - Increased torque for rides uphill uphill
  - Maximum speed is limited to 40 km/h

5.9 Mudguards

Mudguard width 550 mm

- Standard
- Total width of the machine: 2550 mm

Mudguard width 700 mm

- Optional
- Total width of the machine: 2865 mm
- Machine is equipped with warning signs

When using the wide mudguards in road traffic, please observe the country-specific specifications for the permissible total width of the machine.

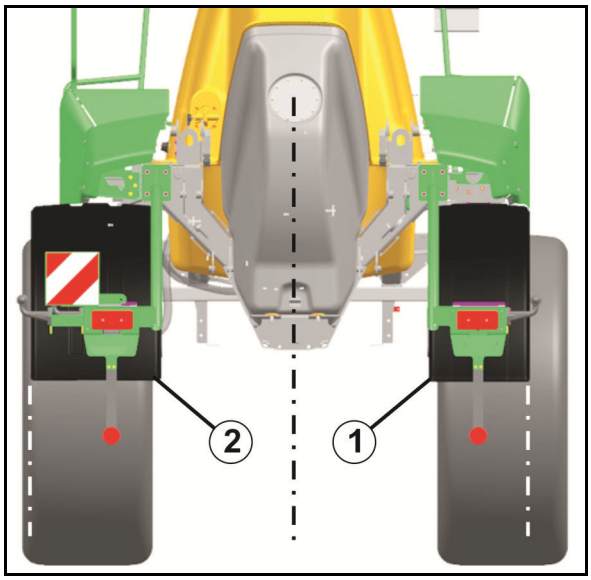

5.10 Hydro-pneumatic spring suspension

The hydro-pneumatic spring suspension contains an automatic level regulation device independent of the load status.

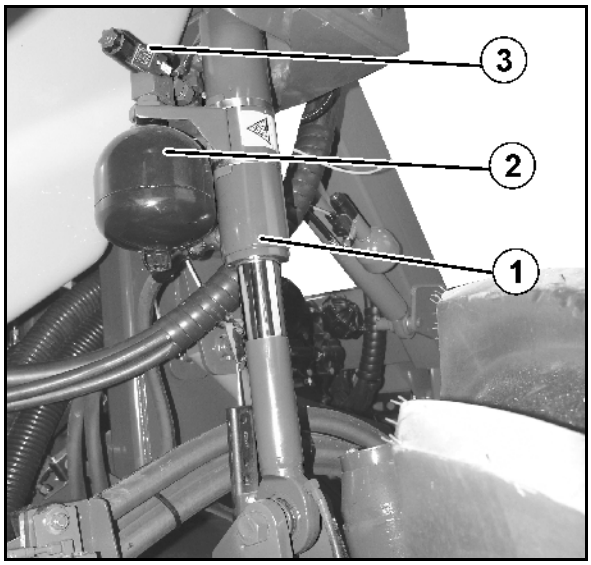

(1) Hydraulic cylinder

(2) Pressure accumulator

(3) Valve unit

Before loading the machine, lower it using the hydropneumatic spring suspension.

- To do so, the oil is drained from the cylinders of the spring suspension.
- This prevents swinging up of the lashed machine.
- Lowering and lifting of the machine via AmaDrive, see section about AmaDrive.

DANGER

Risk of crushing parts of your body between the running gear and the body when lowering the machine!

Instruct persons away from the machine before lowering the implement.

CAUTION

Risk of colliding machine parts when lowering the machine.
The track width must be previously set to the minimum value:

Pantera: 1.95 m / Pantera-W: 2.40 m.

5.11 Brake system

The hydraulic disc brakes are controlled pneumatically via membrane cylinders.

This is activated using the foot pedal in the cabin.

A hydraulic parking brake in the wheel gear is activated using the rocker switch in the cabin.

Both axles are fitted respectively with an automatic load-dependant braking force regulator (ALB).

Setting data dependent on the axle load:

	Front axle Input pressure: 8 bar		
	Axle load	Bellows pressure	Output pressure
Empty	6200 kg	85 bar	5,6 bar
Loaded	8000 kg	125 bar	8.0 bar

5.12 Foldable wheel chocks

Each of the wheel chocks is attached with a thumb bolt in the front storage compartment under the tractor cab.

Put the foldable wheel chocks into operating position by pressing the button and apply directly on the wheels before uncoupling.

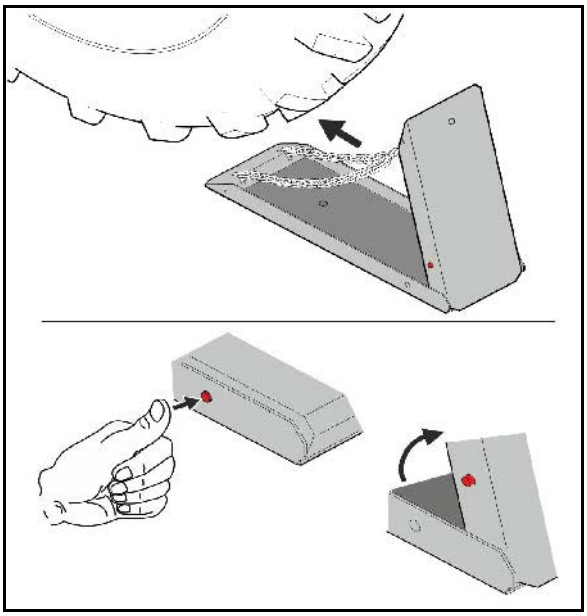

5.13 Hydraulic system

The machine has

- a hydrostatic wheel drive,
- a hydraulic spray pump drive,
- a hydraulic steering system,
- a hydraulic cylinder for the track adjustment, for boom height adjustment and for folding the boom
- a hydro-pneumatic suspension.

The machine has 3 hydraulic pumps that are flanged direct to the diesel engine. The hydraulic components are mounted at different locations on the machine.

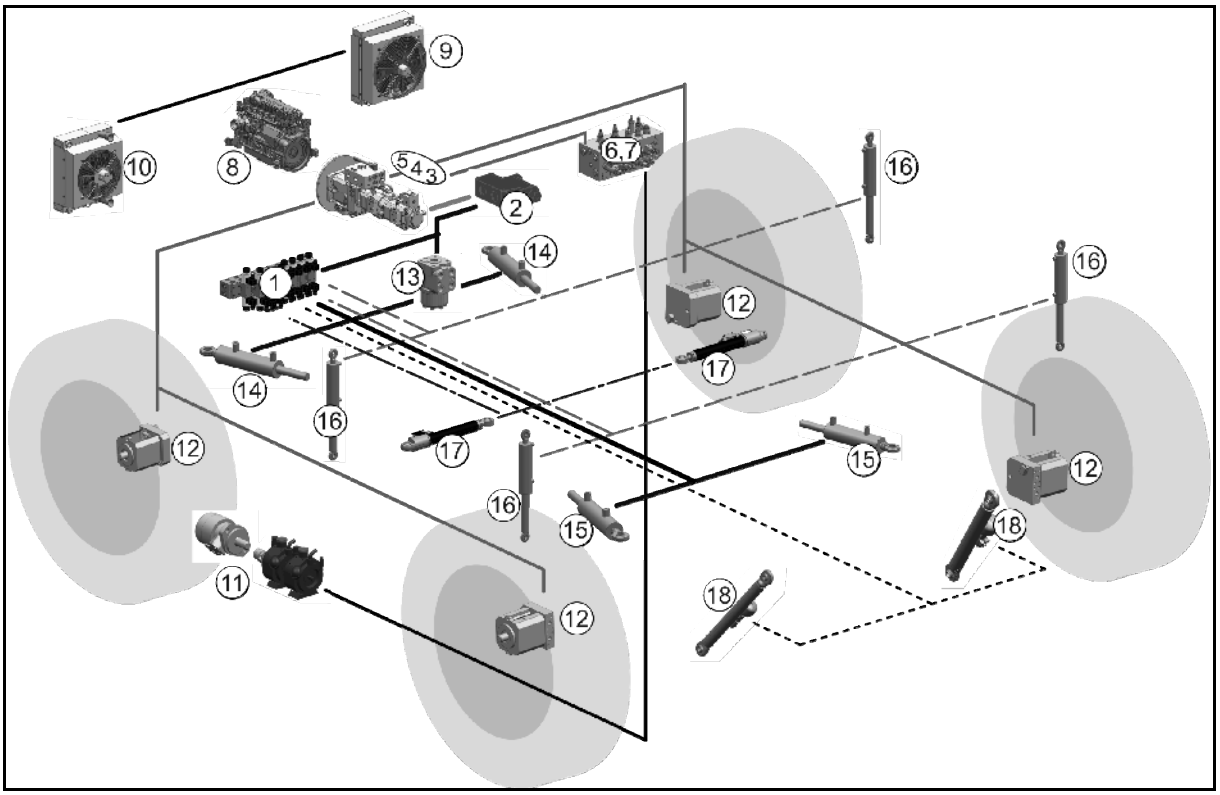

(1) Valve block 1
(2) Priority valve
(3) Constant pressure pump
(4) Load sensing pump
(5) Driving pump
(6) Valve block 2
(7) Retarder brake
(8) Diesel engine
(9) Radiator fan 1
(10) Radiator fan 2
(11) Sprayer pump drive
(12) Wheel motor
(13) Orbitol steering system
(14) Front steering system
(15) Rear steering system
(16) Spring suspension
(17) Track
(18) Boom

5.13.1 Hydraulic pumps

- The drive pump drives the 4 parallel switched wheel motors in a closed circuit.
- The feed pump supplies the system with leakage oil and flushing oil.
- The pump for the drive of the spraying pumps and the fan motors is a regulating pump load sensing controller. The operating pressure of the pump is adjusted automatically depending on the output required.
- The regulating pump with constant pressure controller supplies the steering system and hydraulic cylinder with oil.

Adjusting and checking the system is carried out in the factory. Normally, the settings do not need to be corrected.

The operator requires special tools and special knowledge of the system in order to adjust the highest pressure, the operating pressure and the speed. This is why the adjustment work may only be carried out in the factory.

5.13.2 Hydraulic wheel motors and gearbox

- The 4 motors and the driving pump must all be precisely adjusted to each other.
- Have all repair work or adjustments carried out by a specialist workshop.

5.13.3 Hydraulic oil tank

(1) Hydraulic oil tank
(2) Inspection glass
(3) Fill opening with integrated oil filter
(4) Electric sensor for measuring the oil level

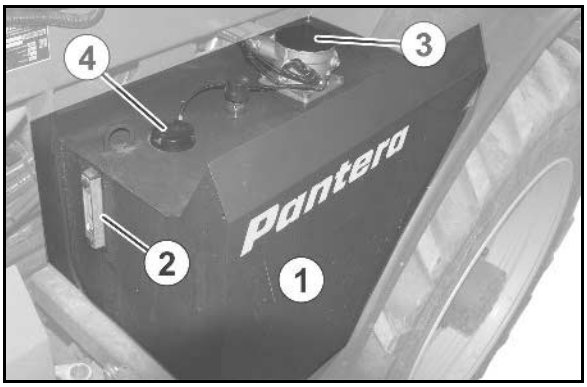

5.14 Radiator

The machine is equipped with a total of four radiators on both sides behind the cabin.

Right side:

- Radiator for the engine cooling water
- Condenser of air conditioner

Left side:

- Radiator for hydraulic oil
- Radiator for charged air of the turbocharger

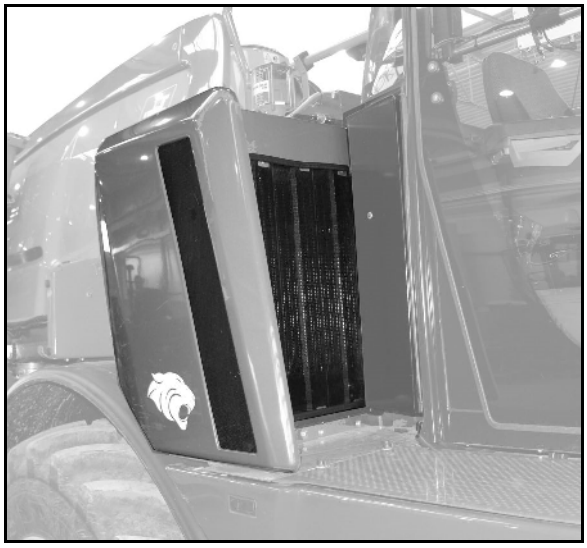

The air flow through the radiator may not be obstructed.

For this reason the radiators have to be checked on a regular basis and cleaned using compressed air.

5.15 Driver's cabin

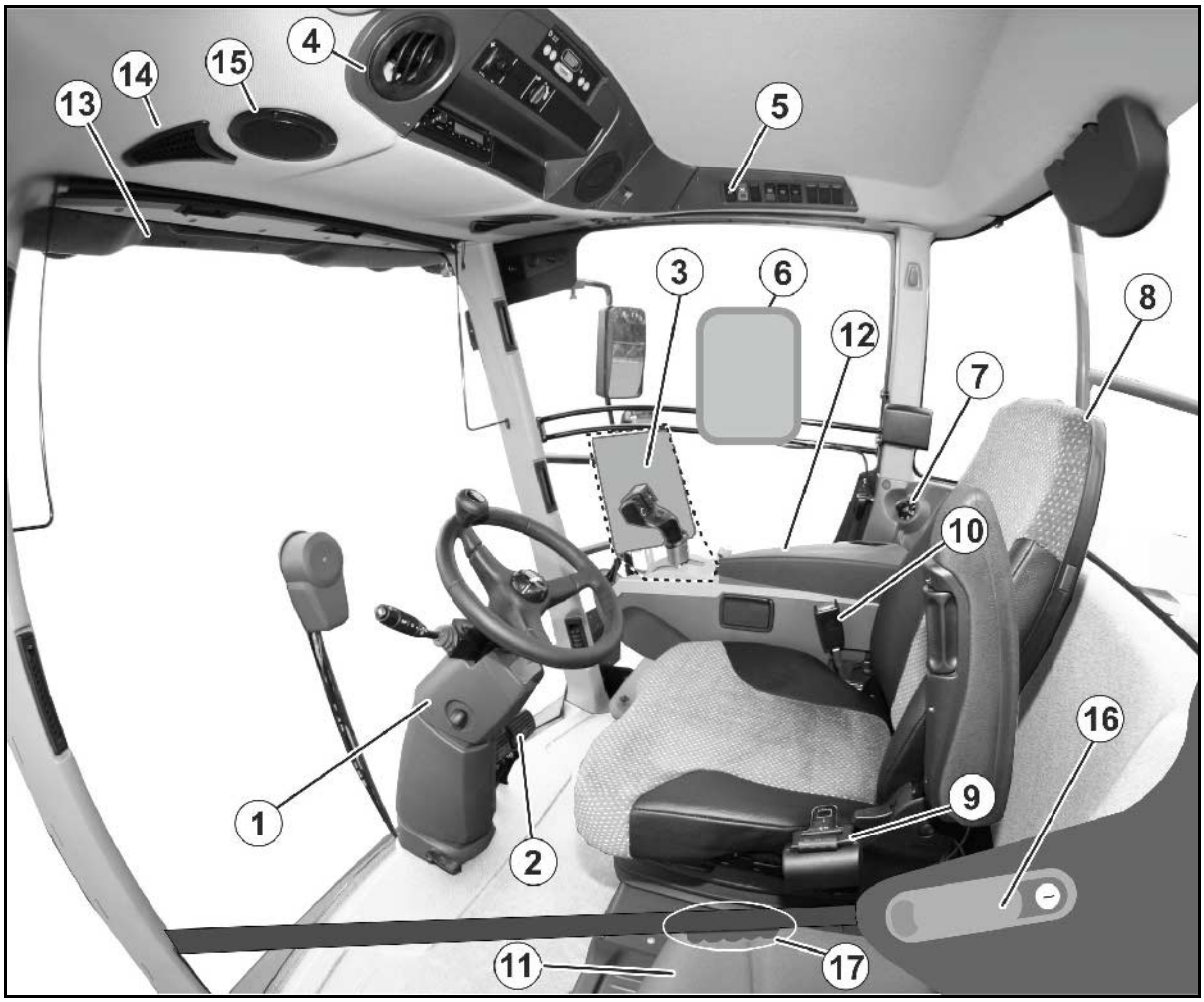

(1) Steering column with multi-function switch
(2) Brake pedal
(3) Field sprayer operation
(4) Operating elements: Comfort and light
(5) Operating elements: Safety and maintenance
(6) Control terminal AMADRIVE
(7) Ignition lock
(8) Driver's seat
(9) Seat belt for wearing on the drivers seat
(10) Seat belt buckle
(11) Folding helper's seat with cooling compartment underneath
(12) Height-adjustable and folding armrest and operating unit
(13) Sunblind
(14) Ventilation nozzles
(15) Loudspeaker
(16) Door handle with lock
(17) Door opening on the inside

- The helpers seat must only be used for manoeuvring trips.
- Drive the machine only when wearing the seat belt.

5.15.1 Foldable access ladder

You can access and exit the cabin via the foldable ladder.

- The access ladder is lowered and raised via a switch in the cabin.
- The AMADRIVE displays the position of the ladder.

The ladder can also be folded down when the diesel engine is turned off.

WARNING

Risk of injuries from falling from the cabin.

- When leaving the cabin, make sure that the ladder has been lowered completely.

  You cannot see if the ladder has been lowered from inside the cabin.
- Climb up and down the ladder facing the machine (3 point rule).

An acoustic signal sounds as soon as the driver leaves the drivers seat if the ladder has not been lowered completely.

5.15.2 Steering column with multi-function switch and brake pedal

The steering column has the following functions:

(1) Steering wheel

(2) Multi-function switch

(3) Steering column adjustment, forwards / backwards

(4) Steering wheel adjustment, forwards / backwards

(5) Steering wheel adjustment, higher / lower

(6) Brake pedal

(7) Light module

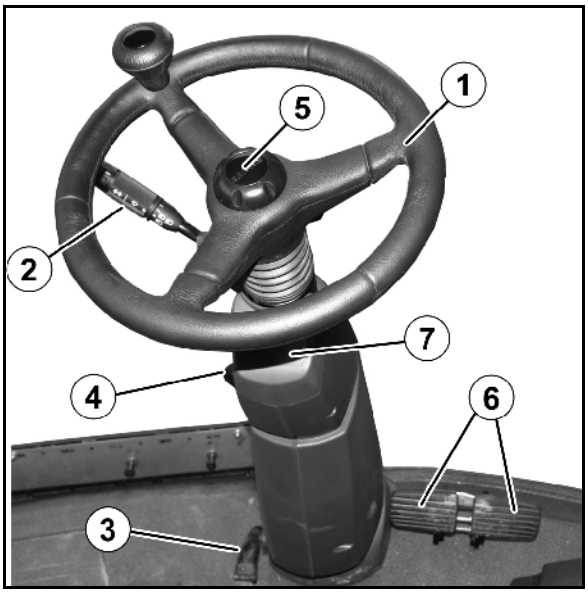

Multi-function switch

Press in: Horn

Upwards: High beam

Downwards: Dipped beam

To the front: direction indicator, right side (in field mode: side-view floodlight, right side)

To the rear: direction indicator, left side (in field mode: side-view floodlight, left side)

Press in the ring:

→ Windscreen washer system

Turn the ring:

→ Windscreen wiper, switch on / fast

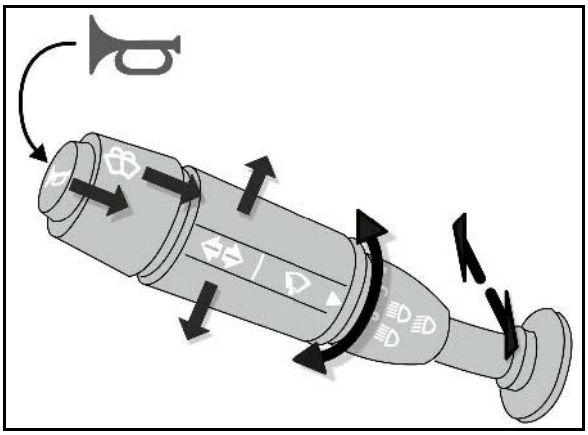

Brake pedal

Always use the brake pedal for emergency braking.

- The machine can be slowed down using
  - o the brake pedal.
  - o the driving lever.

→ The delay via the driving lever may be sufficient depending on the driving situation.

- When braking using the brake pedal, the slowing down is carried out by the pneumatic brake system and the hydrostatic drive.

After performing the braking using the brake pedal, the driving lever must briefly be moved to the neutral position before continuing to drive.

Braking with the brake pedal

- Until standstill:

→ Before continuing to drive, briefly put the driving lever in the neutral position.

- To reduce the forward speed:

→ After the brakes are released, the machine accelerates to the speed selected using the driving lever.

Light module

(1) No function
(2) Battery charger lamp
(3) Indicators of the machine
(4) High beam display
(5) No function
(6) No function

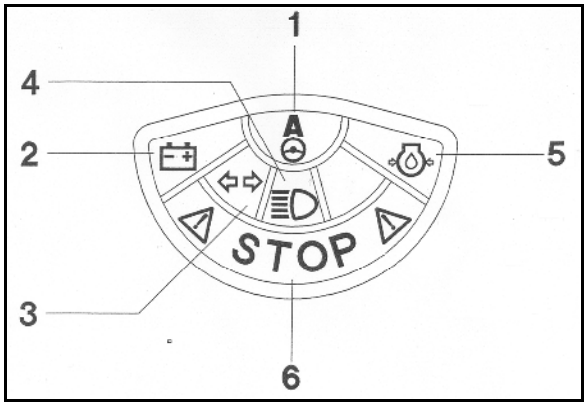

5.15.3 Adjusting the driver's seat

The drivers seat is spring suspended and has various adjustment options.

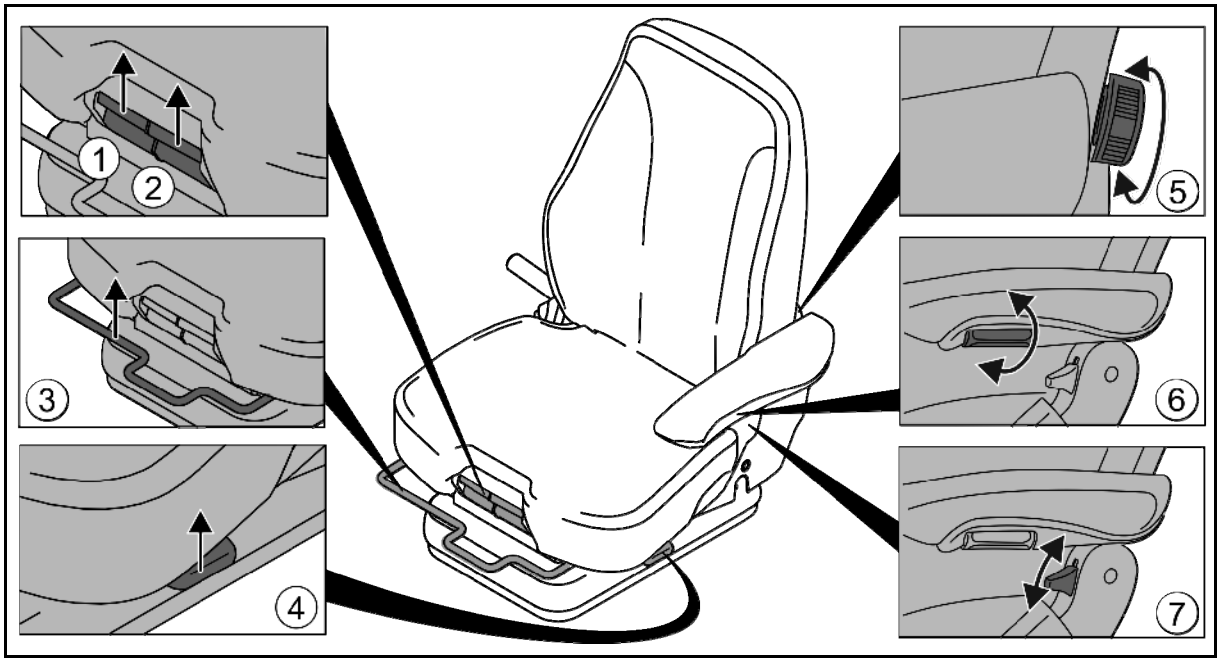

Adjustments:

(1) inclination of the seat surface

(2) move the seating surface to the front / rear

(3) move the seat to the front / rear

(4) seat height

(5) backrest

(6) inclination of the armrests

(7) inclination of the backrest

5.15.4 Control panel

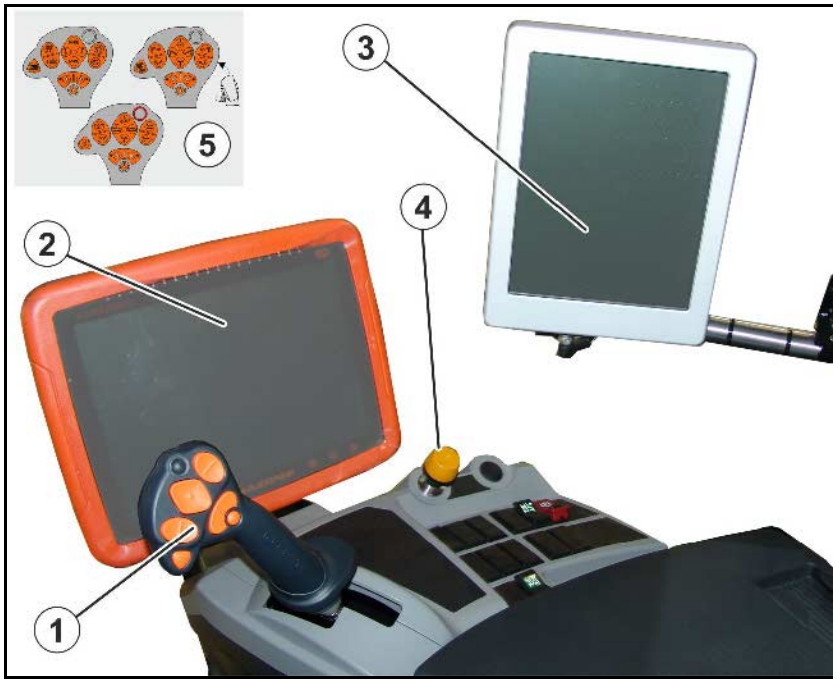

(1) Driving lever with multi-function stick

(2) Control terminal ISOBUS

(3) Control terminal AMADRIVE

(4) Emergency shutdown

(5) Sticker with the AMAPILOT functions

When operating the multi-function handle, also observe the operating instructions of the software ISOBUS!

Switches and buttons on the control panel

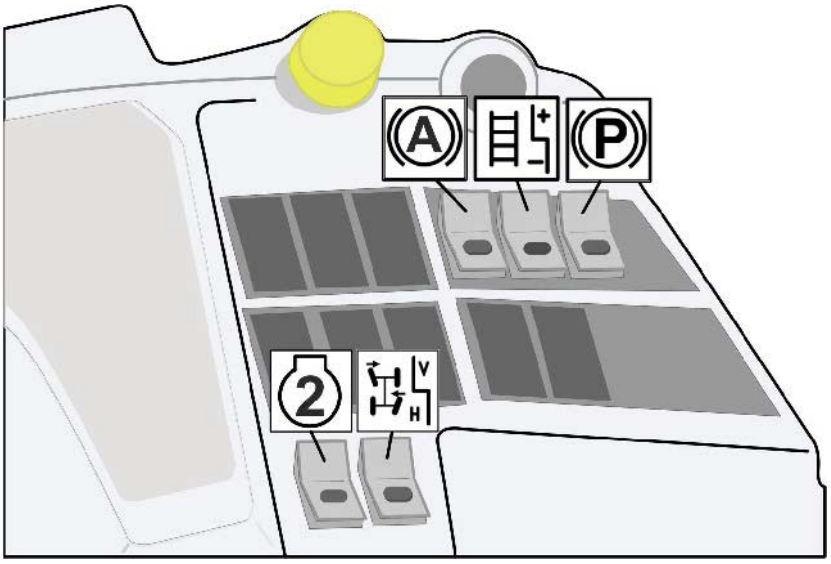

- AutoHold button as an assistant when moving off on slopes

  When the machine is at a standstill, AutoHold activates the parking brake.

  → When the driving lever is pushed forward again, the parking brake is automatically released.

- Button for actuating the cab access ladder
  - o Position **+**: Lifts the ladder
  - o Position **-**: Lowers the ladder

- Actuate / release the parking brake button

→ Release the parking brake only when simultaneously actuating the foot brake

- Button for aligning the track

- Switch the external hydraulic motor drive on / off (via hydraulic connection at the rear)

5.15.5 Emergency shutdown

Performing an emergency shutdown

By pressing the operating button, the traction drive is interrupted, the motor is switched off and the machine is braked until it comes to a stand-still.

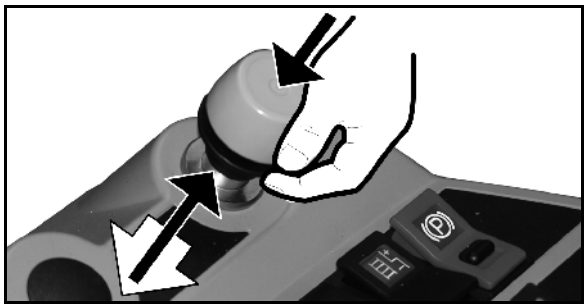

Fig. 1

Deactivating the emergency shutdown and starting the machine again

1. Activate the parking brake using the switch.
2. Unlock the emergency shutdown by simul-taneously pressing on the operating button and pulling on the black plastic ring.
3. Switch off the ignition.
4. Start the motor normally.

5.15.6 Operating elements, Comfort and Light

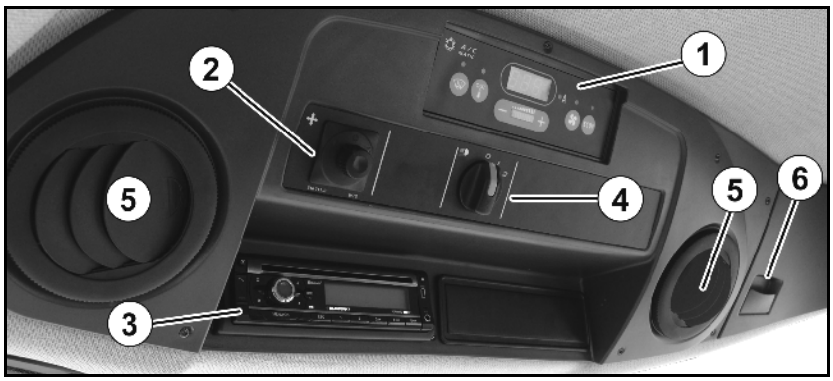

Fig. 2

On the inside of the roof, you will find the switch for the ventilator, the heater, the air conditioner, the travelling lights, the mirror adjustment and the radio.

(1) Automatic air-conditioning system

(2) Mirror adjuster switch

(3) CD radio with Bluetooth hands-free system

(4) Rotary switch with parking light and driving light

(5) Ventilation nozzles

(6) Cooling compartment

5.15.7 Operating elements, Safety and Maintenance

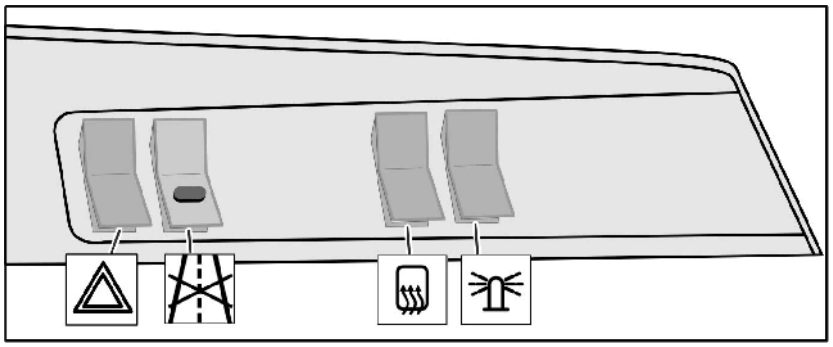

- Hazard warning signal switch
- Road / field travel switch with locking mechanism for the road travel position
- Mirror heater switch
- Warning beacon switch (optional)
- Warning light and 3-level switch for air filtration

5.15.7.1 Road travelling / field travelling

Road mode: Push rocker switch downwards.

- Only two-wheel steering possible.
- No cruise control function.
- Warning when driving with ladder lowered.
- Warning: Track width set according to the type approval.

Field mode: Unlock rocker switch and push upwards.

- Speed limited to 20 km/h.
- Warning when driving with ladder lowered.

5.15.8 Rear right side in the cabin

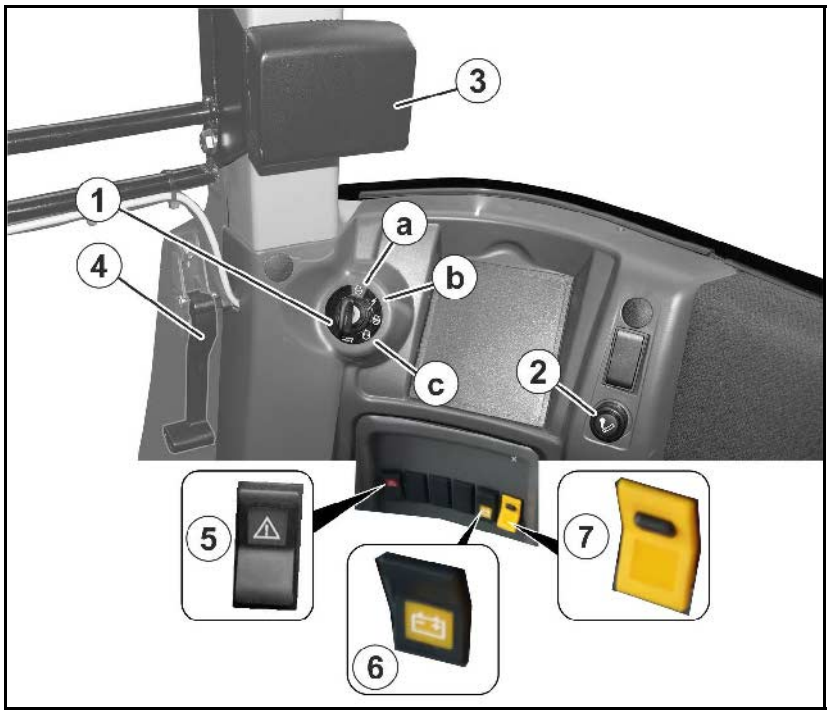

(1) Ignition lock

(a) Engine off

(b) Power supply on

(c) Start the engine

(2) Cigarette lighter

(3) Drink holder

(4) Unlocking device for the emergency exit

(5) Override button

(6) Main switch

- Switch on the power supply before starting to drive.
- The power supply is interrupted 2 hours after the ignition key is removed.

(7) Switching off the power supply prematurely (e.g. for maintenance work)

→Actuate the yellow switch with lock at the same time as the main switch.

- 12V socket behind the driver's seat

Override button

If the cooling water is low, the motor stops automatically.

After pressing the Override button, the motor can be started again and the machine can be run for 30 seconds.

The button can be pressed several times.

If there is an error in the motor control unit, then the Override button will flash, see AMADRIVE.

5.15.9 Armrest

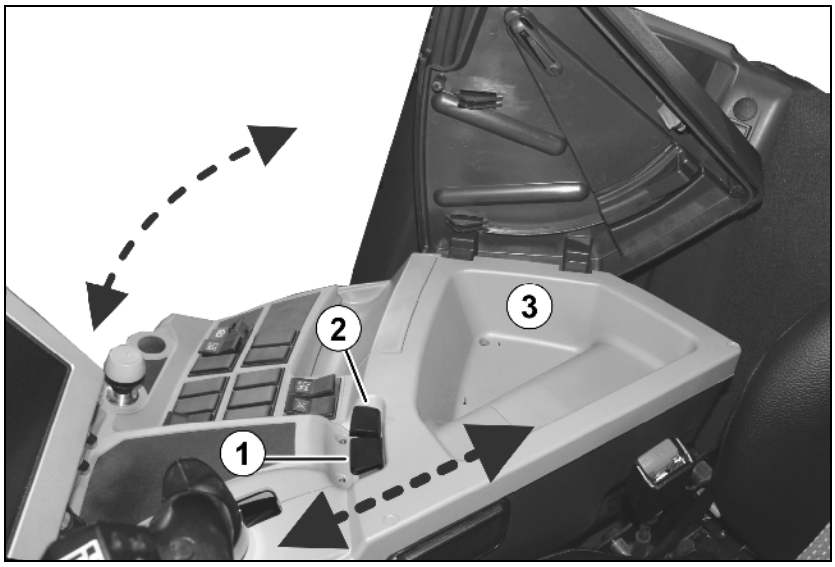

(1) Moving the armrest

(2) Pivoting the armrest

(3) Storage compartment under the armrest

5.15.10 Cooling compartment and ashtray

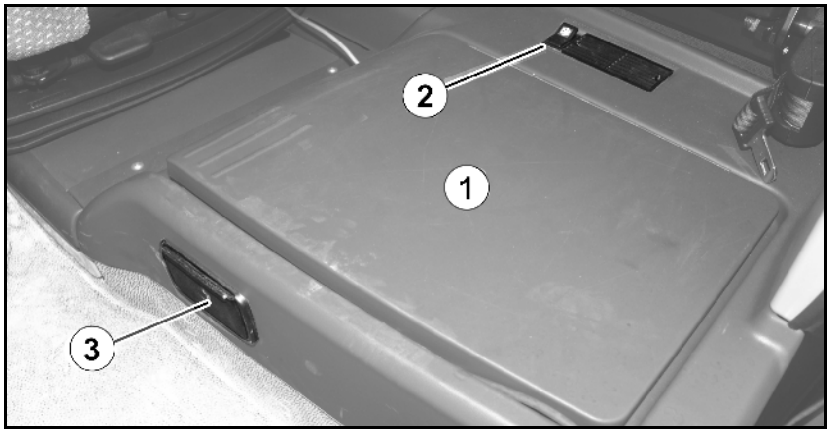

Under the helpers seat:

(1) Cooling compartment

(2) Switch for the cooling compartment

(3) Ashtray

5.15.11 AmaTron / AmaPad control terminal to control the field sprayer

AmaTron 4	AmaPad 2

Base functions:

- entry of the data in the spraying technology.
- entering the job-related data.
- controlling the field sprayer to change the spray rate used in spraying operation.
- the operation of all functions on the sprayer boom.
- the monitoring of the field sprayer during spraying operation.

GPS options

- Fully automatic part width section control
- Parallel driving aid (integrated in the GPS switch application)

5.15.12 Driving lever with multi-function stick

5.15.13 Driving lever

The driving lever is used for

- o continuously variable accelerating and decelerating of the vehicle,
- o driving forwards and backwards.

(1) maximum speed driving forwards, accelerations

(2) neutral, park, braking

(3) maximum speed driving backwards

→ The speed is dependent on the displacement of the driving lever

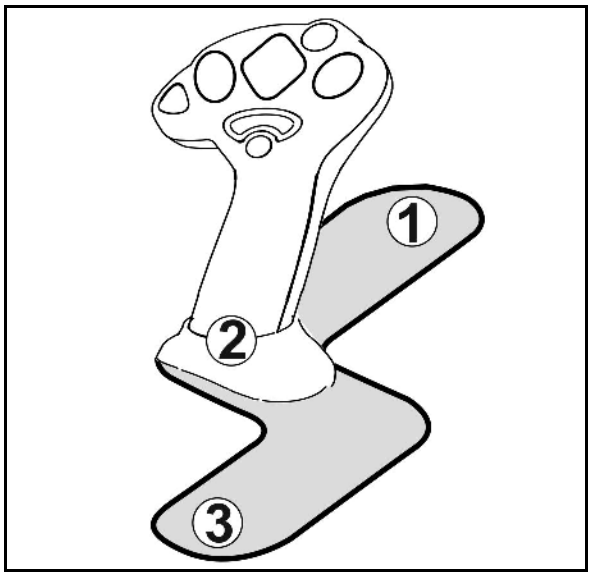

> A trailer being towed is also braked via the driving lever using the pneumatic brake system.

5.15.14 AmaPilot+ multi-function stick

The implement functions can be executed using the AmaPilot+.

AmaPilot+ is an AUX-N control element with freely selectable button assignment.

A default button assignment is pre-configured for every Amazone ISOBUS implement.

The functions are spread over 3 levels and can be selected by pressing with your thumb.

In addition to the standard level, two other control levels can be switched.

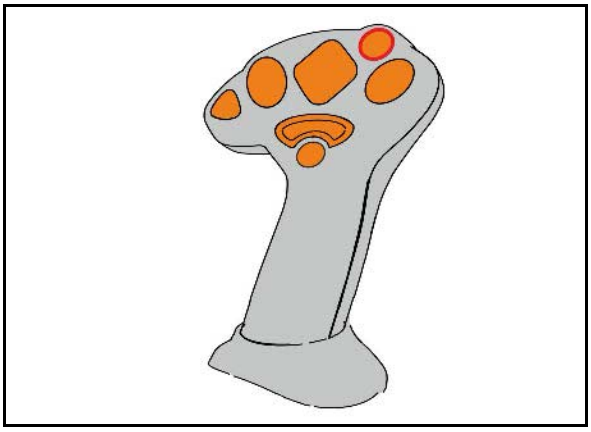

A sticker with the default assignment can be stuck in the cab. For a freely assigned key assignment, a new sticker can be applied over the default assignment.

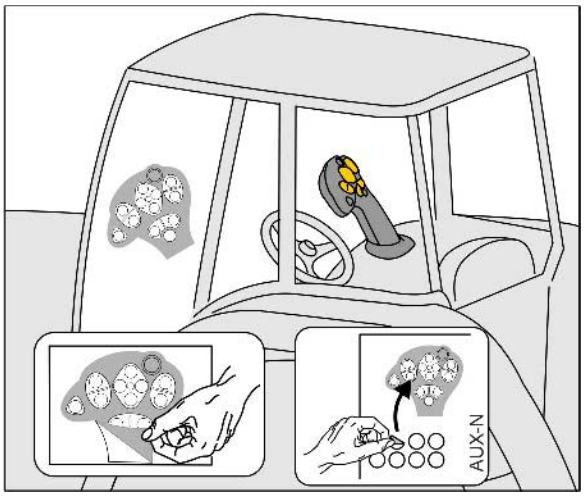

- Standard level,
  Illuminated button is green.

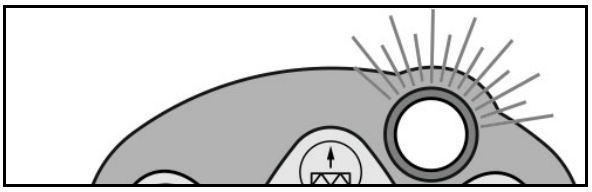

- Level 2 when trigger on the back is held,
  Illuminated button is yellow.

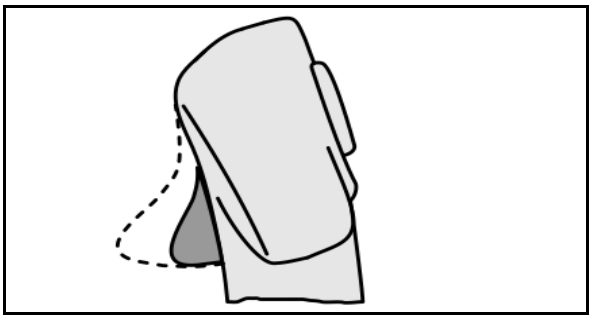

- Level 3 after pressing the illuminated but-
  ton,
  Illuminated button is red.

AmaPilot+ with fixed assignment / default assignment

Standard level, green

Switch on / off boom part width sections, left side	Switch on / off boom part width sections, right side
Switch spraying on / off	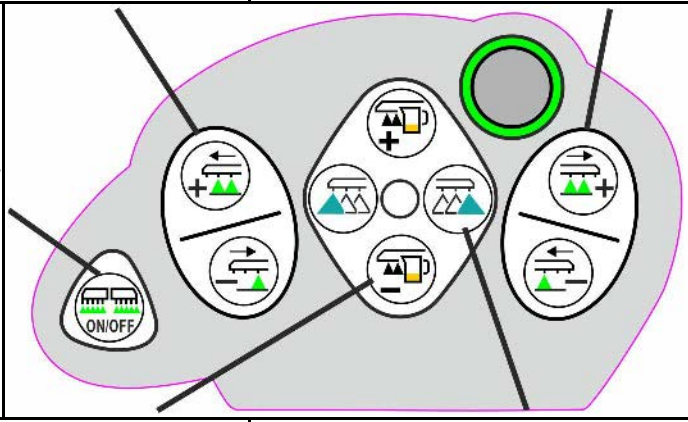
Reduce / increase application rate	Boundary nozzles left side / right side

Level 2, yellow

Angle in / out boom left side	Angle in / out boom right side
DistanceControl Mirror boom	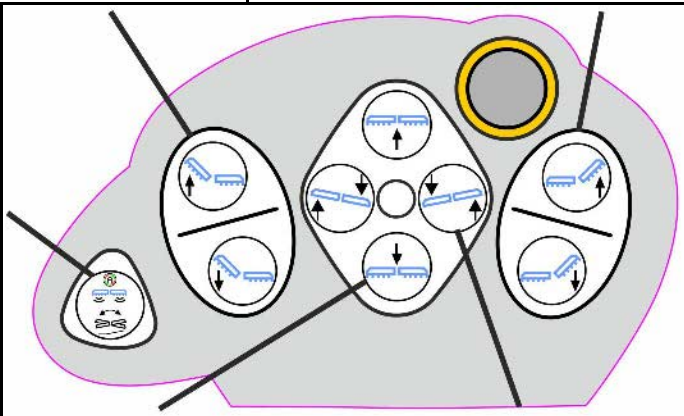
Raise / Lower boom	Angle of sprayer boom

Level 3, red

Fold boom on left side in / out	Fold boom on right side in / out
Lock / unlock swing compen- sation	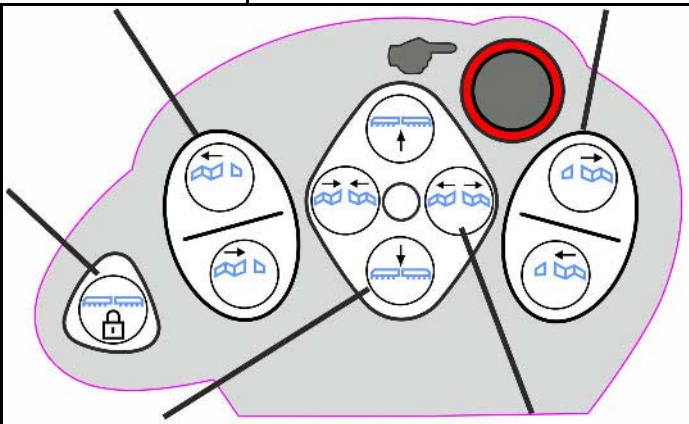
Raise / Lower rod boom	Fold boom in / out

Functions on all levels:

Rear wheel steering to the left	Rear wheel steering to the right
Switchover 2 <->4 wheel steering	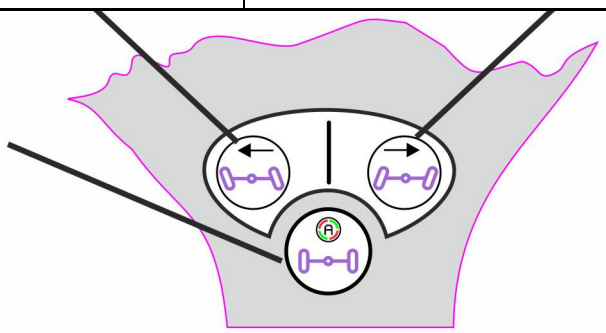

5.15.15 Air conditioner

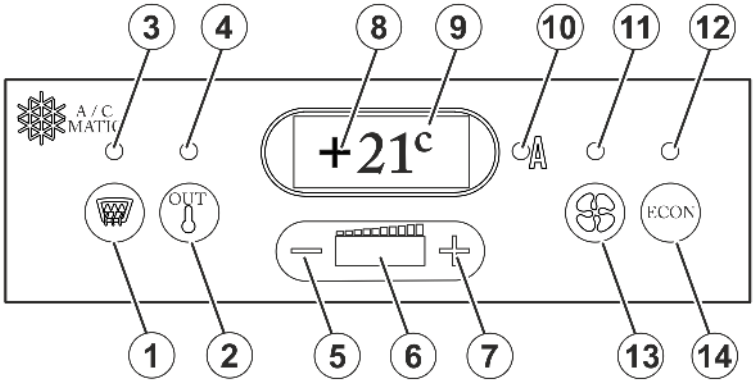

(1) Switch on and off / REHEAT - Function

(2) Toggle set temperature display / outside temperature display.

(3) LED: Lights up when REHEAT is switched on.

(4) LED: Lights up when the outside temperature is shown in the display.

(5) Setting the desired cabin temperature down or fan speed.

(6) LED bar display indicates the evaporator fan speed of 0 - 100%.

(7) Setting the desired cabin temperature upwards or fan speed when the manual fan speed has been selected.

(8) Three-digit seven segment display for showing the desired cabin temperature / outside temperature / error codes in event of malfunction.

(9) Displays the unit in Celsius or Fahrenheit

(10) LED: Indicates fully-automated mode.

(11) LED: Lights up when the evaporator fan speed has been set manually.

(12) LED, lights up when in ECON mode.

(13) Toggle button evaporator fan speed manual / automatic

(14) Switch on the ECON mode (Compressor off)

Put the automatic air conditioning system into operation

When the engine is standing still and the ignition is switched on, the evaporator fan speed reduces to 30 % of the nominal speed after 10 minutes. This takes place to prevent faster discharging of the battery.

The software version is displayed for 3 seconds after switching on the ignition. The controller carries out a self-test. The executing of the self test takes about 20 seconds.

In order to prevent faulty temperature controlling of the automatic system, close the cooling compartment flap immediately after use.

Set the cabin temperature

The cabin temperature is displayed in display field 8. The cabin temperature can be adjusted by pressing buttons 5 and 7.

- Reduce temperature: **-** Pressing once → -1° C
- Increase temperature: **+** Pressing once → +1° C

Set the evaporator fan speed

- **Automatically:** Button 13; LED 10 lights up.
- **Manually:** Press toggle button 13; LED 11 lights up. The manual fan speed is shown. You can set the desired speed using the buttons 5 (-) and 7 (+).

Switch on ECON mode

The compressor of the air conditioner is switched off in ECON mode.

- Switch on ECON mode: Press button 14; LED 12 lights up.

  The evaporator fan speed currently indicates 40% on the light strip display (6). The evaporator fan and the heater are also controller automatically in ECON mode.
- Switch on ECON mode: Select button 14.

REHEAT mode

(Defog the cabin windows)

- Switch on REHEAT mode: Press button 1; LED 3 lights up. REHEAT mode is activated.

  The fan speed is 100% and after switching the button 13, can be controlled manually using button 5 (-) and 7 (+).

  The compressor is switched on continuously in REHEAT mode for dehumidifying the room air.
- Switch off REHEAT mode: Press button 1 again

Toggle ° Celsius / °F

- Press button 2 and 5 at the same time for approx. 3 seconds.

  Pressing the buttons 2 and 5 again switches the display back to degrees Celsius.

Malfunction / fault (displayed flashing)

F0		Room temperature sensor fault
→	Blue	Switching outputs are switched off.
F1		Outlet air temperature sensor malfunction
→	Yellow	Switching outputs are switched off
F2		Outside air temperature sensor fault
→	Red	Switching outputs are still ready for operation

Important information about the air conditioner

CAUTION

1. **Avoid any contact with the refrigerant. Wear protective gloves and goggles!**
2. **When sprayed in your eyes, rinse with water immediately. Seek medical advice!**
3. **Have maintenance and repair work only carried out by a specialist workshop for refrigerant.**
4. **No welding tasks may be carried out on the refrigerant circuit and in the immediate vicinity - Danger of poisoning!**
5. **Maximum ambient temperature for refrigerant: 80° C**

5.15.16 Tractor cab air filtration with Category 4 safety status

Tractor cab air filtration with positive pressure control and activated charcoal filter against dust, aerosols and vapours (gases) according to DIN EN 15695-1.

This is prescribed for the application of several spray agents.

5.15.16.1 Description

Function

External air is cleaned through several filter stages and freed from harmful substances before it is conveyed to the cab. A minimum air supply is ensured by operating a separate air blower fan in an external housing. The operation of the air blower fan is independent of the settings of the air conditioning system.

The protective function is also ensured when the air conditioning is switched off. Depending on the equipment options, user protection in compliance with Category 3 or 4 according to DIN EN 15695-1 is achieved.

A pressure monitoring system is installed in the tractor cab.

Layout

In the cab roof, right side

(1) Warning light

If the cab pressure falls below 20 Pascal, the warning light illuminates.

(2) 3-level switch for setting the blower fan speed.

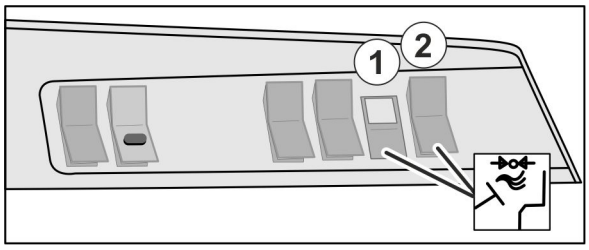

Air ducts in the roof

(1) Connecting supports
(2) Air ducts
(3) Locking plate, rear
(4) Locking plate, front

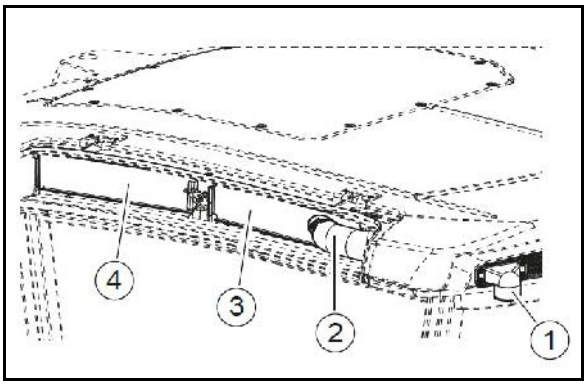

Filter housing on the machine

Filter housing

(1) Attachment point
(2) Fan compartment with electronics
(3) Activated carbon filter
(4) Aerosol filter
(5) Dust filter
(6) Air inlet
(7) Protective screen
(8) Handle
(9) Central connector
(10) Air outlet

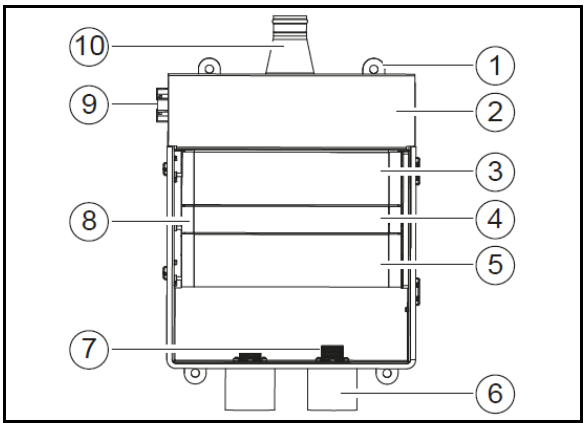

Pressure monitoring

There is a differential pressure switch in the tractor cab that monitors the minimum pressure in the cab interior. The differential pressure switch is installed on the floor at the rear of the right side of the cab.

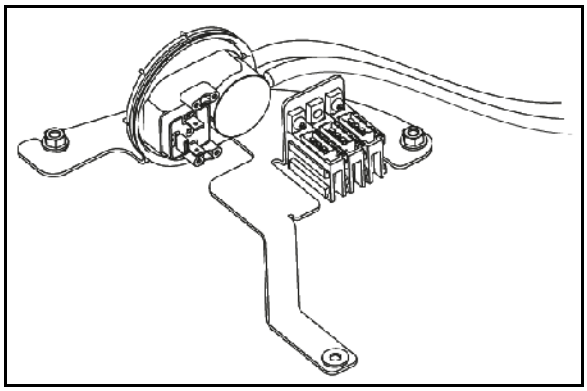

5.15.16.2 Operation

Before beginning operation:

- Check the filter screen at the air inlet of the filter box and clean if necessary.
- Perform a visual check of the inlet hose for leaks or damage.
- Check the cable routing for abrasions.

During operation:

- During operation with a new filter, select the lowest fan level. This ensures operation with a minimised external air volume flow. This has a positive effect on the service life of the filter.
- With increasing impurities, the air resistance in the filter cassettes increases. The cab pressure drops permanently and the warning light illuminates.

→ Increase the fan level manually by one level. The fan level can be increased twice.

The activated carbon filter has to be replaced every three months regardless of the operational hours.

5.15.17 Covers and compartments outside the cabin

Left side:

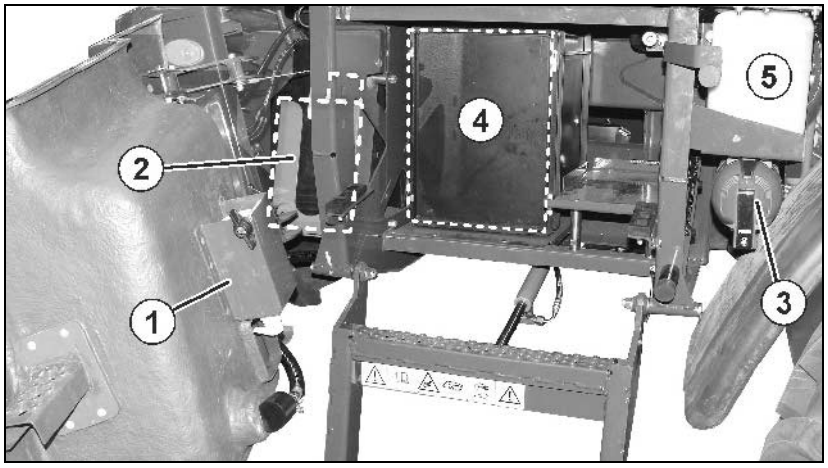

(1) Soap dispenser

(2) Fresh water tank

(3) Fire extinguisher

(4) Storage box

(5) Windscreen wiper water container

Front:

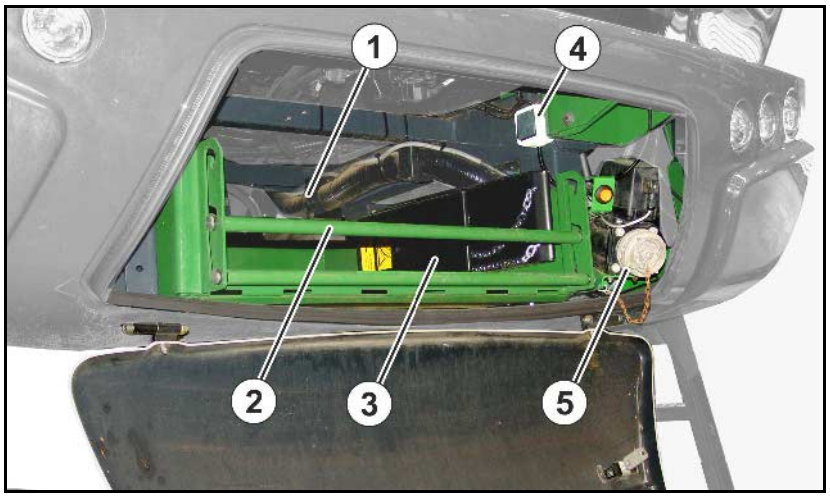

(1) Extraction hose storage (maximum payload 100 kg)

(2) Removable protective brace

(3) Wheel chock

(4) Switch for the lighting

(5) Pressure filling with stop button (option)

- Additional air reservoir for trailer brakes (with towing device for the trailer)

Right side:

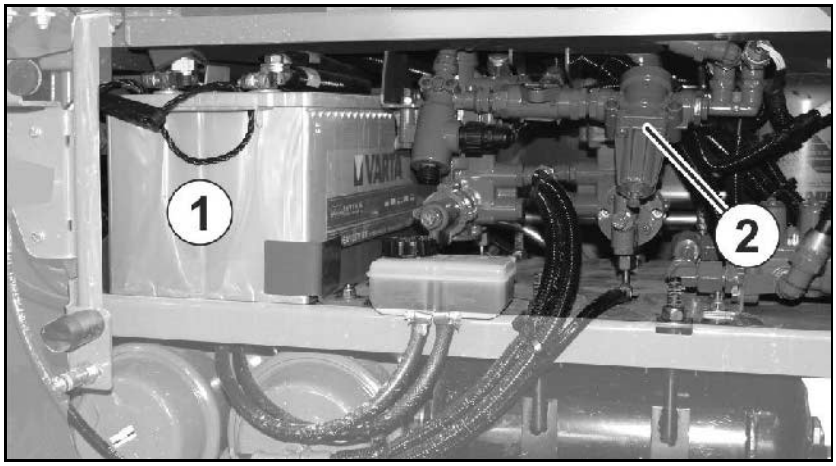

(1) Battery

(2) Brake system

5.16 Camera system (option)

WARNUNG

Verletzungsgefahr bis hin zum Tod.

Wenn nur das Kamera-Display zum Rangieren verwendet wird, können Personen oder Gegenstände übersehen werden. Das Kamerasystem ist ein Hilfsmittel. Er ersetzt nicht die Aufmerksamkeit des Bedieners für die unmittelbare Umgebung.

- **Stellen Sie vor dem Rangieren mit einem direkten Blick sicher, dass sich keine Personen oder Gegenstände im Rangierbereich befinden**

AMADRIVE is used as a display device for the cameras.

The machine can be equipped with two cameras.

- Selective display of the rear-view camera or the camera for the right front wheel.
- The rear-view camera is switched on automatically when reversing

Features:

- Viewing angle of 135°
- Heater and lotus coating
- Infrared night-view technology
- Automatic backlight compensation

(1) Rear-view camera for reversing safely.

(2) Camera for the right front wheel for driving through the tramline correctly.

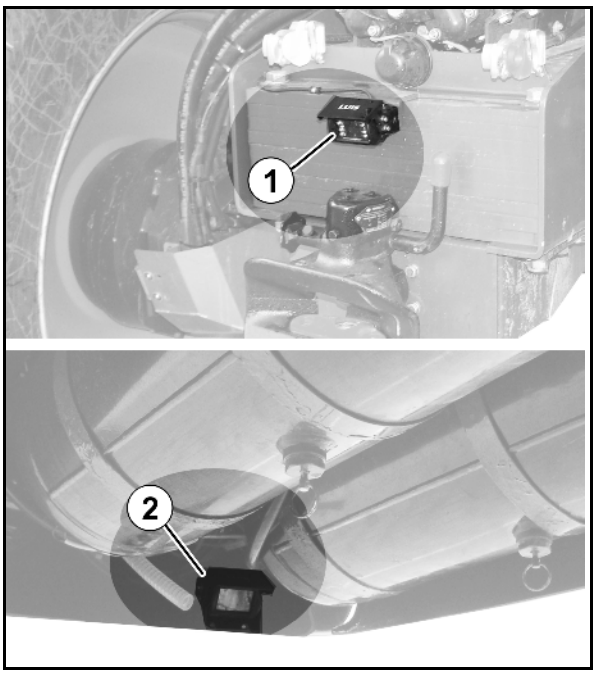

5.17 Working platform with ladder

Working platform with swivel-down ladder for reaching the drivers cabin and filling dome.

- The ladder is lowered or raised on the dash panel in the drivers cabin.

DANGER

Risk of accidents resulting from the ladder being pivoted down when driving.

Raise the ladder to the transport position when driving.

DANGER

Risk of falling when leaving the cabin.

Lower the ladder before leaving the cabin.

DANGER

Never climb into the spray liquid tank.

→ Risk of injury from poisonous vapours!

- **It is strictly forbidden to ride on the field sprayer!**

→ Riding on the machine creates a risk of falling!

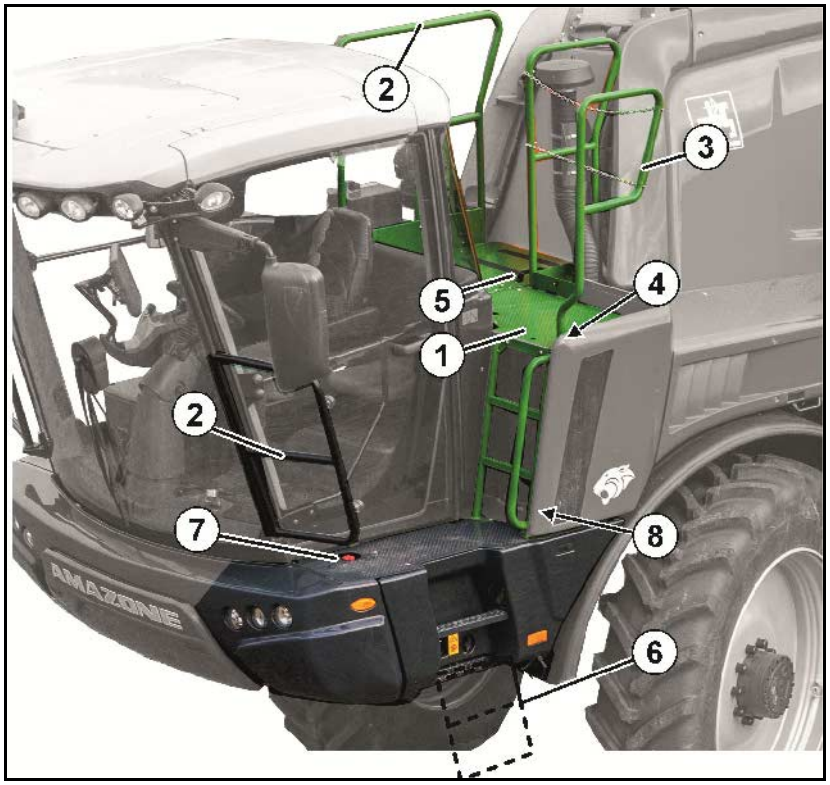

(1) Operation platform

(2) Railing to protect against falling

(3) Pivotable railing to protect against falling

The pivotable railing collides with the >36 metre boom.

→ In doing so, the railing is pivoted outwards only for the purpose of accessing the operation platform.

(4) Locking mechanism of the pivotable railing

The maintenance flap (1) on the operation platform, to be opened using the square spanner (2).

The square spanner is located in the storage box in the drivers cabin.

(5) Maintenance flap

(6) Hydraulically slewable ladder with switch in the dash panel

(7) Refilling opening for the hand wash tank

(8) Refilling opening for the windscreen washer water

(9) Work platform for accessing the drivers cabin

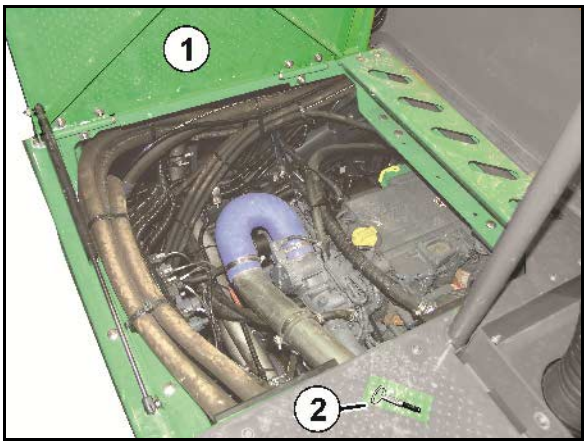

5.18 Drawbar for trailers

The automatic drawbar is used to pull braked trailers

- with a permissible total weight of 16000 kg and pneumatic brake.
- with a permissible total weight of 8000 kg and overrun brake.
- without drawbar load.
- with towing eye 40 DIN 74054.

(1) Drawbar

(2) Connection for lighting of the trailer

(3) Connection for brake of the trailer

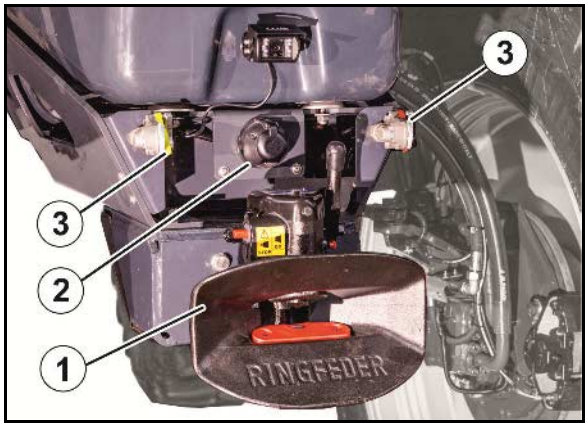

To unlock the drawbar, pull the rotary knob (1) and turn until it engages in the upper groove (2). Then raise the lever (3) until the pin disengages.

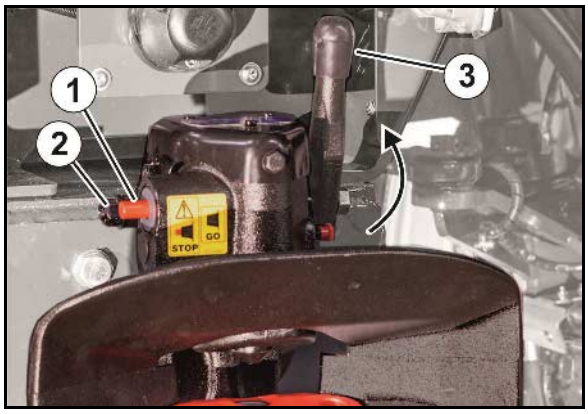

The drawbar of the trailer must be long enough to prevent collisions with the boom when driving in curves.

Braking of the trailer is achieved by pressing the foot brake pedal as well as by actuating the driving lever.

WARNING

Risk of crushing, cutting, being caught or drawn in, or impact through the accidentally rolling machine, if the service brake is released.

- Always couple the hose coupling on the brake line (yellow) first and then the hose coupling on the supply line (red).
- The service brake on the machine is immediately released from the brake setting if the red hose coupling is coupled.
- Always uncouple the supply line hose coupling (red) first, and then the brake line hose coupling (yellow).
- The service brake of the machine only moves into the brake position when the red hose coupling has been uncoupled.
- Halten Sie diese Reihenfolge unbedingt ein, da sonst die Betriebs-Bremsanlage löst und sich die ungebremste Maschine in Bewegung setzen kann.

WARNING

Risk of crushing from unintentional starting and rolling of the machine and trailer when coupling or uncoupling!

Secure the machine and trailer against unintentional start-up and rolling before entering the danger area between the machine and trailer.

WARNING

Risk of crushing when coupling the machine and standing between the machine and the trailer!

Instruct people to leave the danger area between the machine and the trailer before you approach the trailer.

Coupling the trailer via the automatic drawbar is a one-man operation.

Helpers as guides are not necessary.

5.18.1 Coupling the trailer

1. Unlock the drawbar.
2. Instruct people to leave the danger area between the machine and the trailer before you approach the trailer.
3. Drive the machine backwards to the trailer so that the connecting device couples automatically.
4. Secure the machine against unintentional start-up and rolling.
5. Couple the supply lines to the trailer.
   - 5.1 Fasten the brake line coupling head (yellow) as directed in the machine coupling with the yellow marking.
   - 5.2 Fasten the supply line coupling head (red) as directed in the machine coupling with the red marking.
   - 5.3 Plug-in the connector of the trailer lighting to the socket of the machine.
6. Move the trailer in the transport position.

5.18.2 Uncoupling the trailer

1. Place the trailer on a level parking surface on solid ground.
2. Secure the machine against unintentional start-up and rolling.
3. Move the trailer in the parking position.
4. Disconnect the supply lines.
   - 4.1 Release the supply line coupling head (red).
   - 4.2 Release the brake line coupling head (yellow).
   - 4.3 Pull out the connector of the trailer lighting.
5. Decouple the connecting equipment.

6 Construction and function of the field sprayer

6.1 Functionality of the field sprayer

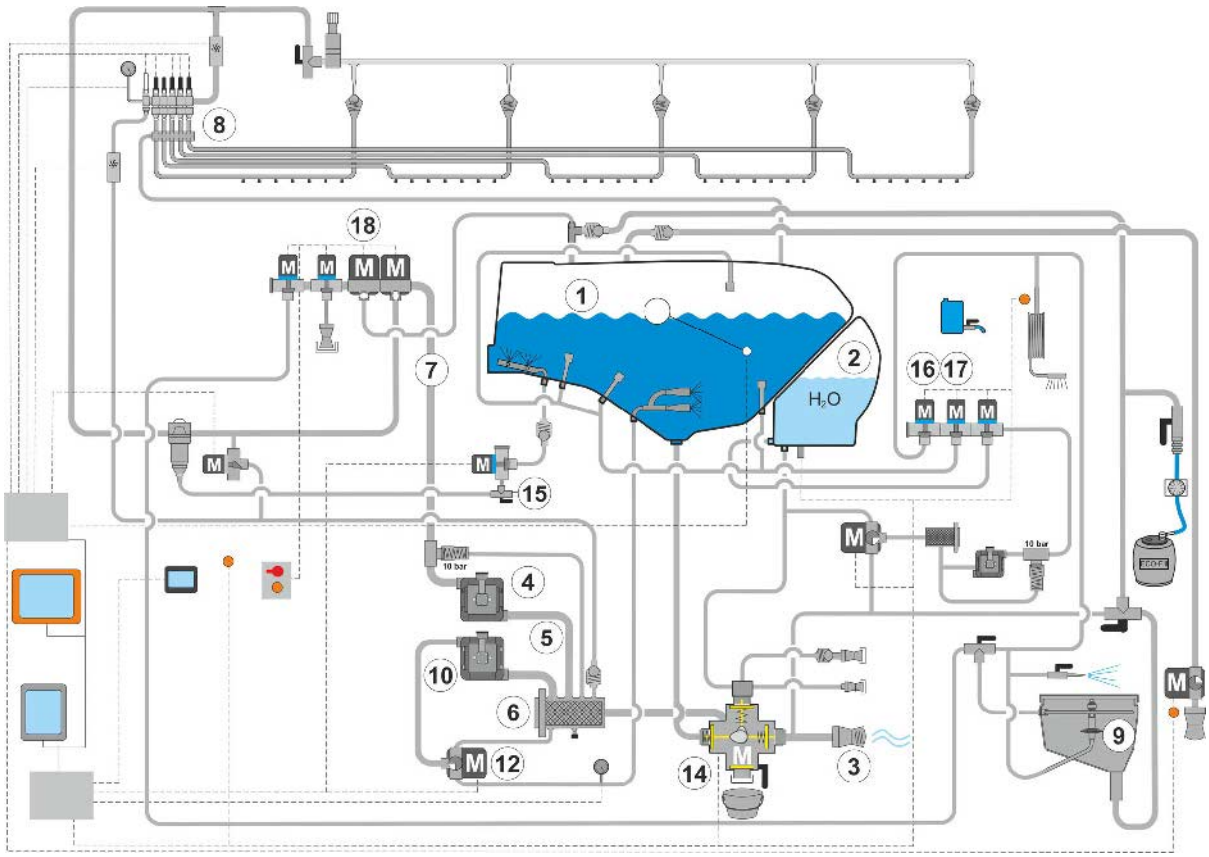

The spraying pump (4) sucks in via the suction chest (14), suction line (5) and suction filter (6).

- the spray liquid from the spray liquid tank (1).
- Flushing water from the flushing water tank (2).

→ The flushing water serves to clean the spray system.

- fresh water via the external suction port (3).

The liquid that has been drawn in is fed via the pressure hose (7) to the pressure equipment switch tap (13), and from there is fed

- via the self cleaning pressure filter to the part width section valves (8). The part width section valves then send the liquid to separate spray lines.
  The stirring level can be increased when stirring spray liquid by using the additional agitator setting tap (15) on the pressure filter.
- to the injector and the induction bowl (9).
  To prepare the spray liquid, pour the relevant quantity of agent required to fill the spray liquid tank into the induction bowl and evacuate into the spray liquid tank.
- directly into the spray liquid tank (18).
- to the internal (17) or external cleaning switch tap (16).

The agitator pump (10) supplies the main agitator (11) in the spray liquid tank.
The automatic filling level dependent regulation (12) of the main agitator ensures for a homogeneous spray liquid in the spray liquid tank

6.2 Overview control terminal

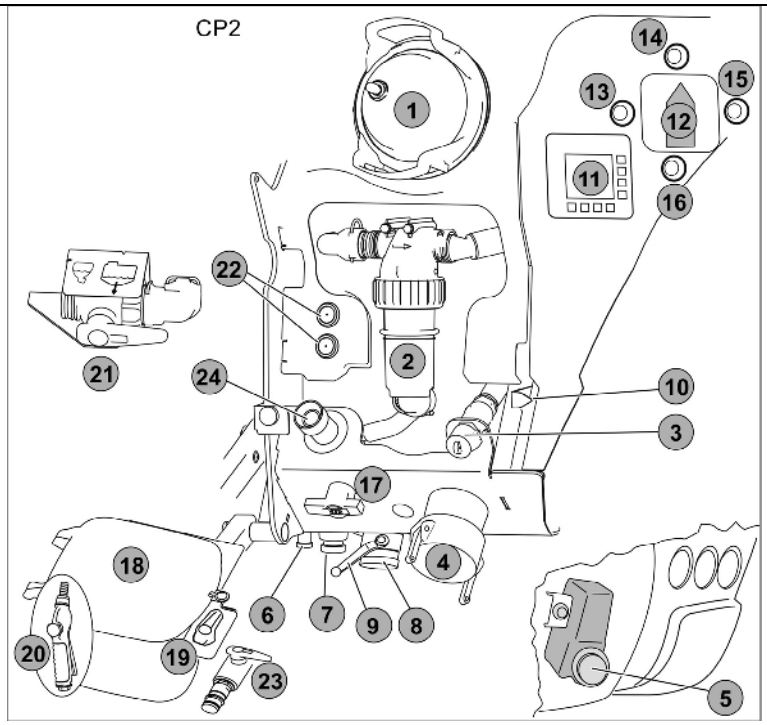

(1) Suction filter

(2) Pressure filter

(3) Filling connection (pressure) for the flushing water tank

(4) Suction valve chest drain tap

(5) Switch on injection button

(6) Pump on / off button

(7) External cleaning button

(8) Empty spray liquid tank button

(9)Induction bowl

(10) Spray pistol for flushing the induction bowl

(11) Button to lift / lower the induction bowl

(12) Ecofill flushing pedestal

DA Function selection switch

CP2 Filling terminal

SA Display of the suction valve chest position

RW Setting tap for additional agitator / drain residual quantity

ES Suction filter / spray liquid outlet

GA Switch tap for evacuating the induction bowl / Ecofill

EB Switch tap for spray liquid / water ring line

IJ Switch tap for evacuating the induction bowl / increasing the suction capacity injector

SK Filling connection (suction) for the spray liquid tank (under the cab)

ED Pressure filter outlet

EP Quick emptying via pump

DF Pressure filling / pressure relief button

DK Filling connection (pressure) for spray liquid tank

6.3 Explanation for the valve chest

- **Function selection switch (DA)**

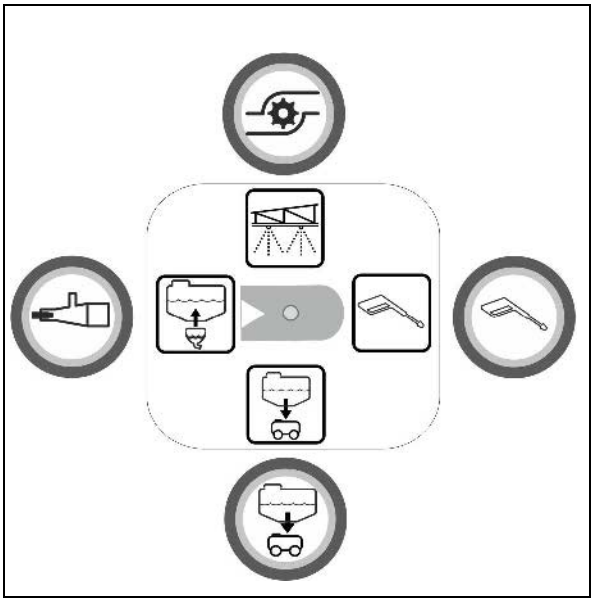

- Spraying function

  With pump on / off button

- Flushing function

  With injector on / off button

- External cleaning function

  With external wash-down device on / off button

- Empty spray liquid tank function

  With emptying on / off button

- **Filling terminal / suction tap control (CP2)**

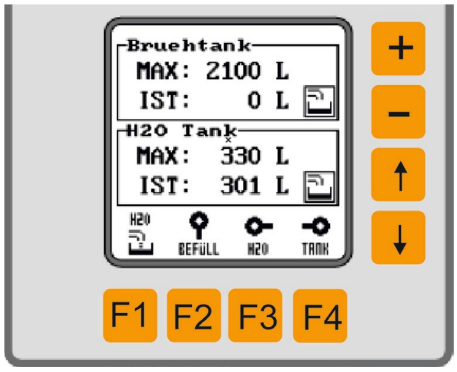

- **Showing position of suction tap (SA**

  - Sucking via suction hose
  - Sucking from spray tank
  - Sucking from flushing water tank

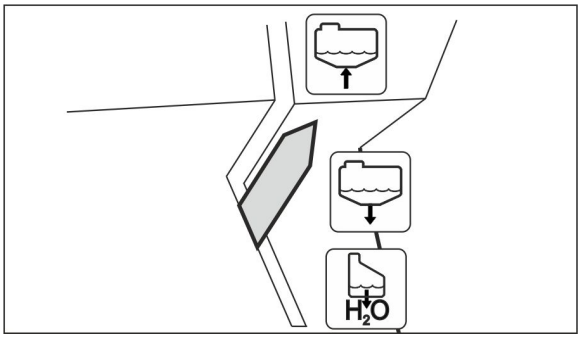

- **Additional agitator setting tap (RW)**
  - o Release residue
  - o Agitator

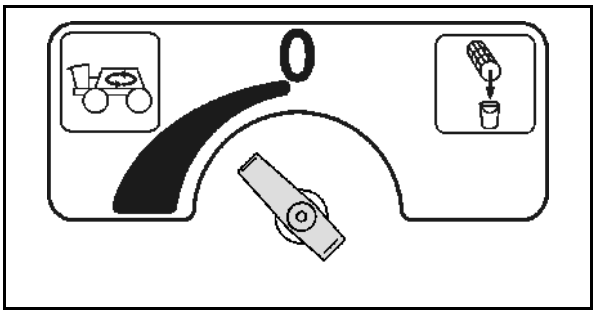

- **Drain tap suction tap (ES)**

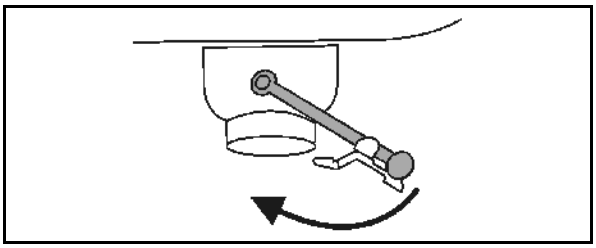

- **Evacuate switch tap for induction bowl / Ecofill (GA)**
  - o **0** Zero setting
  - o Evacuate induction bowl
  - o Ecofill filling connection for the spray liquid tank

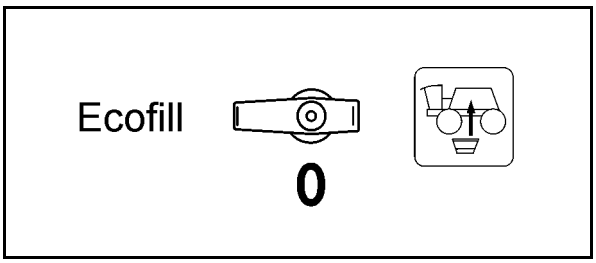

- **Ring line switch tap – spray liquid/water (EB)**
  - o **0** Zero setting
  - o Water ring line
  - o Spray liquid ring line

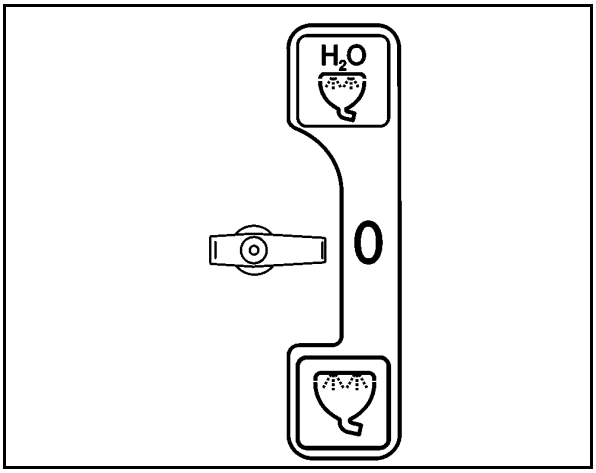

- **Switch tap injector (IJ)**
  - o Suction from induction bowl
  - o Increasing the suction capacity

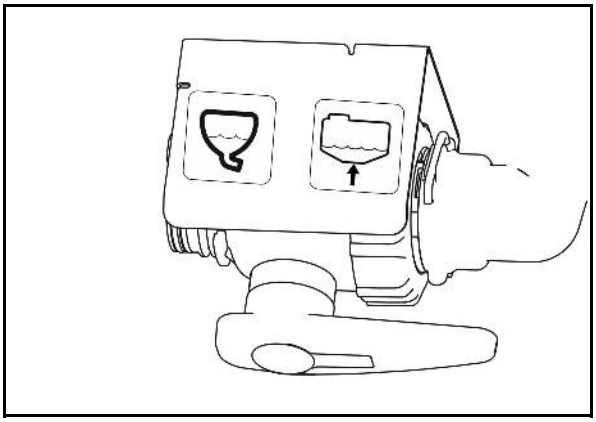

All stop taps are

- open when lever position is in direction of flow
- closed when lever position is transverse to direction of flow

6.4 Agitators

The field sprayer has a main agitator and an additional agitator. Both agitators are designed as hydraulic agitators. The additional agitator is also combined with pressure filter rinsing for the self cleaning pressure filter.

The main agitator has its own agitator pump. The additional agitator is supplied by the operation pump.

When the agitators are switched on, they mix the spray liquid in the spray liquid tank, thereby providing a homogeneous spray liquid.

- The main agitator is controlled automatically depending on the filling level of the spray liquid tank.
- The additional agitator must be set on the setting tap (1).

  The additional agitator is switched off when in setting tap position 0.The fastest stirring performance is available in position (2).

Safety device for drainage function on the pressure filter (3).

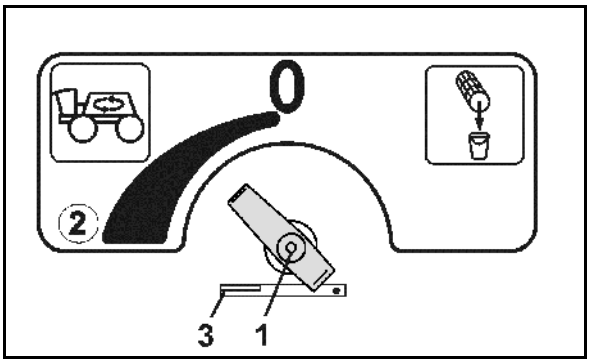

6.5 Suction hose for filling the spray liquid tank / flushing water tank

(option)

Suction hose 3“ (2 x 4 m) in parking position

- Left and right on the mudguard
- Attached on the mount with tensioning belts

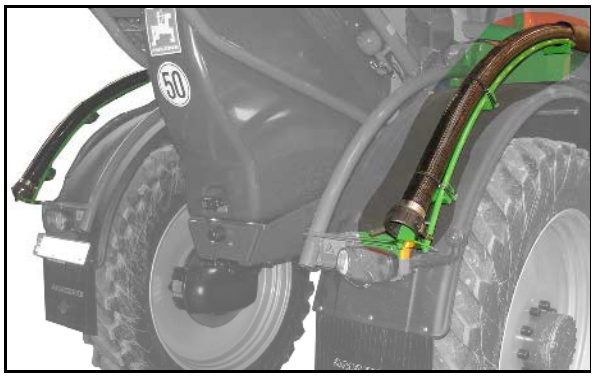

Suction filter

- With non-return valve to filter the intake water.
- With hand lever to let the residual water flow out of the hose.

Carry the suction filter in the storage compartment under the cab.

Before filling, connect the two suction hoses and the suction filter using the Camlock coupling and couple onto the suction connection.

6.6 Filling connection for pressure filling of the spray liquid tank

(optional)

- Filling with free flow path and swivel spout.
- Return flow safe direct filling.

(optional)

(1) Filling connection with automatic filling stop when the target fill level is reached or filling stop using the button.

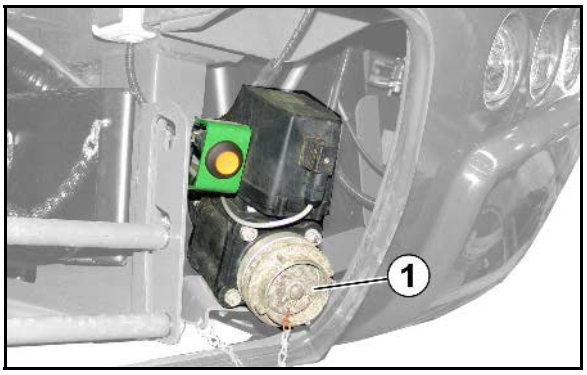

6.7 Filter equipment

- Use all the filters provided with the filter equipment. Clean the filters regularly (refer to the "Cleaning" section, page 188). Fault-free field sprayer operation can only be achieved by correct filtering of the spray liquid. Correct filtering has a significant effect on the success of the crop protection measures.
- Pay attention to the permissible combinations of filters and mesh sizes. The mesh sizes for the self cleaning pressure filter and the nozzle filters must always be smaller than the nozzle opening of the nozzles in question.
- Ensure that the use of pressure filter inserts with 80 or 100 mesh / inch for some crop protection agents can filter out active agents. In individual cases, enquire with crop protection agent manufacturers.

Filling sieve

The filling sieve (/1) prevents the spray liquid from becoming contaminated while filling the spray liquid tank via the filling dome.

Mesh size: 1.00 mm

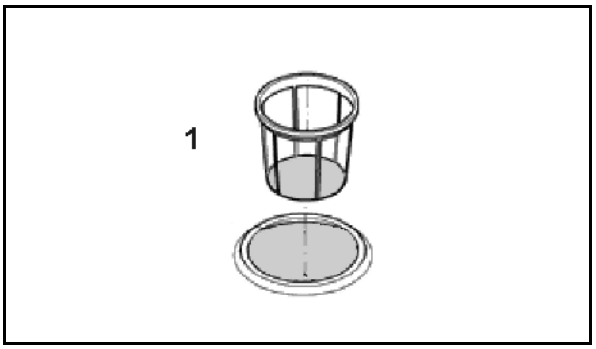

Suction filter

The suction filter filters

- the spray liquid during the spraying operation.
- the water when filling the spray liquid tank via the suction hose.

Mesh size: 0.60 mm

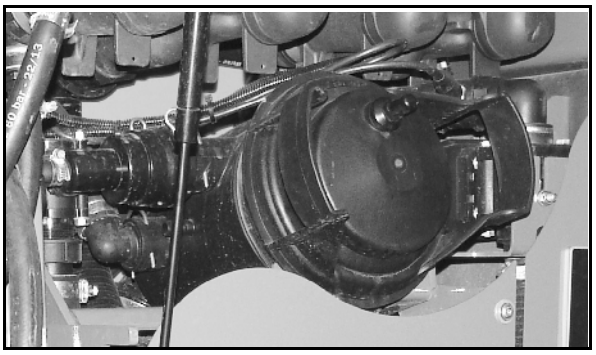

Self-cleaing pressure filter

The self cleaning pressure filter

- prevents the nozzle filter upstream of the spraying nozzle from becoming blocked.
- has a greater mesh count/inch than the suction filter.

With the additional agitator switched on, the inside surface of the pressure filter insert is constantly flushed through, and particles of spraying agent which have not dissolved as well as dirt are conveyed back into the spray liquid tank.

Overview of the pressure filter inserts

- 50 mesh/inch (standard), blue
  for nozzle size '03' and larger
  Filter area: 216 mm²
  Mesh size: 0.35 mm

- 80 mesh/inch, yellow
  for nozzle size '02'
  Filter area: 216 mm²
  Mesh size: 0.20 mm

- 100 mesh/inch, green
  for nozzle size '015' and smaller
  Filter area: 216 mm²
  Mesh size: 0.15 mm

Nozzle filters

The nozzle filters (1) prevent the spraying nozzle from becoming blocked.

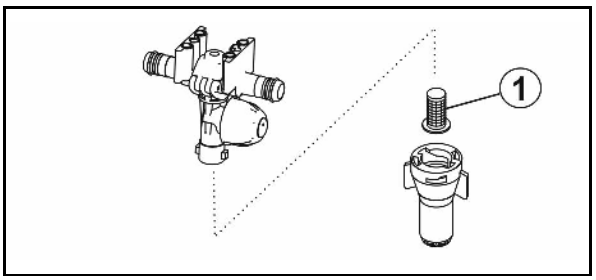

Overview of the nozzle filters

- 24 mesh/inch,
  for nozzle size '06' and larger
  Filter area: 5.00 mm²
  Mesh size: 0.50 mm

- 50 mesh/inch (standard),
  for nozzle size '02' to '05'
  Filter area: 5.07 mm²
  Mesh size: 0.35 mm

- 100 mesh/inch,
  for nozzle size '015' and smaller
  Filter area: 5.07 mm²
  Mesh size: 0.15 mm

Bottom sieve in the induction bowl

The bottom sieve (1) in the induction bowl prevents lumps and foreign bodies from being drawn in.

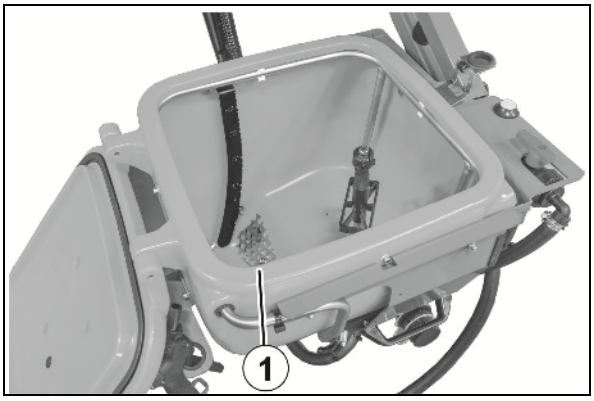

6.8 Flushing water tank

Clear water is also fed into the flushing water tank. This water is used to

- thin the residue in the spray liquid tank at the end of spraying operation.
- clean (flush) the whole field sprayer in the field.
- clean the suction chest and the spray lines when the tank is full.

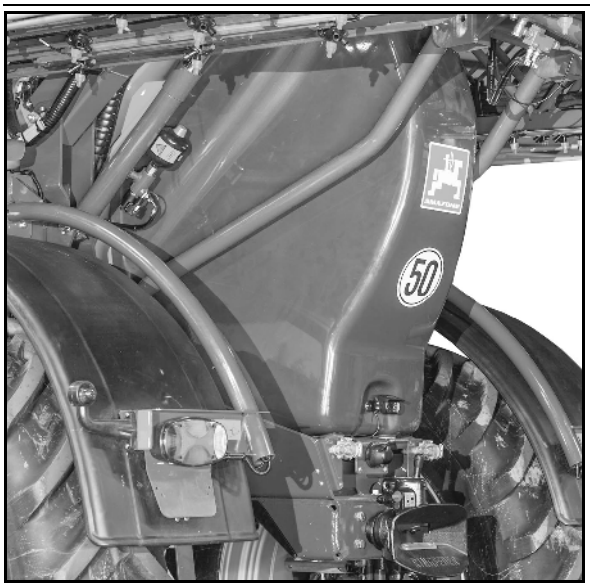

Only fill the flushing water tank with clear fresh water.

Filling via the filling connection

1. Connect filling hose.
2. Fill the flushing water tank via the water network.

→ observe fill level display.

3. Fit the stopper cap on the filling connection.

6.9 Induction bowl with filling connection for Ecofill and canister flushing

(1) Swivel-out induction bowl for receiving, dissolving and drawing in crop protection agents and urea.

(2) Hinged lid.

(3) Handle for swivelling the induction bowl.

(4) Parallelogram arm for swivelling the induction bowl from transport to filling position.

(5) Switch tap for ring line / canister flushing.

(6) Locking device for the transport position.

(7) Button to evacuate the induction bowl

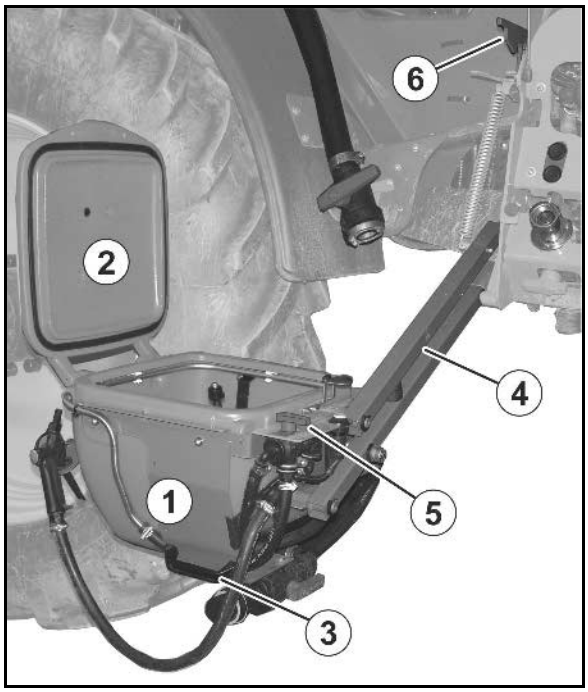

Transport safety catch to hold the folded up induction bowl in transport position and prevent it from swivelling down.

- To swivel the induction bowl in filling position:

1. Take hold of the handle on the induction bowl.
2. Unlock safety catch.
3. Swivel the induction bowl down.

(1) The bottom sieve in the induction bowl prevents lumps and foreign objects from being drawn in.

(2) Rotating canister flushing nozzle for washing out canisters or other containers.

(3) Pressure plate.

(4) Ring line to dissolve and induct crop protection agent and urea.

(5) Scale

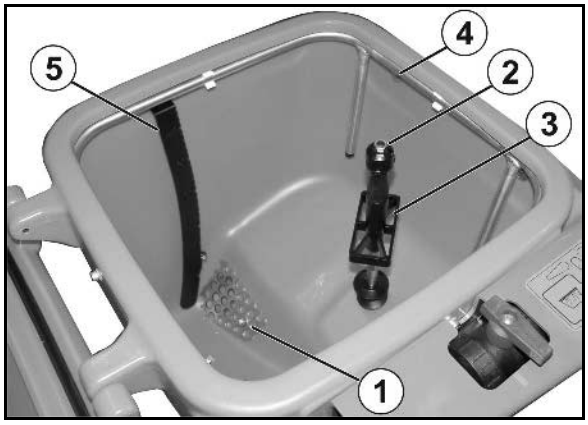

Water escapes from the canister flushing nozzle if

- the pressure plate is pressed downwards.
- the closed folding cover is pressed downwards.

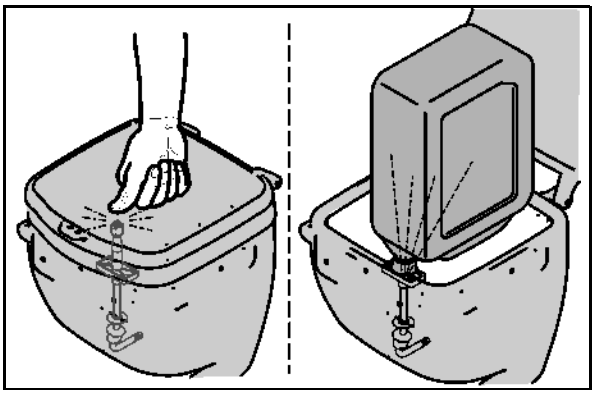

Spray gun for flushing the induction bowl

The spray gun is used for flushing the induction bowl with flushing water during or after the flushing process.

> Secure the spray gun against unintentional spraying using the locking mechanism (Fig. 87/1)
>
> - before each pause in spraying.
> - before depositing the spray gun in its holder after cleaning work is complete.

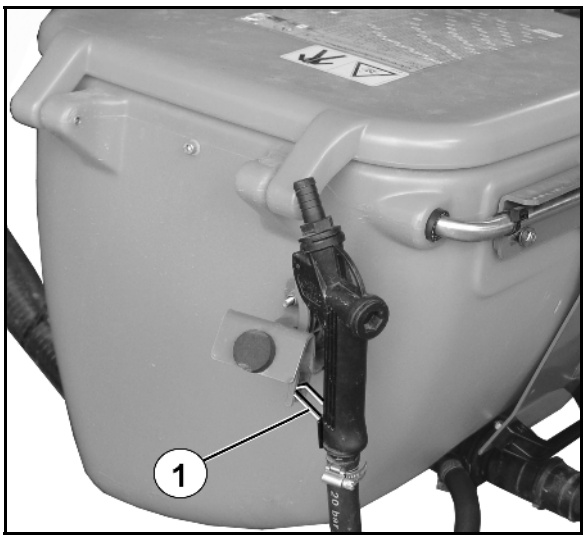

Hydraulically operated induction bowl

↑ Button to lift the induction bowl.

↓ Button to lower the induction bowl.

Always lift the induction bowl to the end position so that the permissible transport width is not exceeded.

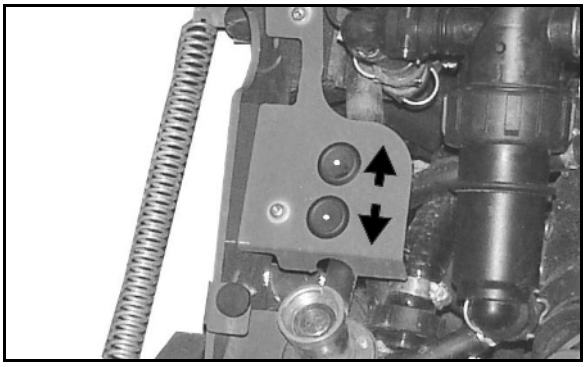

Ecofill filling connection (option)

Ecofill connection for evacuating spray agent from Ecofill tanks.

(1) Ecofill filling connection (Option).

(2) Flushing port for Ecofill counter.

(3) Ecofill switch tap

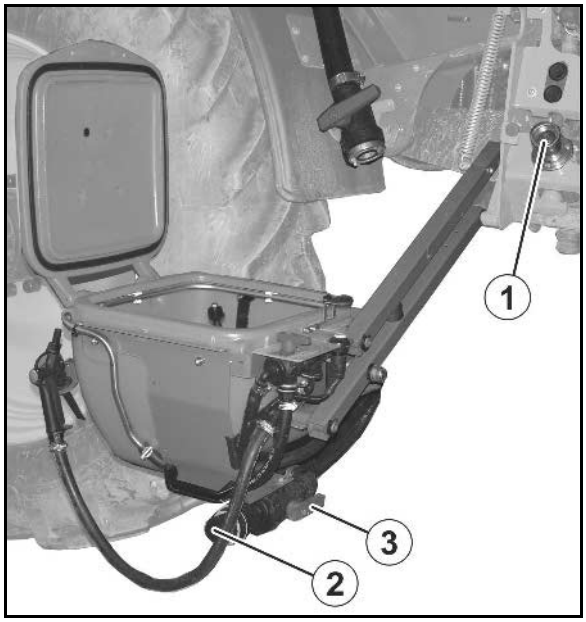

6.10 Hand wash tank

Hand wash tank (20 l) for clear freshwater for cleaning your hands and spray nozzles.

(1) Hand wash tank behind the cover

(2) Filling connection

(3) Stop tap.

(4) Discharge

(5) Soap dispenser

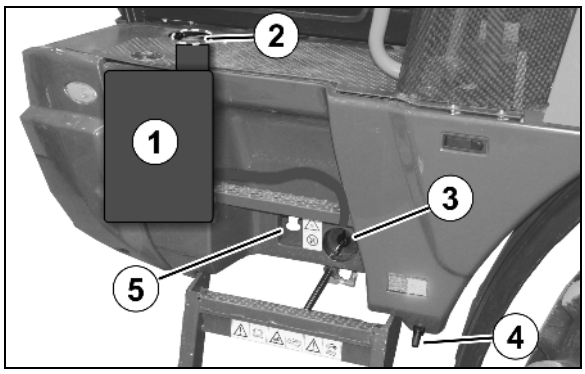

WARNING

Risk of being poisoned by unclean water in the fresh water tank!

Never use the water from the hand wash tank as drinking water. The materials used to construct the fresh water tank are not food-safe.

6.11 Pumps

Under the side cladding on the left: – under the side cladding on the right:

- Flushing water pump

Under the right-side panel:

- Flushing water pump

The spraying pumps are switched on and off via the AmaDrive or via the buttons on the control terminal.

The pump speed can be adjusted on the AmaDrive (operating speed 400 to 540 rpm).

6.12 Sprayer boom

WARNING

Risk of injury for people due to impact with the sprayer boom when

- **the boom sections swivel to the sides when folding**
- **tilting, lifting or lowering**

Instruct people to leave the danger area of the machine before you operate the sprayer boom.

The proper condition of the sprayer boom and how it is suspended have considerable influence on the distribution accuracy of the spray liquid. With the spraying height of the sprayer boom to the crop set correctly, a complete overlap is achieved. Nozzles are attached to the boom at intervals of 50 cm (alternatively 25 cm)

The sprayer boom is operated using the ISOBUS control terminal.

Depending on the machine equipment, the following functions can be performed via the boom kinematics function group:

- Folding and unfolding the sprayer boom,
- Hydraulic height adjustment,
- Hydraulic tilt adjustment,
- One-sided sprayer boom folding,
- One-sided, independent angling up and down of the sprayer boom / boom sections,
- Automatic boom ride.

DANGER

Always maintain an adequate distance from overhead cables when folding and unfolding the sprayer boom! Contact with overhead cables may lead to fatal injuries.

WARNING

Risk of crushing the entire body and impact due to personnel becoming trapped by laterally-swivelling machine parts.

These dangers can cause extremely serious and potentially fatal injuries.

Maintain an adequate safety distance from moving machine parts while the tractor engine is running.

Ensure that all personnel maintain an adequate safety distance from moving machine parts.

Instruct personnel to leave the swivel range of any moving machine parts before swivelling the parts.

WARNING

Danger for third parties from crushing, being drawn in and/or caught by the moving parts of the boom or impact if they stand in the swivel range of the boom while it is folding out or in.

- Instruct personnel to leave the swivel range of the boom before you fold the boom out or in.
- Release the control for folding the boom out and in immediately if someone enters the swivel range.

6.12.1 Super-L boom

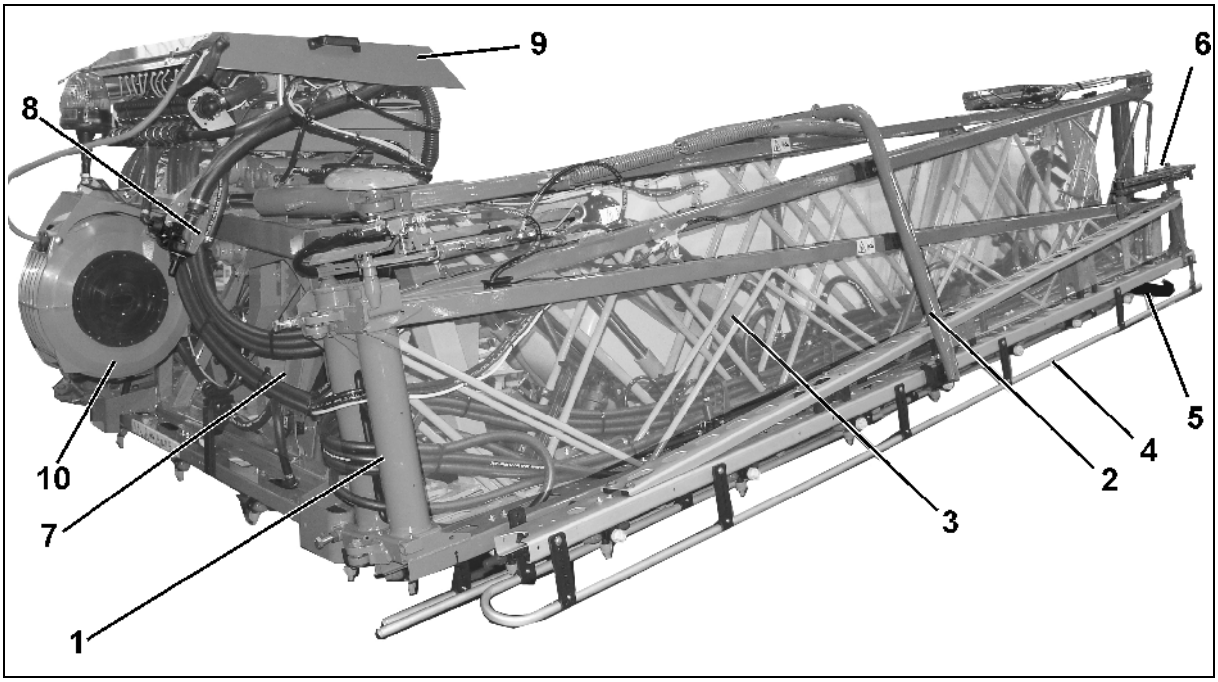

(1) Sprayer boom with spray lines

(2) Transport safety bow
The transport safety bows are used for securing the folded sprayer boom against accidental unfolding while in transport position.

(3) Parallelogram frame for adjusting the height of the sprayer boom

(4) Nozzle protection tube

(5) Spacer

(6) Outer boom locking, see **Seite 118**

(7) Swing compensation, see page oben

(8) Valve and switch tap for DUS system

(9) Boom equipment, see Fig. 96

(10) Outer rinsing unit

Boom equipment

(1) Pressure connection for the spraying-pressure pressure gauge

(2) Flow meter for determining the spray rate [l/ha]

(3) Return flow meter for determining the spray liquid that has been fed back into the spray liquid tank

(4) Motor valves for switching the boom part width sections on and off

(5) Bypass valve

(6) Pressure relief

(7) Pressure sensor

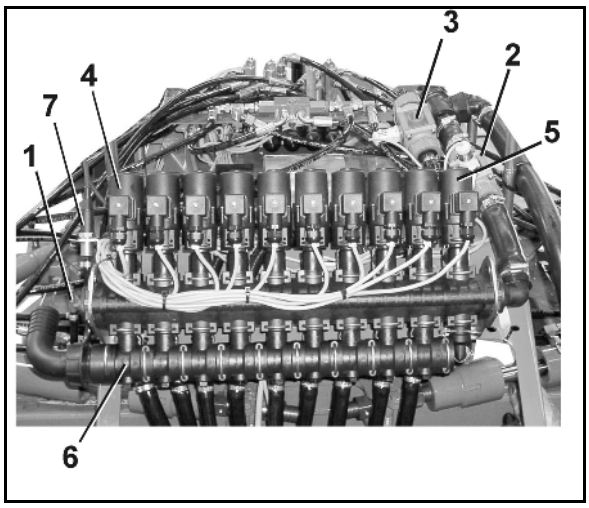

Locking and unlocking the transport locking mechanism

The transport safety bow is used to lock the folded sprayer boom in transport position to prevent unintentional unfolding.

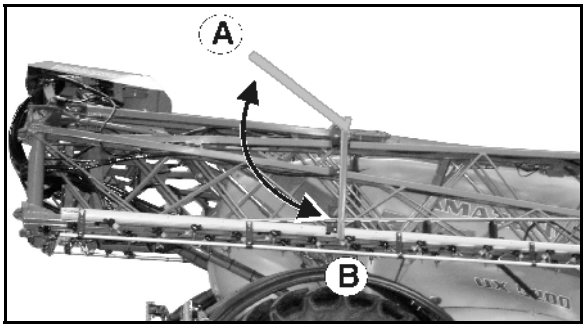

Unlocking the transport locking mechanism

Before unfolding the sprayer boom, swivel the transport safety bows upwards, thereby unlocking the sprayer boom (A).

Locking the transport locking mechanism

After folding the sprayer boom, swivel the transport safety bows downwards, thereby locking the sprayer boom (B).

Boom locking

Outer boom locking

The outer boom locking mechanisms protect the boom from damage if the outer boom sections come into contact with solid obstructions. The locking mechanism enables the outer boom section to avoid collision by moving around the articulated axle in and against the direction of travel; it is then automatically returned to its working position.

Boom section locking with hydraulic cylinder:

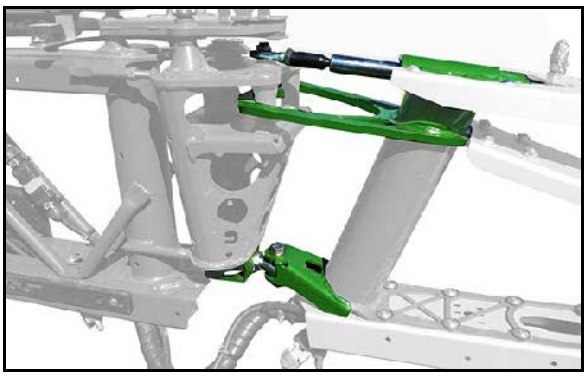

Hydraulic centre boom section locking:

Flex-folding

The centre boom section locking mechanisms protect the boom from damage when the centre boom section hits solid obstacles. The locking mechanism enables deflection opposite to the direction of travel when driving forward.

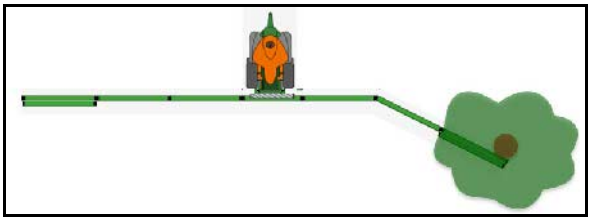

To return into position, the sprayer boom must be completely unfolded again.

Before moving off again, check the boom for damage.

Spacer

The spacer prevents collisions of the boom with the ground.

When using certain nozzles, the spacers are within the spray cone.

In this case, attach the spacers horizontally on the carrier.

Use thumb bolts.

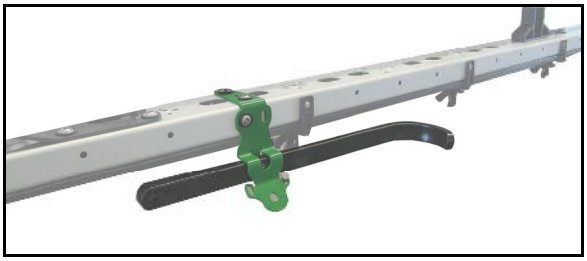

6.12.2 Sprayer boom with Flex-folding

The sprayer boom is operated using the control terminal or multi-function stick.

Folding and unfolding the sprayer boom

DANGER

Always maintain an adequate distance from overhead cables when folding the sprayer boom out and in. Contact with overhead cables may lead to fatal injuries.

Fold all of the sections simultaneously

Unfold boom:

1. Lift the boom out of the transport position.
2. Unfold the boom.

Folding the boom:

Fold the boom completely into transport position.

Do not fold and unfold the sprayer boom while driving

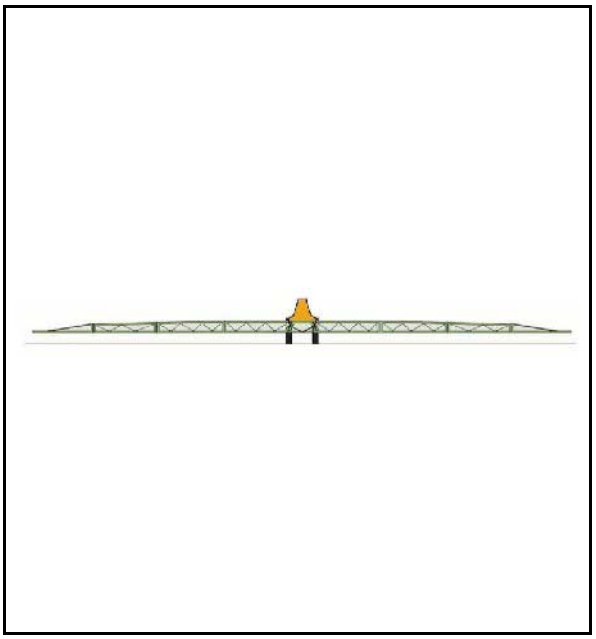

One-sided boom folding

- The outer sections can be folded while driving
- Other sections must be folded when standing still
- Fold the sections consecutively from the outside to the inside.
- Switch off the part-width sections accordingly
- Maximum forward speed 6 km/h

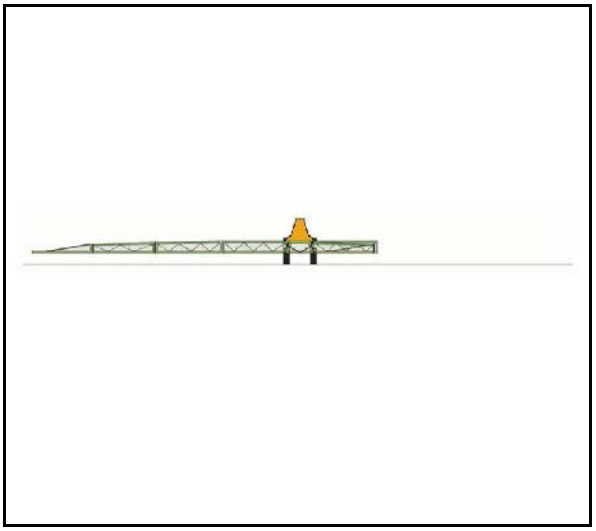

It is forbidden to work with the boom folded into transport position on one side.

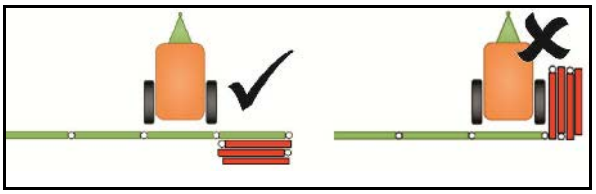

Working width reduction on both sides

Reduce the working width using part-width section control in the Profile menu.

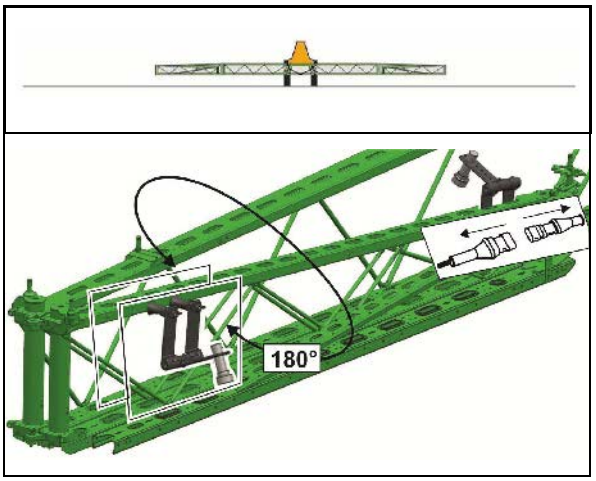

Sensors on the boom

With reduced working width, install each outer sensor rotated by 180°.

Deactivate the inner sensor (ISOBUS)

Automatic ContourControl boom ride ContourControl / DistanceControl

The automatic boom ride automatically keeps the sprayer boom parallel at the desired distance from the target surface.

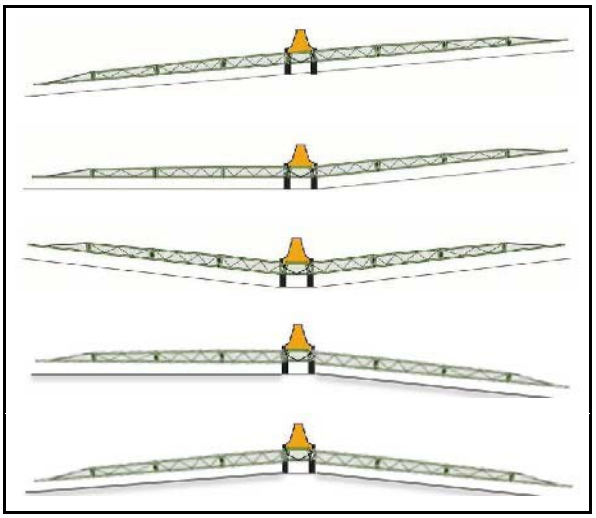

Switching the automatic boom ride on / off

Set the spraying height (distance between the nozzle and the crop) according to the spray table.

Ultrasound sensors (1) measure the distance to the ground or the crop. If there is a deviation, the system regulates the working height via the height adjustment, tilt adjustment, and angling up or down.

When switching off the sprayer boom at the headlands, the sprayer boom is automatically lifted. When switched back on again, the sprayer boom is lowered back to the calibrated height.

Setting the ultrasound sensors:

→ See figure

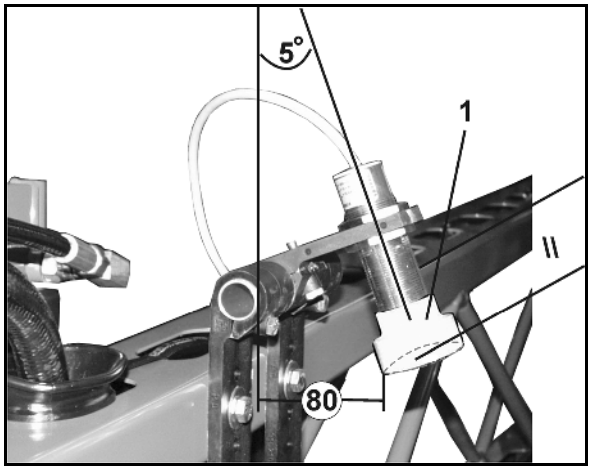

SwingStop

SwingStop option for vibration damping

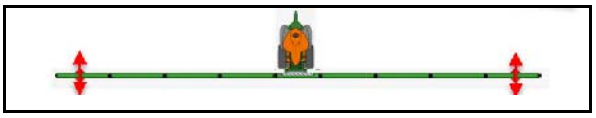

6.12.3 Reduction joint on the outer boom (optional)

Using the reduction joint, the outer element of the outer boom can be folded manually to reduce the working width.

Case 1:

Number of nozzles outer part width section	=	Number of nozzles on the foldable outer element

→ When spraying with a reduced working width, keep the outer part-width sections switched off.

Case 2:

Number of nozzles outer part width section	≠	Number of nozzles on the foldable outer element

→ Close the outer nozzles manually (triple nozzle head).

→ Perform changes on the control terminal.

- Enter the changed working width.
- Enter the changed number of nozzles on the outer part width sections.

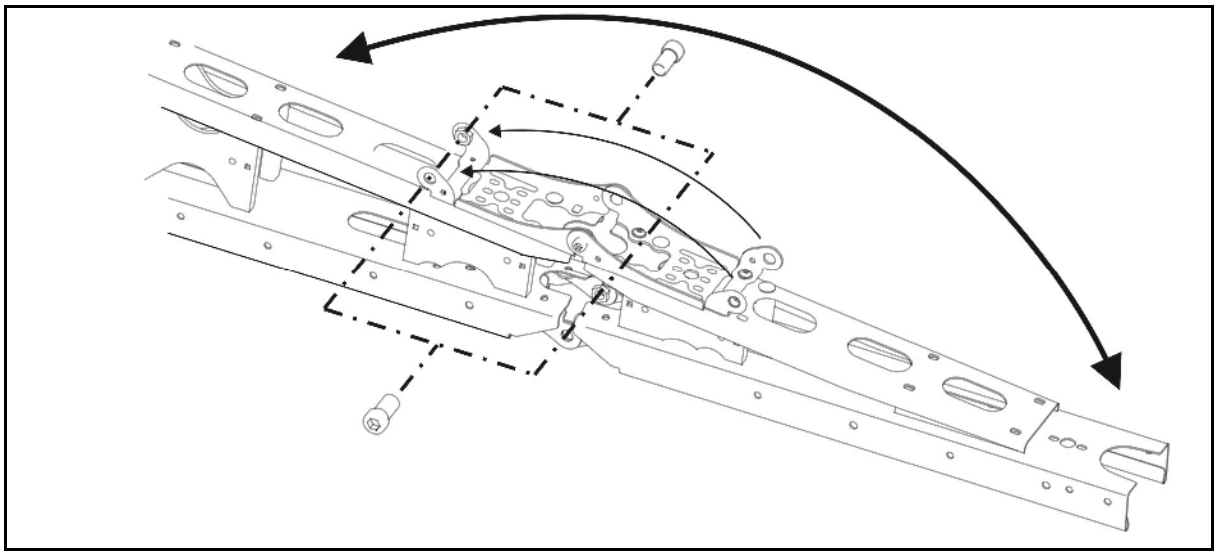

2 bolts lock the folded and unfolded outer element in its respective end positions.

CAUTION
Before road transport, unfold the outer elements again so that the transport locking mechanism is active when the boom is folded.

6.13 Spray lines

Spray lines with part-width section valves

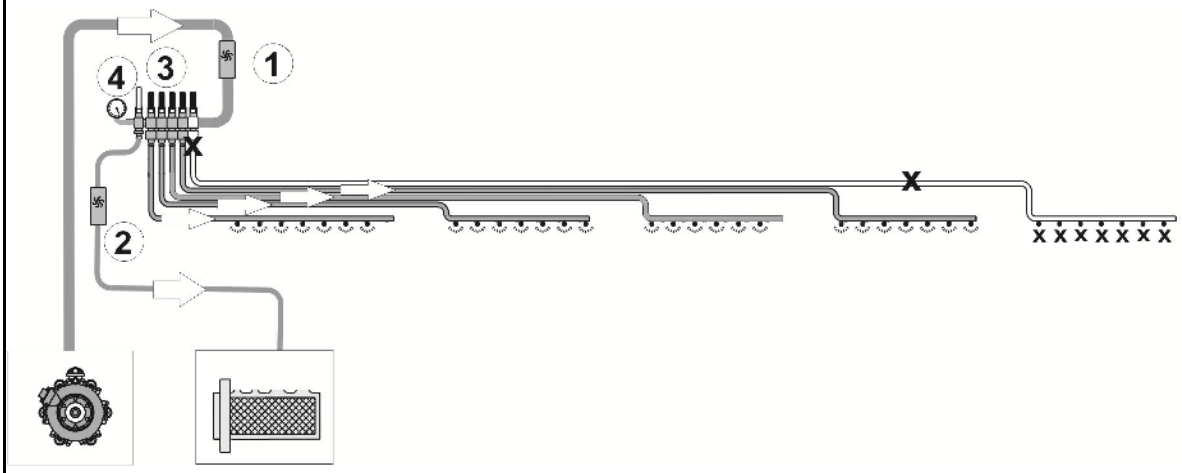

Spray lines with part-width section valves and DUS pressure circulation system

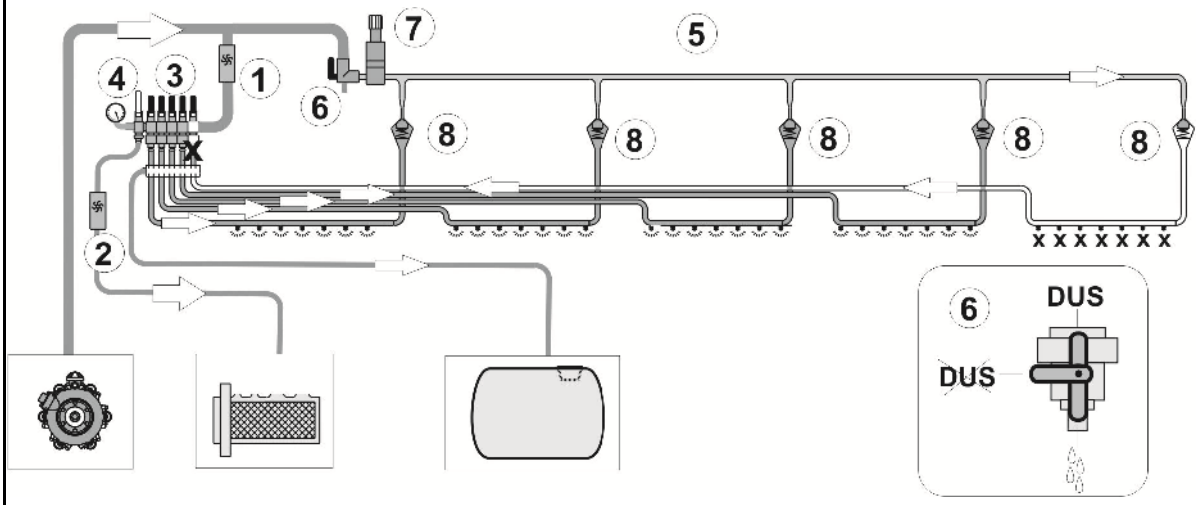

Spray lines with single nozzle control and DUS Pro pressure circulation system

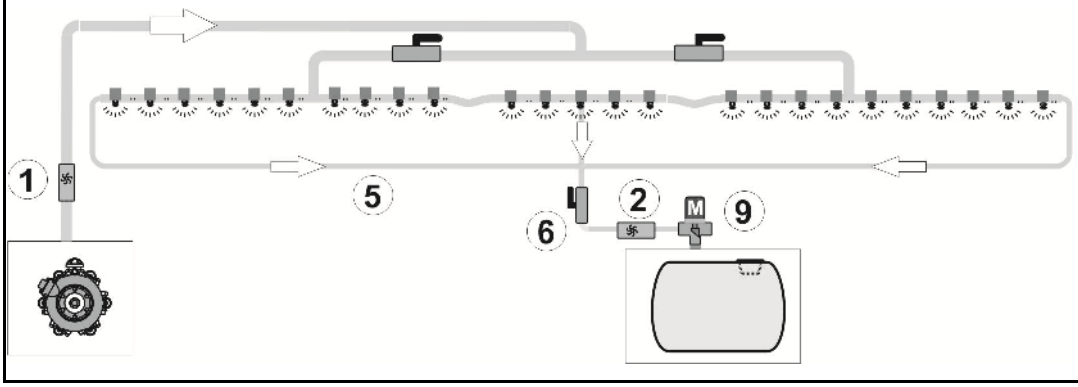

(1) Flow meter
(2) Flow meter
(3) Boom part width section valves
(4) Bypass valve for low application rates
(5) Pressure circulation line
(6) DUS stop tap
(7) Pressure control valve
(8) Check valve
(9) Pressure control valve

Pressure circulating system DUS

Part-width section valves control: When using drag hoses, the pressure circulating system should usually be switched off.

The pressure circulating system

- enables the constant circulation of liquid in the spray line. For these purposes, a suction port hose (1) is assigned to each part width section.
- enables operation using spray liquid or flushing water, as desired.
- reduces the undiluted residue for all spray lines to 2 l.

The constant circulation of liquid

- enables production of an even spray pattern right from the start, because spray liquid is available at every spraying nozzle immediately after the sprayer boom is switched on, with no delay.
- prevents damage to the spray line.

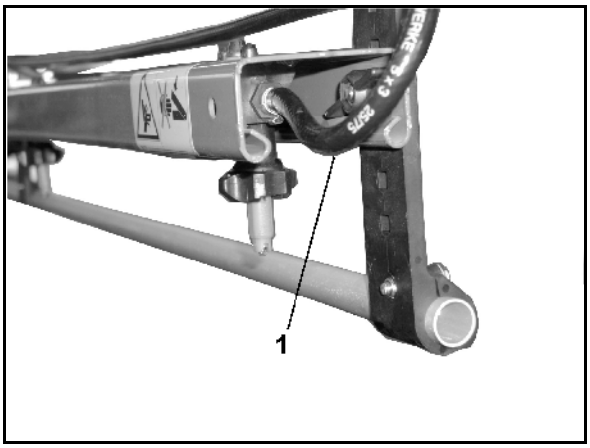

Line filter for spray lines (optional

Line filters (1) are

- fitted in the spray lines in each part width section (Teilbreitenschaltung).
- Is installed in the spray lines on the left and right (individual nozzle control)
- reduces the undiluted residue for all spray lines.

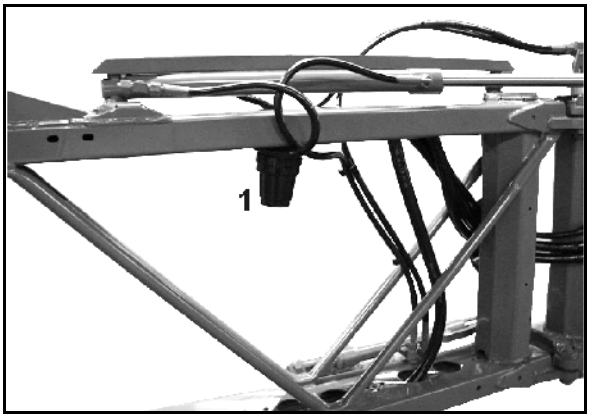

Overview of the filter inserts

- Filter insert with 50 mesh/inch (blue)
- Filter insert with 80 mesh/inch (grey)
- Filter insert with 100 mesh/inch (red)

6.14 Nozzles

(1) Nozzle body with bayonet connection

- o Spring element version with shutter
- o Spring element version, bolted

(2) Diaphragm. If the pressure in the spray line falls below approx. 0.5 bar, the spring element (3) presses the diaphragm onto the diaphragm seat (4) in the nozzle body. This ensures that when the sprayer boom is switched off, the nozzles are deactivated without subsequent dripping.

(3) Spring element.

(4) Shutter; holds the entire diaphragm valve in the nozzle body

(5) Nozzle filter; fitted as standard on machines with 50 mesh/inch, is inserted from below into the nozzle body.

(6) Rubber seal

(7) Nozzle with bayonet cap

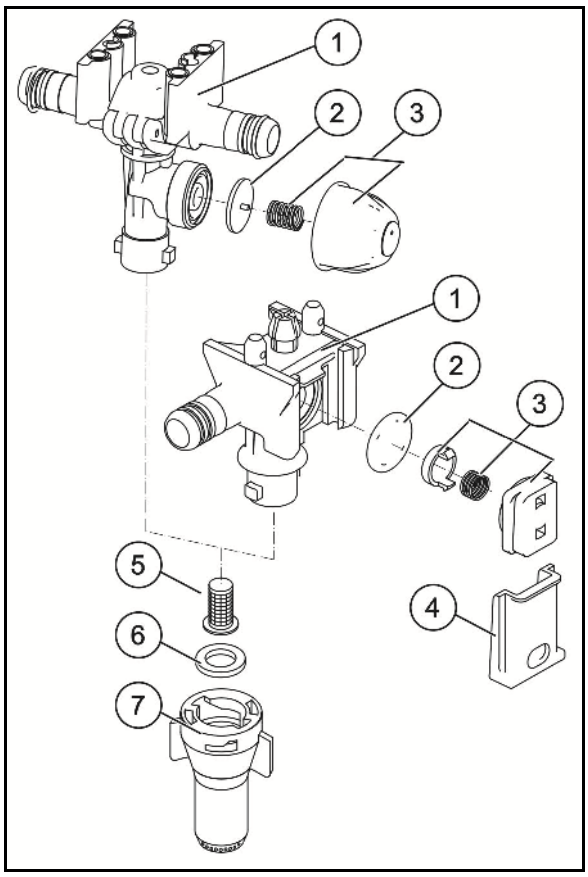

6.14.1 Multiple nozzles

It is advantageous to use multiple nozzle heads when using different nozzle types.

Turning the multiple nozzle head counterclockwise brings a different nozzle into play.

The multiple nozzle head is switched off in the intermediate positions. This provides the possibility of reducing the working width of the boom.

> Flush the spray lines before twisting the multiple nozzle head to another nozzle type.

Triple nozzles (optional)

The vertically positioned nozzle is supplied.

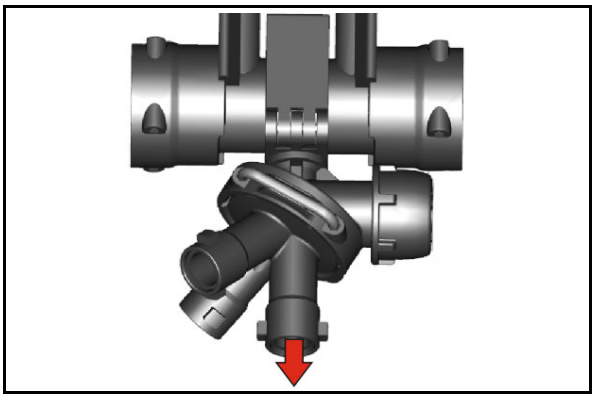

Quadruple nozzles (optional)

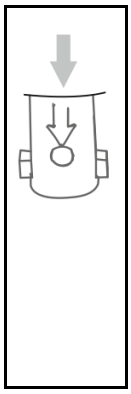

The arrow indicates the nozzles that are supplied.

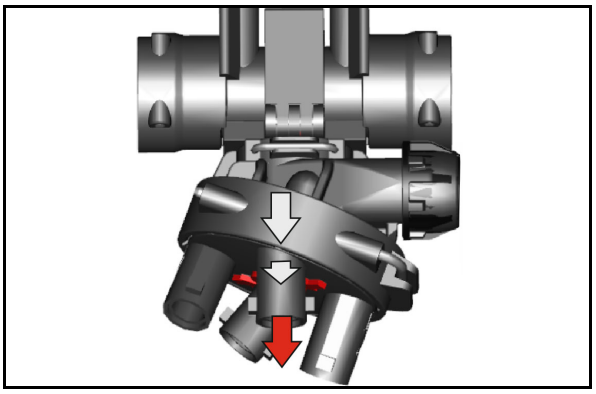

The quadruple nozzle body can be equipped with a 25-cm nozzle holder. This results in a nozzle spacing of 25 cm.

The arrow indicates the label 25 cm when the nozzle spacing is set at 25 cm.

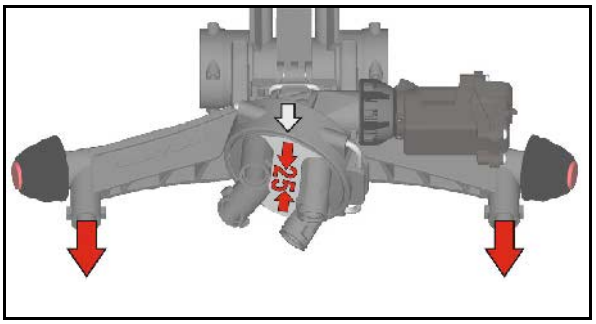

Install the 25 cm nozzle holder.

If the 25 cm nozzle holder is not used, close the supply with plugs.

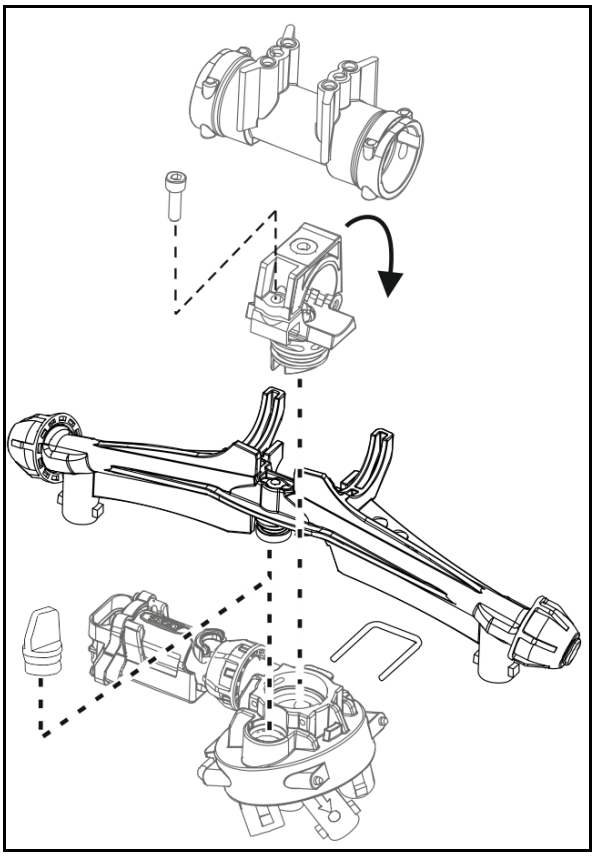

6.14.2 Edges nozzles

Boundary nozzles, electric or manual

Using boundary nozzle switching, the last nozzle can be switched off using the control terminal, and a boundary nozzle can be electrically switched on 25 cm further out (right at the edge of the field).

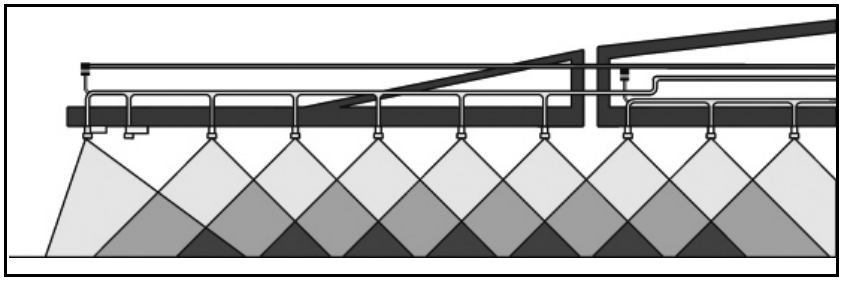

Electric end nozzle switching (optional)

Using end nozzle switching, up to three of the outer nozzles at the edge of the field close to a water source can be electrically switched off using the control terminal).

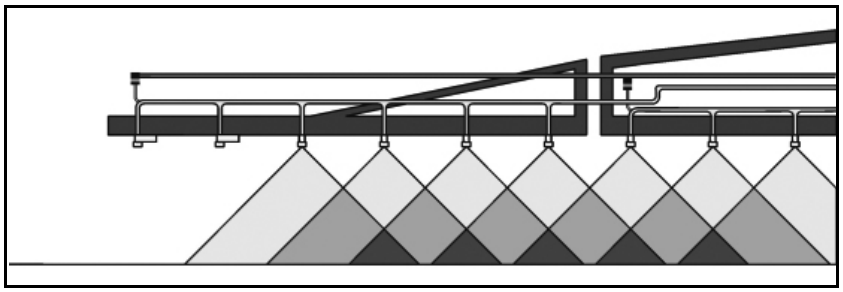

Electric additional nozzle switching (optional)

With the additional nozzle switching, another exterior nozzle is switched on using the control terminal, increasing the working width by one metre.

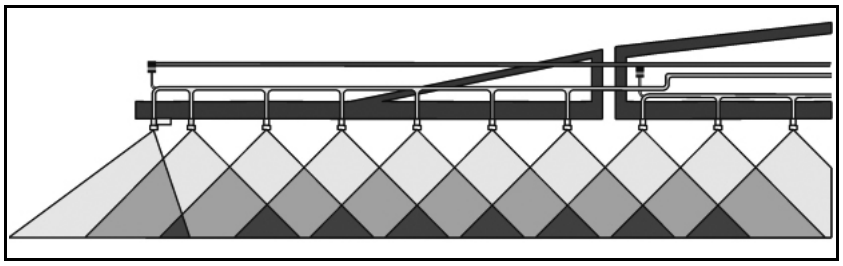

6.15 Automatic single nozzle control (optional)

50 cm part width sections can be controlled separately by the electric single nozzle control. In combination with the automatic part width section control "Section Control", overlapping can be reduced to a minimum area.

6.15.1 Single nozzle control AmaSwitch

Each nozzle can be switched on and off separately via Section Control.

(1) Nozzle body

(2) Union nut with diaphragm seal

(3) Motor valve

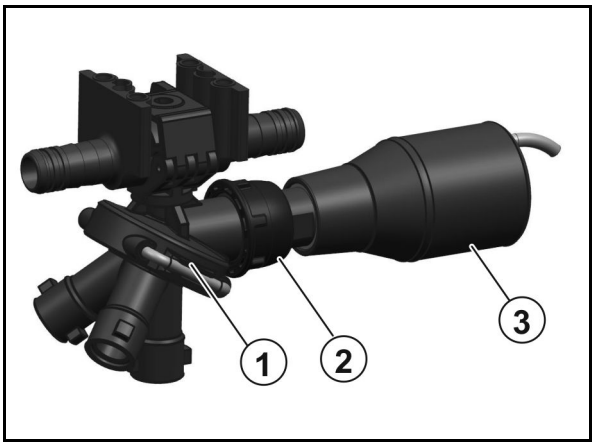

6.15.2 4-way AmaSelect single nozzle control

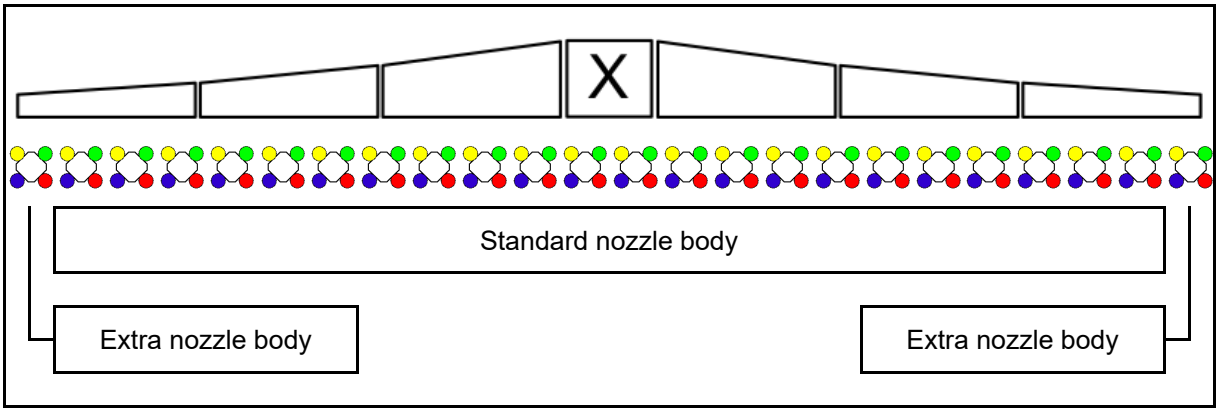

- The sprayer boom is fitted with 4-way nozzle bodies. Each of them is operated by an electric motor.
- The nozzles can be switched on or off as desired (depending on Section Control).
- Due to the 4-way nozzle bodies, several nozzles can be simultaneously active in a nozzle body.
- Alternatively, the nozzles can be manually selected.
- For boundary treatment, an extra nozzle body can be separately configured.
- LED single nozzle illumination integrated in the nozzle body.

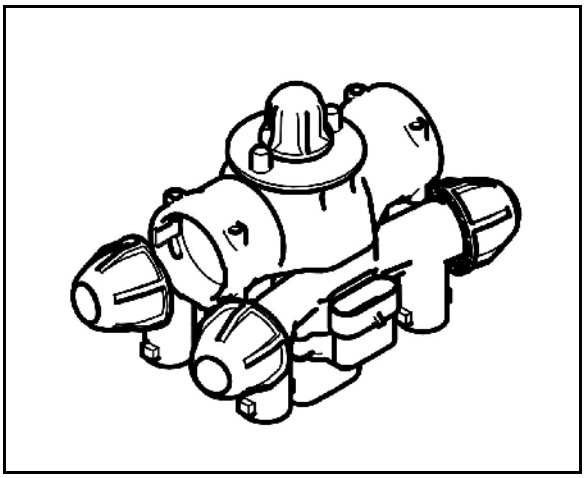

- Nozzle spacing of 25 cm is possible (optional)
  During installation, please note that the two outlets pointing to the front on the implement side must be used for installation.

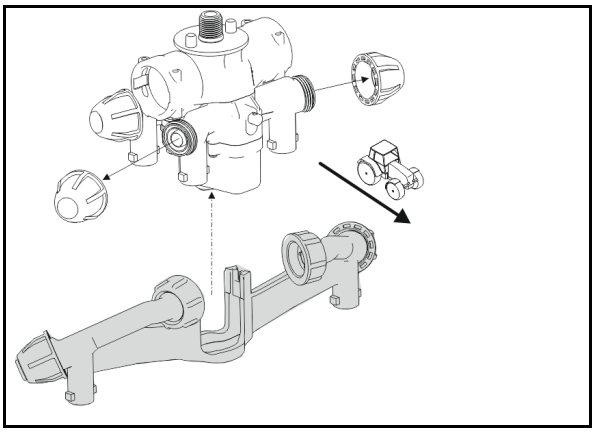

Manual nozzle selection:

The control terminal can be used to select the nozzle or the nozzle combination.

Automatic nozzle selection:

The nozzle or nozzle combination is automatically selected during spraying in accordance with the entered border conditions.

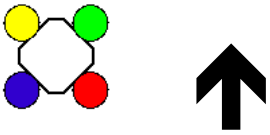

Symbol for nozzle housings - AmaSelect.

The arrow shows the direction of travel.

→ This is important for the assembly of the nozzles in the nozzle bodies!

6.16 Application rate increase with HighFlow+

- Optional application rate increase for applying liquid fertiliser.

  The maximum application rate is increased to up to max. 400 l/min.
- In doing so, the agitator pump is used to increase the application rate. It is then only partially used as an agitator drive, or not at all.

When using HighFlow, ensure sufficient agitator capacity.

- The high-performance liquid fertilisation is switched on and off via the control terminal.

The HighFlow valve chest is located on the right of the platform.

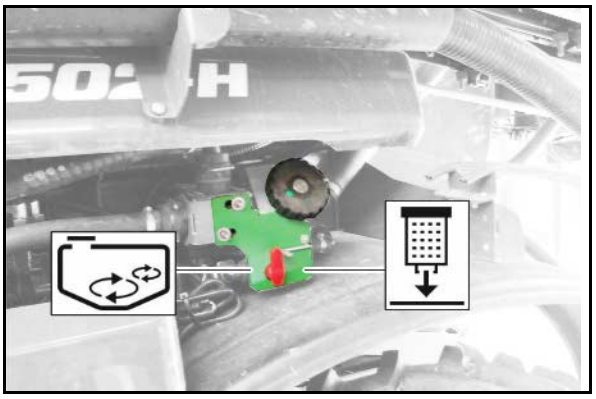

(1) Additional pressure filter

(2) Switch tap for secondary agitator / draining the residual quantity from the pressure filter

- o Agitator running at maximum
- o **0** – Agitator off
- o Drain pressure filter

Control terminal: Multi-function display

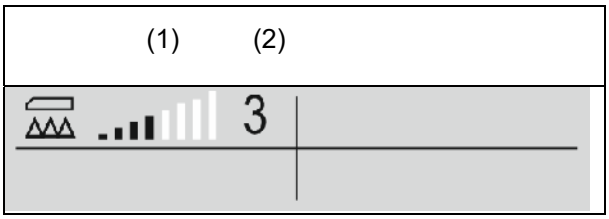

(1) The display of the rate control valve position as a bar diagram provides information as to whether the forward speed / application rate can be increased or the agitator capacity must be reduced.

→ The more bars are marked, the greater the quantity that is delivered to the boom.

(2) The digit (value 1-6) for HighFlow shows the portion that is used by the agitator pump for spraying.

6.17 Special optional equipment for liquid fertiliser

At the moment there are essentially two main types of liquid fertiliser available:

- Ammonium nitrate / urea solution (AUS) with 28 kg N per 100 kg AUS.
- An NP solution 10-34-0 with 10 kg N and 34 kg P_2O_5 per 100 kg NP solution.

If the liquid fertiliser is sprayed using flat-fan nozzles, multiply the corresponding values from the spray table for the spray rate (l/ha) by 0.88 for AUS and by 0.85 for NP solutions, as the spray rates listed (in l/ha) only apply for water.

As a rule:

Use coarse-dropped application for liquid fertiliser to avoid chemical burns to the plants. Overly large drops roll off the leaf and drops which are too small cause a magnifying glass effect, which burns the leaves. Too much fertiliser may cause burns to appear on the leaves due to the salt concentration in the fertiliser.

As a rule, do not spray more liquid fertiliser than, for example, 40 kg N (see also "Conversion table for spraying liquid fertiliser"). Always discontinue nozzle-based AUS fertilisation at development stage EC-39, because chemical burns on ears have a particularly bad effect.

6.17.1 Three-ray nozzles

(option)

The use of three-ray nozzles for applying liquid fertiliser is beneficial if the liquid fertiliser needs to be taken up more by the roots of the plant than through the leaves.

Thanks to its three openings, the dosing aperture, which is integrated into the nozzle, ensures a coarse-dropped, almost depressurised distribution of the liquid fertiliser. This prevents an undesirable spray mist and the formation of smaller drops. The coarse drops produced by the three-ray nozzle hit the plants with little force and roll off their surface. **Although this avoids damage from burns to the greatest extent possible, avoid the use of three-ray nozzles for late top dressing and use drag hoses.**

For all three-ray nozzles listed in the following, only use the black bayonet nut.

Different three-ray nozzles and their operational areas (at 8 km/h)

- yellow, 50 - 80 l AHL/ha
- red, 80 - 126 l AHL/ha
- blue, 115 - 180 l AHL/ha
- white, 155 - 267 l AHL/ha

6.17.2 7 hole nozzles / FD nozzles (optional)

The same conditions apply for using 7 hole nozzles / FD nozzles as for the three-ray nozzles. In contrast to the three-ray nozzle, in the case of the 7 hole nozzle / FD nozzles, the outlets are not oriented downwards, but instead point to the side. This allows very large drops to be produced on the plants using only slight impact forces.

7 hole nozzle

FD nozzle

The following 7-hole nozzles are available

- SJ7-02-CE 74 – 120l AHL (at 8 km/h)
- SJ7-03-CE 110 – 180l AUS
- SJ7-04-CE 148 – 240l AUS
- SJ7-05-CE 184 – 300l AUS
- SJ7-06-CE 222 – 411l AUS
- SJ7-08-CE 295 – 480l AUS

The following FD nozzles are available

- FD 04 150 - 240 l AHL/ha (at 8 km/h)
- FD 05 190 - 300 l AUS/ha
- FD 06 230 - 360 l AUS/ha
- FD 08 300 - 480 l AUS/ha
- FD 10 370 - 600 l AUS/ha*

6.17.3 Drag hose equipment for Super-L boom (optional)

- **with dosing discs for late top dressing with liquid fertiliser**

(1) Drag hoses at 25 cm intervals, after fitting the 2nd spray line.

(2) Bayonet connection with dosing discs.

(3) Metal weights - stabilise the position of the hoses during operation.

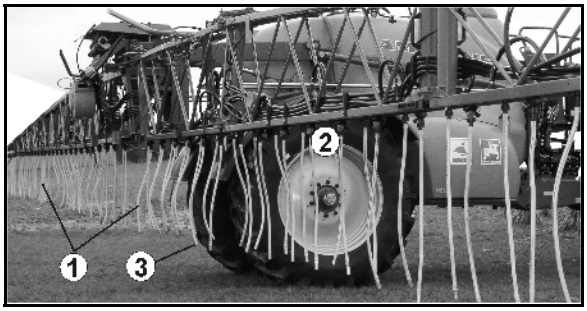

(1) Deflector hoop for the transport position.

(2) Transport position raised by lowering the transport hook

(3) Spacing runners

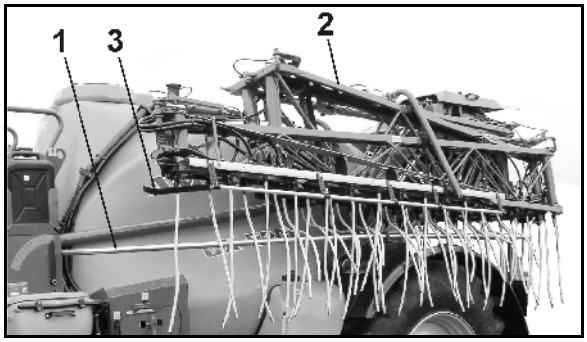

> Remove both spacing runners (Fig. 112/3) when operating drag hoses.

(1) one setting tap for every boom part width section:

- **a** Spraying via both spray lines with drag hoses
- **b** Spraying via a standard spray line
- **c** Spraying via the 2nd spray line only

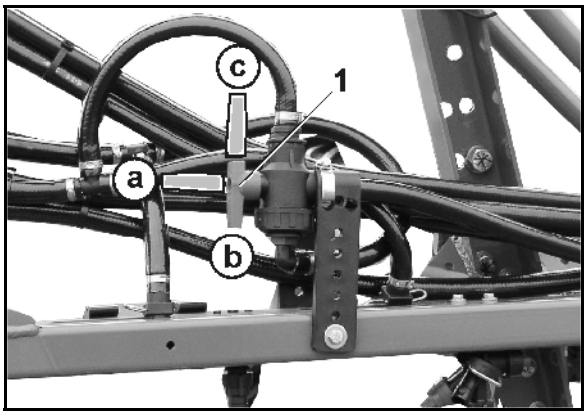

> Remove drag hoses for normal spraying operation.
>
> After removing the drag hoses, seal off the nozzle bodies with blanks

6.18 Exterior wash down kit

Exterior wash down kit for cleaning the field sprayer, includes

- Hose coiler,
- 20 m pressure hose,
- Spray gun

Operating pressure: 10 bar
Water output: 18 l/min

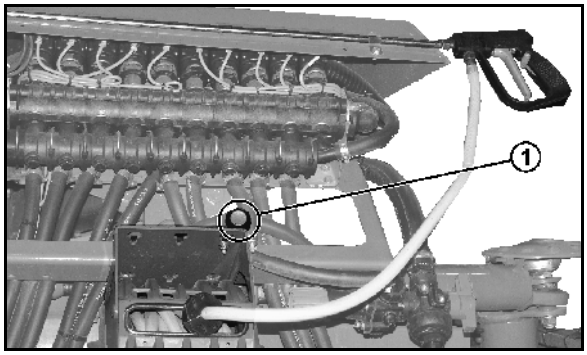

(1) Button to activate the exterior wash down kit.

Secure the spray gun against unintentional spraying using the locking mechanism (1)

- before each pause in spraying.
- before depositing the spray gun in its holder after cleaning work is complete.

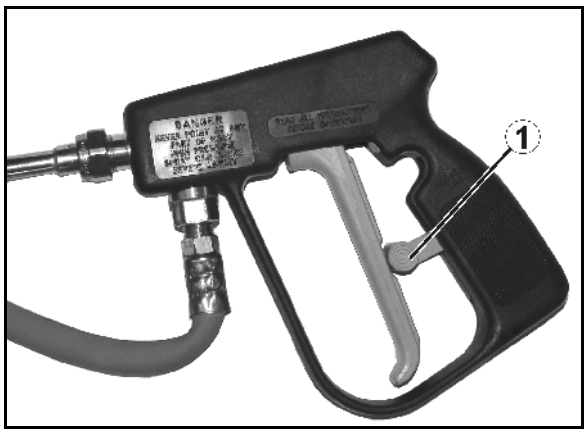

6.19 Lift module

(option)

The lifting module allows the sprayer boom to be raised by an additional 70 cm to a nozzle height of 3.20 m.

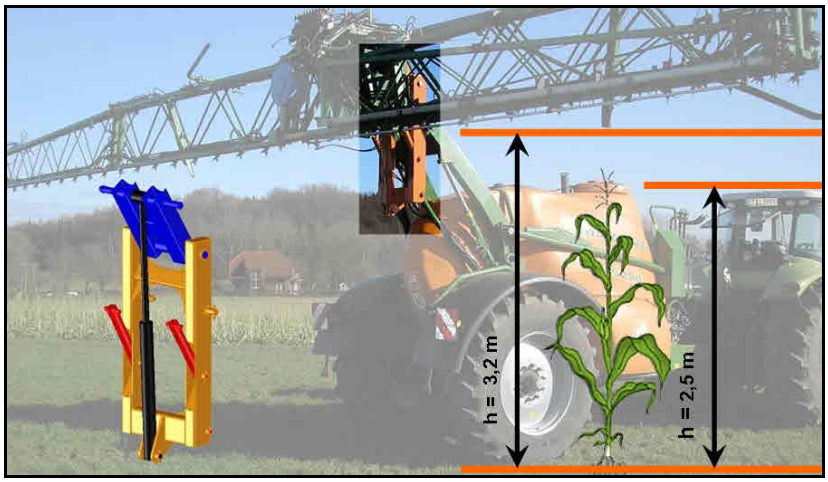

The lifting module is operated using a switch in the cabin.

+ Lift the sprayer boom additionally using the lifting module.

+ Lower the sprayer boom additionally using the lifting module.

DANGER

Risk of accidents and danger of damaging the machine.

- When driving on the roads, the sprayer boom must not be raised above the lifting module.

→ The total height of the machine with lifting module can be considerably higher than 4 m.

- Use the lifting module only when the sprayer boom is folded out.
- Lower the lifting module again before folding in the sprayer boom. The sprayer boom can otherwise not be put into the transport lock.
- Always lift or lower the lifting module to the end position!

6.20 Control terminal cover

The cover keeps the control terminal clean.

(1) Control terminal cover
(2) Lock
(3) Handle
(4) Control terminal illumination

6.21 Accessories for protecting the plants

The following accessories serve to protect the plants in tall crops:

- Wheel gear cover (1)

  Recommended if the wheel gear protrudes over the rim.
- Stalk divider (2)
- Flexible underbody cover, 80 cm wide

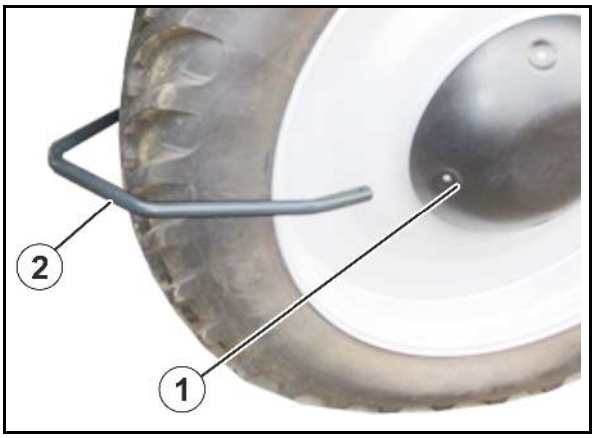

The sunflower kit is suitable for Pantera-H with tyres with a maximum width of 380 mm and maximum height of approx. 1950 mm.

(1) Wheel housing

(2) Underbody cover

(3) Stalk divider

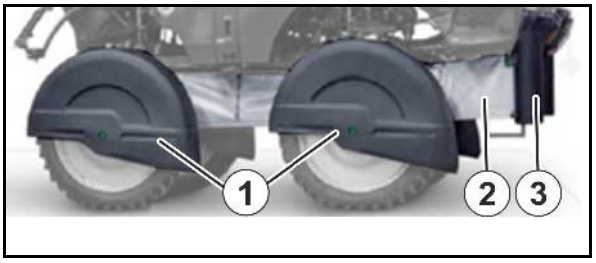

7 AmaDrive vehicle terminal

The AmaDrive is used for adjusting and monitoring almost all functions of the vehicle and several functions of the field sprayer.

It is operated via the touch-sensitive function fields on the 10.4" touch screen terminal.

Touch sensitive function fields:

- active → yellow
- not active → grey

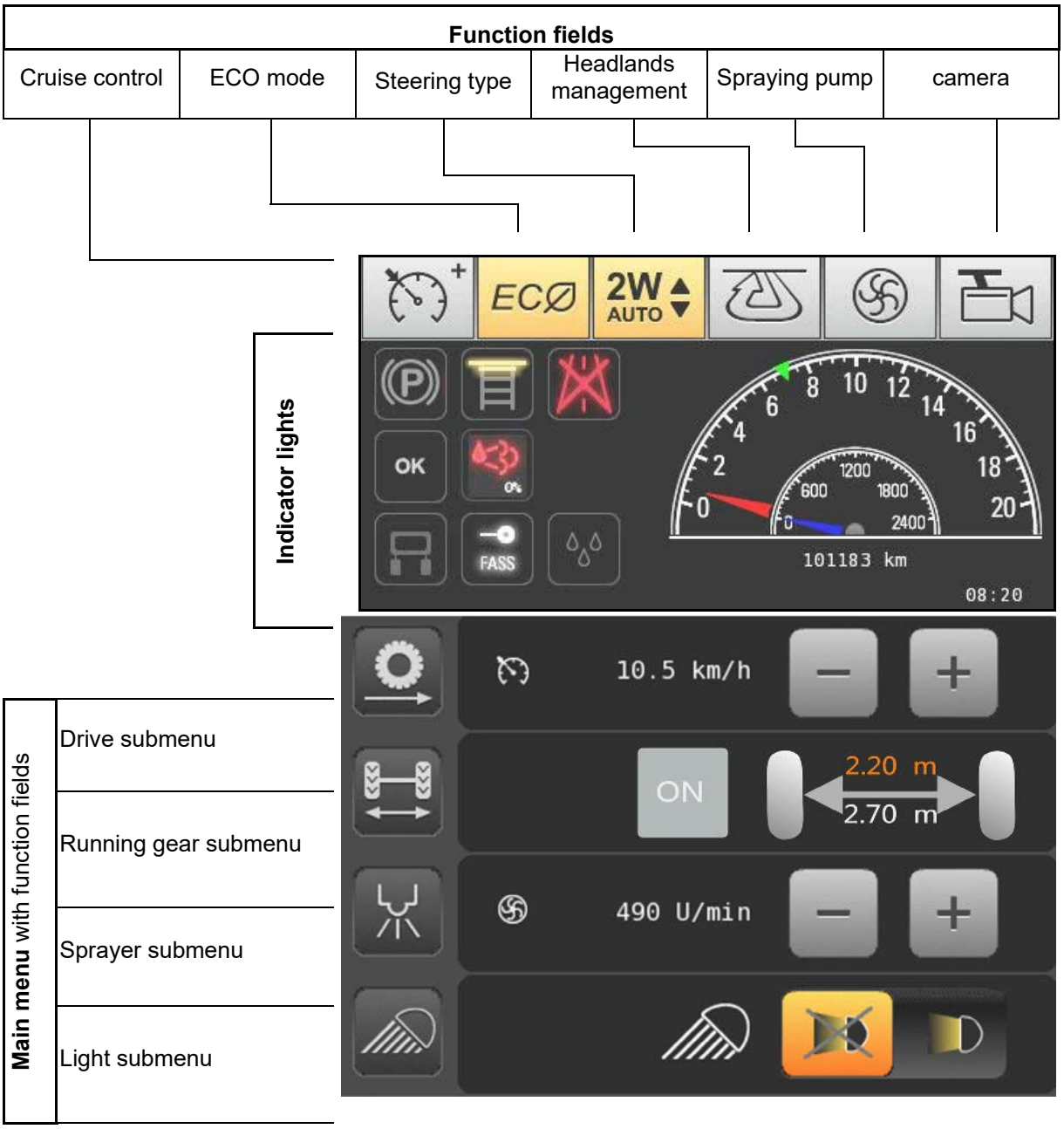

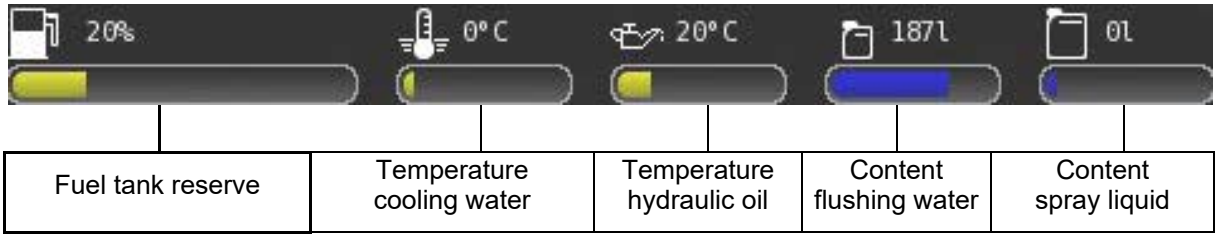

7.1 Indicator lights

Parking brake	Released	Auto hold activated	Machine is braked (red)
Ladder	Ladder raised: when driving (grey), when stationary (yellow) While raising	Ladder lowered: when driving (red), when stationary (grey) While lowering	
Mode	Field	Road	
Error messages	OK None	! Error messages present	
DEF (Euro 4)	DEF fill level (0-100%) red – Refill DEF.		
Lifting module	Lowered	Raised	
Height (only Pantera H)	Lowered	Raised	
Suction tap (only for CP2)	Position of suction tap	Suction from spray liquid tank Suction through suction hose Suction from flushing water tank	
Comfort function (only for CP2)	not active (grey)	Comfort function active (blue)	

7.2 Touch sensitive function fields

	By actuating the softkey, the corresponding function is switched on and marked in colour on the display.

	Cruise control/Switching the cruise control+ on and off (cruise control+ for higher power requirements) Press and hold the field for 5 seconds to switch on and off.
ECO	**Switch the ECO mode on and off** → The ECO mode is active after starting the engine and switching from road to field.
	Selecting the type of steering
4W MAN	• Manual 4-wheel steering (crab steering) – Display green → Rear wheel steering using the buttons on the AmaPilot driving lever
4W AUTO	• Automatic 4-wheel steering – Display yellow • Automatic 4-wheel steering (crab steering) – Display green Hold the softkey for 3 seconds! → Rear wheel steering with steering wheel
2W AUTO	• Automatic 4-wheel steering – Display yellow
	Switching headlands management on and off Headlands management switched on: • Driving with four-wheel steering system in the headlands. • Driving with two-wheel steering system in the tramline. → The headland management can be overridden using the 4W AUTO or the multi-function stick.
	Switch the spraying pump on and off
	Camera system with night-view technology
10:34 (Clock)	**Call up the configuration and diagnosis menu**
009443 km (Total distance driven)	**Menu for statistics, particle filters and consumption**

Warning / Fault

Press the soft key for more information!

7.3 Instrument panel

Displays:
- Speed with display range of
  - 0-45 / 60 km/h in road mode
  - 0-20 km/h in field mode
- Motor speed with display from 0-2400 rpm
- Total distance driven in km /
- Time of day
- Cruise control settings

7.4 Main menu

Function fields **Quick access**

Drive sub-menu with display and cruise control adjuster

Running gear sub-menu with display and setting of the track width.

Sprayer sub-menu with display and setting of the pump speed.

Lighting sub-menu with operation of the work lights.

Back to the main menu: activate submenu function field

Quick access in the main menu allows the spontaneous switching of several functions without having to call up the respective sub-menu.

Adjusting the track width in the main menu

(1) Target track width

(2) Actual track width

While driving on the field:

1. ON Switch on the track width adjustment

2. + , − Enter the setpoint track width.

→ The track width will be adjusted while driving.

7.4.1 Menu structure overview

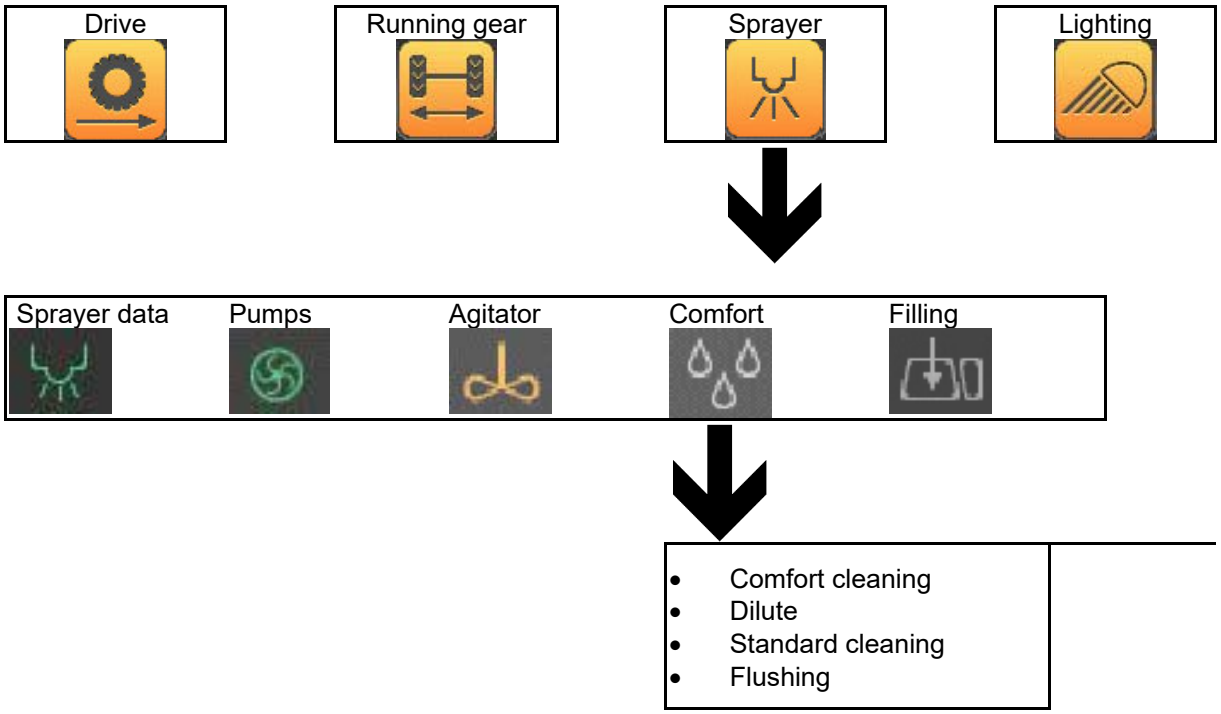

7.5 Drive submenu

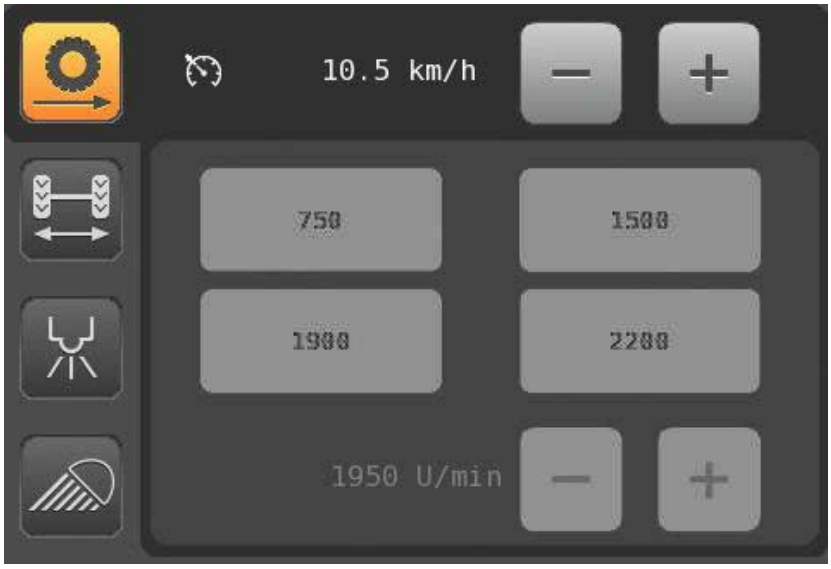

Cruise control function in field mode

/ First activate the speed control in the menu bar.

- Setting the set speed via , .

→ The set speed set is displayed.

- When the driver moves the multi-function stick into the foremost position, the Pantera will accelerate to the set speed.
- The speed can be adapted to the situation at any time - the cruise control remains active.
- The cruise control cannot be activated in road mode.

Directly select the engine speed
(only if ECO mode is deactivated and the Field mode is activated):

- Direct engine speed selection by pressing one of the four pre-assigned function fields.
- Select the engine speed using ,

→ The engine speed set is displayed.

→ Maximum engine speed 2000 rpm.

Assign required engine speed to function fields:

1. Selection of the engine speed ,
2. To directly select any function field, press it for 3 seconds.

→ Function field is saved with the value displayed.

7.6 Running gear submenu

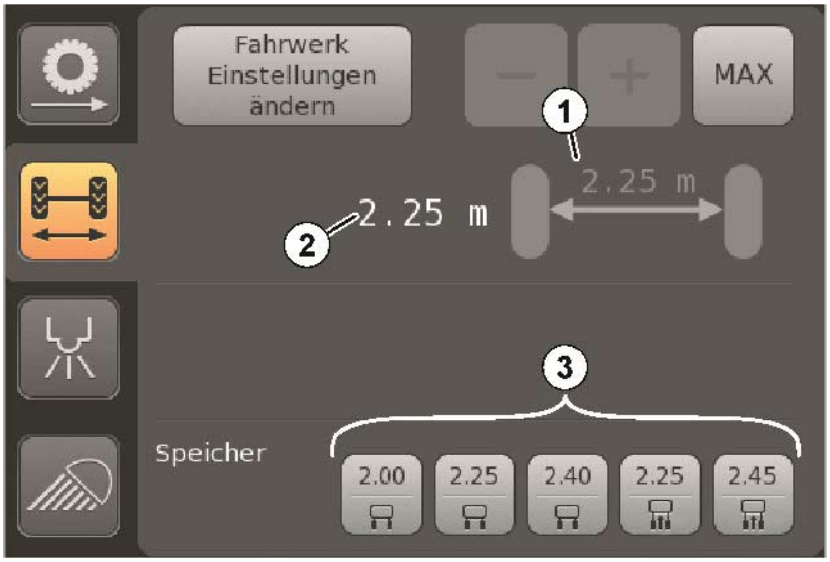

It is only possible to adjust the track width to a limited extent when driving across slopes, depending on the load status, the soil properties and the forward speed.

Change track width

(1) Set track width display

(2) Actual track width display

(3) Saved track widths for direct selection

The setting is carried out during a short adjustment run.

1. Press [Fahrwerk Einstellungen ändern].

→ Machine changes to the mode for changing the track.

→ Increase idling speed is set.

2. [+], [−] Entering the setpoint track width.

   Or [1.80] direct selection

3. Press the driving lever forwards.

→ The machine runs forwards at 2 km/h until the desired track width is reached and then automatically stands still.

4. Pull the driving lever backwards to the neutral position.

5. [icon] Back to the main menu.

The track width can be preset in the following ranges, depending on the tyres:

- Pantera: 1.80 m – 2.40 m
- Pantera W: 2.25 m – 3.00 m

Adjust the maximum track width

The maximum track width can be set in field mode when driving for travelling over a particularly sloping terrain.

1.

should be pressed when driving.

→ The maximum track width is set.

2.

should be pressed again when driving.

→ The old track width is reset.

If the vehicle is stopped during when the track width is set to the maximum position, the maximum track width will be taken over as the nominal track width.

Assign function fields for direct selection:

By assigning a function field, the track width (all Pantera´s) and heights (Pantera H) can be stored.

1.

,

Enter the setpoint track width.

2.
,
Select raised or lowered machine. (only Pantera H)

3.

Press any function field for 3 seconds to select it directly.

→ Function field is saved with the value displayed.

	Track width		Track width
	Machine lowered		Machine raised (only Pantera H)

7.6.1 Height adjustment Pantera H

- The machine can only be set in the end positions top or bottom.
- The minimum track width in the top position is 2.10 m.

The height adjustment is carried out together with the track width adjustment during a short adjustment run

1. Press Fahrwerk Einstellungen ändern.

→ The machine changes to the mode for setting the running gear.

→ Increased idling speed is set.

2. +, − Enter the setpoint track width.
3. , Select raised or lowered machine.
   Or 2.25 direct selection
4. Press the driving lever forwards.

→ The machine drives forwards at 2 km/h until the desired track width is reached and then automatically stands still.

5. Pull the driving lever backwards to the neutral position.
6. Back to the main menu.

If the adjustment procedure is interrupted by pulling back the driving lever, the running gear is lowered again when starting.

The adjustment procedure has to be restarted.

If the adjustment procedure takes longer than 120 seconds, the running gear is also automatically lowered again.

7.7 Sprayer submenu

Sprayer data

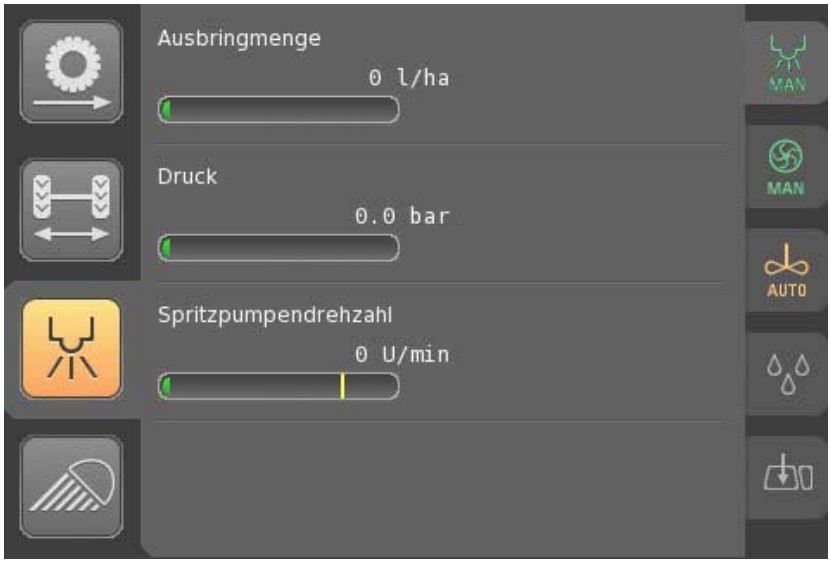

Display the current operating data

- Application rate
- Spraying pressure
- Spraying pump speed

Pump

Setting the spraying pump speed

- Directly select the spray pump speed by pressing one of the 5 pre-assigned function fields.
- Selection of the spray pump speed via , .

→ The spray pump speed set is displayed.

Setting the pump speed between 380 rpm and 580 rpm:

- Fast filling: 580 rpm. (only possible at a standstill)
- For standard applications (~ 200 l/ha and ~ 10 km/h) without granules and fertiliser: 420 - 460 rpm
- In case of high demands on the stirring performance and application rates: 480 - 540 rpm

Assign function fields for direct selection

1. Selection of number of spray pumps via ,
2.

Press any function field for 3 seconds to select it directly.

→ Function field is saved with the value displayed.

7.7.1 Agitator

- AUTO The agitator intensity is regulated depending on the filling level.
- MAN

  +, − Adjust the agitator intensity to special requirements manually

7.7.1 Comfort operation with sub-menus

Comfort cleaning

When running the comfort cleaning, the complete machine is cleaned in several sections.

- The spreading of diluted spray liquid / cleaning water is carried out automatically during the comfort cleaning.
- The flushing water tank must be filled with at least 150 litres of water.

1. [+], [−] Enter the water quantity for cleaning.

- The amount of water for cleaning (blue) is displayed compared with the existing flushing water quantity (green).

2. [Start] Start the comfort cleaning.

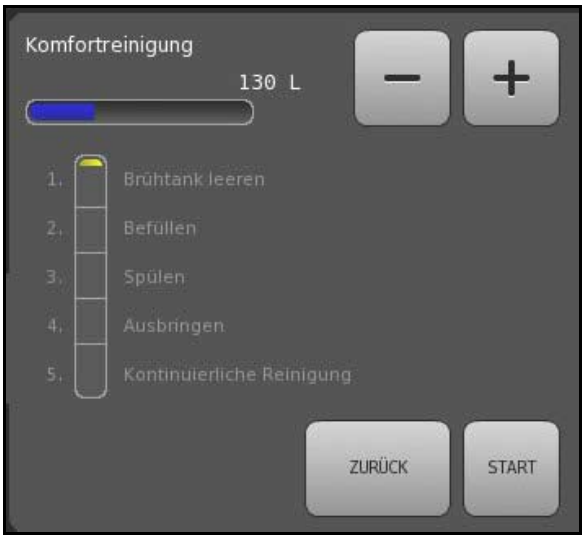

Dilute

When diluting, flushing water is pumped into the spray liquid tank.

1. [+], [−] Enter the water quantity for diluting.

- The amount of water for diluting (blue) is displayed compared with the existing flushing water quantity (green).

2. [Start] Start dilution.

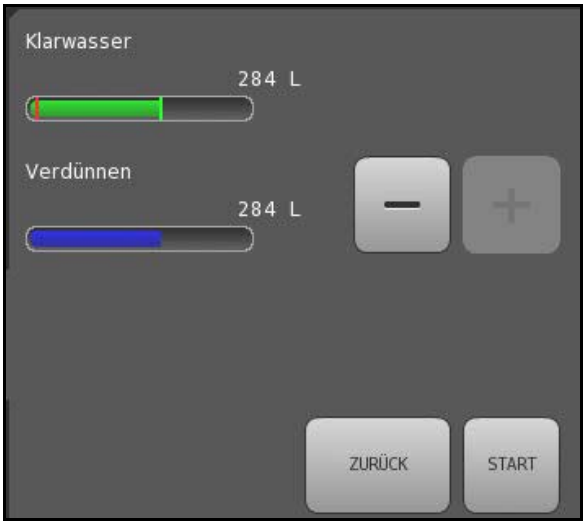

Standard cleaning

- The spray liquid tank must be empty!
- 160 litres of flushing water are required.
- Agitator and tank are cleaned.

1. Start Starting the standard cleaning.

→ 160 litres of cleaning water remain in the spray liquid tank and can be spread.

2. Spray the content of the spray liquid tank to the area already treated.

Flush

The flushing is intended for cleaning the sprayer with filled tank when the work is interrupted.

1. +, − Enter the water quantity for flushing.

- Spread the spray liquid until water runs out of the nozzles.

When flushing the boom by spraying out the liquid, the spray liquid concentration is not reduced (set the maximum target rate).

When flushing the boom without spraying out, the spray liquid concentration is reduced through the DUS system.

HighFlow: the HighFlow circuit is flushed with cleaning water.

- The amount of water for flushing (blue) is displayed compared with the existing flushing water quantity (green).

2. Start Start flushing and switch on the sprayer at the same time.
3. Stop Stop flushing.

7.7.2 Filling

The spray liquid tank and flushing water tank can be filled at the same time and separately via the suction hose.

1. Enter the setpoint fill level in increments +/- 50, 500 / +/- 10, 100.
2. Start Starting the filling process.

→ The filling is interrupted automatically once the nominal filling level has been reached.

As an alternative, filling the spray liquid tank and flushing water tank can also be carried out on the control terminal from the terminal there.

7.8 Work lights, submenu

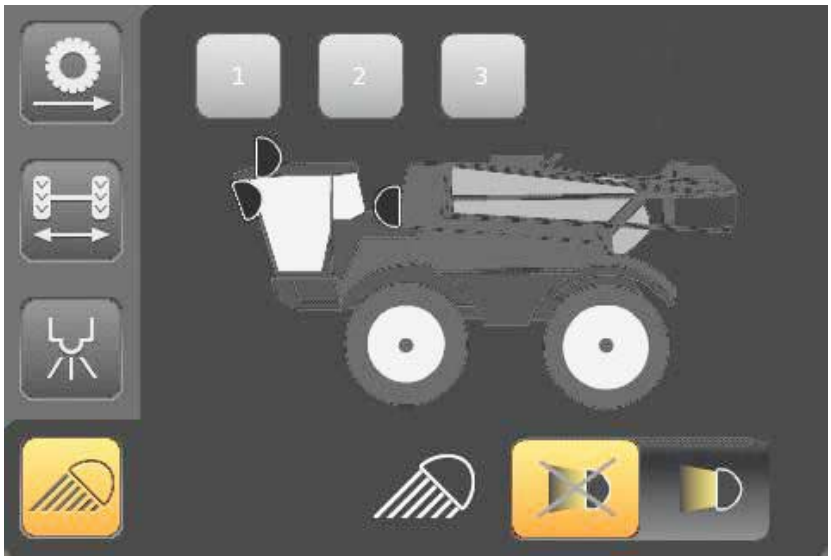

Adjustment of the vehicle, working and boom illumination

The headlights can be switched separately:

- 1, 2 Work lights in the cabin roof.
- 3 Boom illumination from the front.
- Switches the work lights (1, 2, 3) together.
- Switches the work lights off.

Switch the boom work lights using the ISOBUS control terminal, the control panel lighting is switched automatically.

The work lights can only be switched on when the dipped beam is switched on.

The side-view floodlights are switched on via the control lever for the indicators when in field mode.

7.9 Operating data

Function field

009443 km

(Total distance driven)

- Scroll to next page
- Scroll to previous page
- Leave operating data

- Delete memory (keep pressed for 3 seconds)

Euro 4 Emission Standard:

- REG ON Only start the regeneration of the diesel particle filter when prompted.

-

Delete memory (keep pressed for 3 seconds)

7.10 Configuration

Function field

10:34
(Clock)

- The configuration menu comprises the sub-menus

- Lower section in every sub-menu:

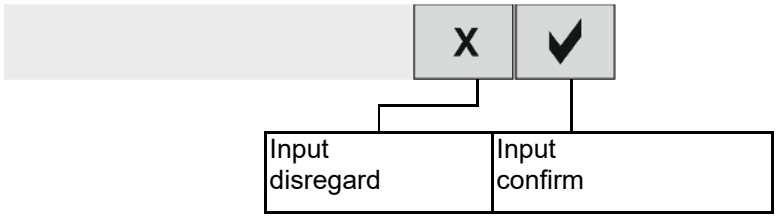

1

(1) Setting the time: Hours Minutes

(2) Setting the display brightness:
Setting range from 1 to 5

(3) Increment of the speed setting of the cruise control in the drive menu:
Setting range from 0.1 km/h to 1 km/h

(4) Increment when setting the track width in the running gear menu:
Setting range from 5 cm to 10 cm

(5) Touch sensitivity of the touchscreen display.
Setting range 0% to 100%

2

1

2

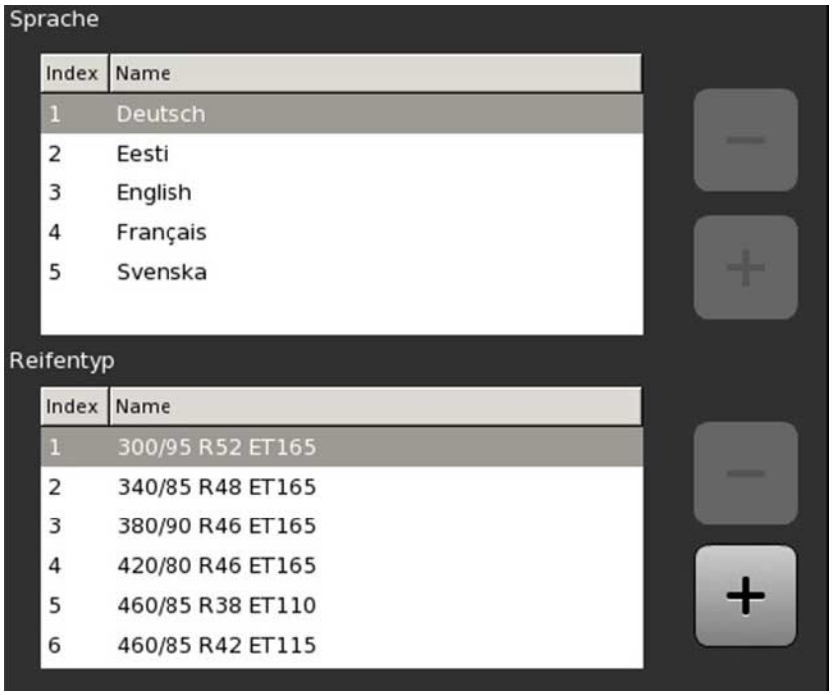

(1) Language selection

(2) Entering the tyres mounted

The tyre size have to be selected correctly so that the set track width corresponds with the real track width.

3

Only for customer services, password required

5

1

2

3

(1) Central lubrication

- Time interval after which lubrication is performed
- Lubrication time
- Perform single lubrication

(2) Speed correction

The speed transmitted to the ISOBUS can be corrected

(3) External hydraulic system

Adjustment of the volumetric flow to the consumers (only CP1)

6

1.
2.
3.

(1) 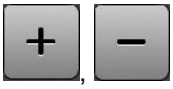 Enter the number of installed cameras

Show the camera view mirrored (grey)/normal (yellow)

(2) Drain the flushing water valves (open the valves until the menu is exited)

(3) Lower the machine for transport on a low-bed trailer / lift machine for driving.

(4) Software information

When restarting the lowered machine, the following message is shown: Running gear transport position selected.

→ Lift the machine before starting to drive.

7.11 Error messages

All error messages that have been issued can be displayed.

8 Filling terminal

Displays on the terminal

(1) Spray liquid tank volume

(2) Flushing water tank volume

MAX: nominal filling level entered

ACT: current filling level

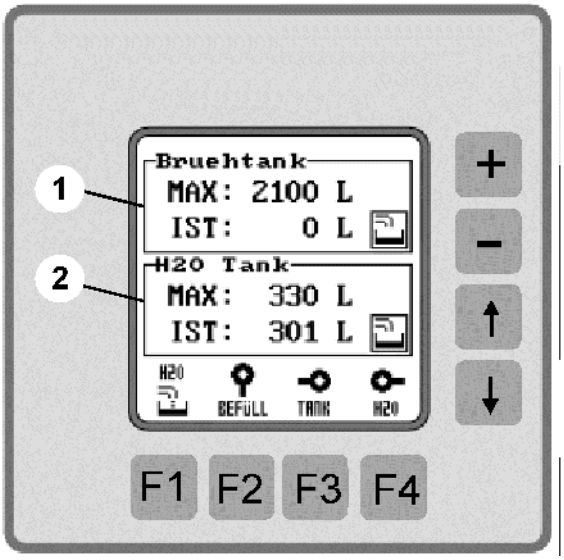

Keys on the terminal

- F1 Fill the flushing water tank, interrupt filling.

  Flushing water pump is switched automatically.
- F2 Fill the spray liquid tank.
- F3 Suction from the spray liquid tank / filling interrupted.
- F4 Suction from flushing water tank.
- +, − Enter the nominal filling level for tank selected.
- ↑ Select the spray liquid tank (symbol at the top flashes).
- ↓ Select flushing water tank (symbol at the bottom flashes).

9 Start-up

- Before operating the machine for the first time the operator must have read and understood the operating manual.
- The machine must meet the national road traffic regulations.
- The operator and the user shall be responsible for compliance with the statutory road traffic regulations.

9.1 Antifreeze in the spray liquid tank

Depending on the season and marking on the implement, the implement is protected with a biodegradable antifreeze against damage due to freezing temperatures.

The antifreeze can be sprayed out with the spray liquid at first use or pumped out.

Antifreeze that was pumped out can be reused or disposed of properly.

9.2 Securing machine against accidental starting and rolling

WARNING

Risk of crushing, shearing, cutting, being caught and/or drawn in, or impact when making interventions in the machine, through

- **unintentional falling of raised, unsecured machine parts.**
- **unintentional start-up and rolling of the tractor-machine combination.**
- Secure the the machine against unintentional start-up and rolling before making any intervention in the machine.
- It is forbidden to make any intervention in the machine, such as installation, adjustment, troubleshooting, cleaning, maintenance and repairs
  - when the machine is running
  - when the ignition key is inserted in the ignition lock.
  - when the machine is not secured against unintentional rolling using their parking brakes and/or wheel chocks.

  When carrying out such work, there is a high risk of contact with unsecured components.

10 Driving on public roads

- During driving on public roads, follow the instructions given in the section "Safety instructions for the operator", page 29.
- Before moving off, check:
  - the lighting system for damage, proper operation and cleanliness,
  - the braking and hydraulic systems for obvious defects.
  - the function of the brake system

WARNING

Risk of crushing, cutting, being caught and/or drawn in, or impact from tipping and insufficient stability.

- Drive in such a way that you always have full control over the tractor with the attached machine.

  In so doing, take your personal abilities into account, as well as the road, traffic, visibility and weather conditions, the driving characteristics of the tractor and the connected machine.

WARNING

Risk of falling when riding on the machine, contrary to instructions.

It is forbidden to ride on the machine and/or climb the machine while it is running.

Instruct people to leave the loading site before approaching the machine.

WARNING

Risk of breaking during operation, insufficient stability and insufficient tractor steering and braking power from improper use of the tractor.

Comply with the maximum load of the connected machine. If necessary, drive only with a partially filled tank.

DANGER

Risk of accident from excess machine width!

The permissible overall width of the machine may not be exceeded when travelling on the roads.

If required, reduce the track width in order to maintain the permissible overall width of 2550 mm.

The wings form the outermost edge of the machine.

The wheels may not stick out any further than them.

DANGER

Risk of accident from excess machine width!

- Pantera-W:

  The total width of the machine is 2750 mm.

- Machines with wide mudguards (700 mm):

  The total width of the machine is 2865 mm.

Please observe the country-specific specifications for the permissible total width of the machine.

10.1 Requirements for driving on public roads

DANGER

Risk of accident if the following measures are not carried out.

- Select road mode.

→ Two-wheel steering system is activated..

→ No cruise control function.

- With three-piece booms, check that the additional rear lights and the additional red reflector are ready for operation.
- Move the sprayer boom to the transport position and secure mechanically.

→ If a working width reduction of the outer elements is mounted, unfold it for transporting purposes

- The cabin ladder must be folded up.
- Pantera H: lower the machine again for travelling on the road.
- When filling the spray liquid tank, note the permissible total weight or the permissible wheel and axle loads.
- The induction bowl must be pivoted up to the transport position and secured mechanically.
- The ladder on the fuel tank must be pivoted up to the transport position and secured mechanically.
- If a boom extension (option) is mounted, move it into the transport position.
- Switch the work lights off during transport to avoid blinding other motorists.
- Lower the lifting module (option) when transporting so that the maximum transport height of 4 m is maintained.

11 Driving with the Pantera

11.1 Entering and exiting the cab

WARNING

Risk of injuries from falling from the cabin.

- When leaving the cabin, make sure that the ladder has been lowered completely.

  You cannot see if the ladder has been lowered from inside the cabin.
- Climb up and down the ladder facing the machine (3 point rule).

11.2 Starting the engine

1. Switch on the power supply using the main switch.
2. Check the neutral position of the driving lever.
3. Turn the ignition key to the start position. When the engine starts and runs, let go of the key.

→ After standing for a long while, the **AmaDrive** needs 90 seconds until the display appears on the screen.

You are however, already able to start driving.

4. Allow the engine to run warm before you start to drive, do not start with full speed.

The diesel engine does not have a pre-glowing function.

CAUTION

It is not possible to start the engine by jump starting (towing). Damage will be caused to the drive when attempting this!

Always use an auxiliary battery when the battery of the machine is empty.

11.3 Driving with the machine

DANGER

Risk of accidents when driving on the road in field mode.

When driving on the road, select the road mode.

DANGER

Risk of an accident due to overtiredness and lack of concentration.

Make sure enough breaks are taken. Reduced times at the steering wheel are necessary due to the influence of noise and vibrations.

When driving on slopes, switch on the AutoHold function to prevent rolling back when moving off.

1. Start the engine.

After starting the engine:

2. Release the parking brake.
3. Push rocker switch in position **+** and keep pressed.

→ The ladder pivots to the transport position.

→ Observe the **AmaDrive** display.

4. Push rocker switch downwards.

→ Select road mode for driving on roads and field mode for driving on fields.

5. Adjust the track width.

→ When driving on public roads, the wheels are not allowed to protrude over the outer dimensions of the machine.

6. When driving on slopes, switch on the AutoHold function.
7. Start to drive using the drive actuator
8. For braking, use the drive actuator or, where necessary, the brake pedal at the same time.

CAUTION

Perform a track correction on a daily basis!

Otherwise there is a risk of causing an accident due to the track being set incorrectly, see page 65.

11.3.1 Road travelling / field travelling

Road mode: Push rocker switch downwards.

AmaDrive display:

- Only two-wheel steering possible.
- No cruise control function.
- Warning when driving with ladder lowered.
- Warning: Track width set according to the type approval.

Field mode: Unlock rocker switch and push upwards.

AmaDrive display:

- Speed limited to 20 km/h.
- Warning when driving with ladder lowered.

11.4 Stopping the engine

Park the implement on a level parking surface with solid ground.

1. Depending on the previous loading, allow the engine to run idle for a few minutes.
2. Move the driving lever to neutral.
3. Actuate the hand brake via the switch.
4. Push rocker switch in position **-** and keep pressed.

→ The ladder pivots to the park position.

→ Observe the **AMADRIVE** display.

5. Turn the ignition key back and pull it out of the lock.

→ The motor is stopped.

The power supply will be automatically switched off after 2 hours.

Cooling-down when the engine is running is especially important for the turbocharger bearing. The turbocharger is cooled with oil as long as the engine is running.

Stopping the engine immediately after work may lead to very high temperatures in the turbocharger. This will reduce the operating life of the turbocharger considerably.

12 Using the field sprayer

When using the machine, observe the information in the following sections:

- "Warning symbols and other labels on the machine" starting on page 18 and
- "Safety information for the user", starting on page 28 ff.

Observing this information is important for your safety.

WARNING

Risk of contusions, drawing in and catching during machine operation without the intended protective equipment!

Only ever start up the machine when the protective equipment is fully installed.

Observe the separate operating manual for the control terminal and the implement control software.

WARNING

DistanceControl, ContourControl

Risk of injury due to accidental movement of the sprayer boom in automatic mode when entering the radiation area of the ultra-sound sensor.

Lock the sprayer boom

- Before leaving the tractor.
- If unauthorised persons are standing in the area of the sprayer boom.

12.1 Using the machine with comfort package 2

The functions of the Comfort package 2 are operated via

- the AmaDrive
- the filling terminal.

Before spraying:

- Fill the spray liquid tank and the flushing water tank via the suction coupling with automatic filling stop.

While spraying:

- Automatic filling level dependent regulation of the main agitator.

After spraying:

- Remote controllable dilution of the remaining amount.
- Remote controllable cleaning of the machine when the machine is filled or empty.
- Cleaning the filled machine intake filter.

12.2 Preparing the spray liquid

Prepare the spray liquid with the TwinTerminal on the control panel.

WARNING

Risk of accidental contact with crop protection agent and/or spray liquid.

- Always induct the crop protection agent into the spray liquid tank using the induction bowl.
- Swivel the induction bowl into the filling position before pouring in crop protection agent.
- Observe the safety regulations on physical protective equipment and breathing apparatus for use when handling crop protection agent and preparing the spray liquid, in the instructions for use of the crop protection agent.
- Do not prepare the spray liquid in the vicinity of wells or surface water.
- Avoid leaks and contamination with crop protection agent and/or spray liquid through appropriate conduct and wearing appropriate physical protection equipment.
- To avert risks to third parties, do not leave the prepared spray liquid, unused crop protection agent or used crop protection agent canisters and the uncleaned field sprayer unattended.
- Protect contaminated crop protection agent canisters and the contaminated field sprayer from precipitation.
- During and after preparing the spray liquid, ensure sufficient cleanliness in order that risks may be kept as low as possible (e.g. thoroughly wash used gloves before removing them and dispose of the washing water and cleaning fluid in the proper manner).

- The prescribed water and agent spray rate can be found in the directions for use of the crop protection agent.
- Please read intently the directions for use of the agent and observe the specified precautions!

WARNING

Danger for persons / animals due to accidental contact with spray liquid when filling the spray liquid tank!

- Wear personal protective equipment when working with crop protection agents / releasing spray liquid from the spray liquid tank. The required personal protective equipment depends on the information provided by the manufacturer, the product information, the instructions for use, the safety data sheet or the instruction manual for the crop protection agent to be used.
- Never leave the field sprayer unattended when filling it.
  - Never fill the spray liquid tank above the nominal volume.
  - Never exceed the permissible payload for the field sprayer when filling the spray liquid tank. Always pay attention to the respective specific weight of the liquid to be filled.
  - When filling, continuously watch the fill level indicator to prevent overfilling the spray liquid tank.
  - When filling the spray liquid tank on a sealed surface, make sure that no spray liquid gets into the waste water system.
- Before filling, check the field sprayer for damage, such as leaky containers and hoses and make sure all the control elements are in the correct position.

While filling, pay attention to the permissible load capacity of your field sprayer. Always take the differing specific weights [kg/l] for the individual liquids into account while filling your field sprayer.

Specific weights of different liquids

Liquid	Water	Urea	AUS	NP solution
Density [kg/l]	1	1.11	1.28	1.38

- As it is difficult to dispose of residues in an environmentally-friendly manner, carefully calculate the required filling quantity or refill quantity to avoid leaving any residue at the end of the spraying operation.
  - To calculate the required refill quantity for final filling of the spray liquid tank, use the "Filling table for remaining spray area". To do this, subtract the technical, undiluted residue in the sprayer boom from the calculated refill quantity!

    Refer to the section "Filling table for remaining areas".

Procedure

1. Determine the required water and agent spray rate by consulting the directions for use of the crop protection agent.
2. Calculate the filling quantity or refill quantity for the area to be treated.
3. Fill the machine and blend in the agent.
4. Agitate the spray liquid before commencing spraying operations in accordance with the instructions of the spraying agent manufacturer.

Fill the machine preferably using a suction hose and blend in the agent while filling.

The induction area is thereby flushed with water constantly.

- During the filling process, start blending in the agent once the tank filling level has reached more than 20%.
- When using more than one agent:
  - Clean the canister immediately after each induction of an agent.
  - Flush the induction port after each induction of an agent.

- When filling, no foam must escape from the spray agent tank.

  The addition of a froth-inhibiting agent also prevents the spray liquid tank from frothing over.

The agitators normally remain switched on from the initial filling to the end of the spraying operation. On this account, the instructions of the agent manufacturer are decisive.

- With the agitator running, feed the water-soluble plastic bag directly into the spray agent tank.
- Before spraying, fully dissolve the urea by circulating the liquid. When dissolving large quantities of urea, the temperature of the spray liquid falls more sharply; the urea consequently dissolves more slowly. The warmer the water, the faster and more completely the urea can dissolve.

- Carefully wash the empty agent canisters, render them unusable, collect and dispose of them in a proper manner. Do not reuse them for other purposes.
- If only spray liquid is available for washing the agent canisters, first use this to carry out preliminary cleaning. Then wash them meticulously when clear fresh water is available, e.g. before preparing the next load for the spray liquid tank or when diluting the residue from the last load.
- Carefully wash out the empty agent tank (e.g. using canister flushing) and add the flushing water to the spray liquid!

High degrees of water hardness above 15° dH (German degrees of hardness) can lead to lime deposits, which may impede the functioning of the implement and must be removed at regular intervals.

12.2.1 Calculating the filling and re-fill quantity

To calculate the required re-fill quantity for final filling of the spray liquid tank use the "Filling table for remaining spray area", page 179.

Example 1:

The following are given:

Tank nominal volume	1000 l
Residue in the tank	0 l
Water consumption	400 l/ha
Agent required per ha	
Agent A	1.5 kg
Agent B	1.0 l

Question:

How many litres of water, how many kg of Agent A and how many litres of Agent B must be used to treat a surface of 2.5 ha in area?

Answer:

Water:	400 l/ha	x	2.5 ha	=	1000 l
Agent A	1.5 kg/ha	x	2.5 ha	=	3.75 kg
Agent B	1.0 l/ha	x	2.5 ha	=	2.5 l

Example 2:

The following are given:

Tank nominal volume	1000 l
Residue in the tank	200 l
Water consumption	500 l/ha
Recommended concentration	0.15 %

Question 1:

How many litres or kg of agent are needed to fill the tank?

Question 2:

How large is the area to be treated in ha if a residue of 20 l remains in the tank after spraying?

Formula and answer to Question 1:

$$\frac{\text{Refill amount of water [l] x Concentration [\%]}}{100} = \text{Addition of agent[l or kg]}$$

$$\frac{(1000 - 200)\ [l] \times 0.15\ [\%]}{100} = 1.2\ [l \text{ or } kg]$$

Formula and answer to Question 2:

$$\frac{\text{Quantity of liquid available [l] – Residue [l]}}{\text{Water consumption [l/ha]}} = \text{Area to be treated [ha]}$$

$$\frac{\text{1000 [l] (tank nominal volume) – 20 [l] (residue)}}{\text{500 [l/ha] Water consumption}} = \text{1.96 [ha]}$$

12.2.2 Filling table for remaining spray area

To calculate the required re-fill quantity for final filling of the spray liquid tank use the "Filling table for remaining spray area". Deduct the residue in the spray line from the calculated re-fill quantity. See "Spray lines" section, page **51**.

The specified re-fill quantities apply for a spray rate of 100 l/ha. For other spray rates, the re-fill quantity increases by a multiple.

Distance travelled [m]	Re-fill quantities [l] for sprayer booms with working widths [m] of									
	20m	21m	24 m	27 m	28 m	30 m	32 m	33 m	36 m	40 m
10	2	2	2	3	3	3	3	3	4	4
20	4	4	5	5	6	6	6	7	7	8
30	6	6	7	8	8	9	10	10	11	12
40	8	8	10	11	11	12	13	13	14	16
50	10	11	12	14	14	15	16	17	18	20
60	12	13	14	16	17	18	19	20	22	24
70	14	15	17	19	20	21	22	23	25	28
80	16	17	19	22	22	24	26	26	29	32
90	18	19	22	24	25	27	29	30	32	36
100	20	21	24	27	28	30	32	33	36	40
200	40	42	48	54	56	60	64	66	72	80
300	60	63	72	81	84	90	96	99	108	120
400	80	84	96	108	112	120	128	132	144	160
500	100	105	120	135	140	150	160	165	180	200

Fig. 3

Example:

Distance still to travel (travel distance): 100 m
Spray rate: 100 l/ha
Working width: 21 m
Number of part width sections: 5
Spray line residue: 5.2 l

1. Calculate the re-fill quantity using the filling table. For the example, the re-fill quantity is **21 l**.
2. Deduct the residue in the spray line from the calculated re-fill quantity.

Required re-fill quantity: 21 l – 5.2 l = 9.8 l

12.2.3 Filling the spray liquid tank via the suction port

Preferably perform the filling from a suitable container and not from an open water access point.

Otherwise, please observe the local regulations on tapping water from open water supply points.

WARNING
Damage to the suction valve chest caused by pressure filling via the suction connection!

The suction connection is not suitable for pressure filling. This also applies for filling from a higher-elevation source.

1. Start the drive motor on the machine and secure the machine against accidentally driving off.
2. Connect the suction hose to the filling connection **SK** and water access point.
3. Function selection switch **DA** to position .

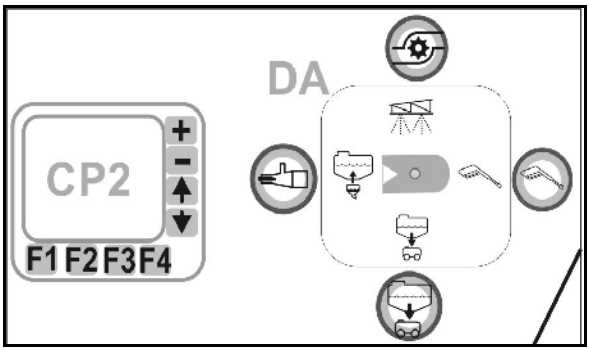

The filling is carried out via:

- o AmaDrive→ →
- o Filling terminal CP2→ F2

AmaDrive

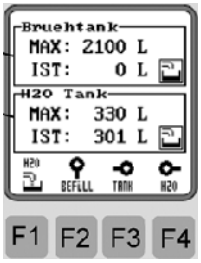

CP2

4. Enter the nominal filling level +/-.
5. Start filling.
   - o AmaDrive → Start
   - o Filling terminal → F2

- Pumping starts automatically.
- The spray liquid tank will be filled up to the target fill level.
- The filling process can be interrupted at any time F2.

6. Start blending in the agent when more than 20% of the tank filling level has been reached.

For simultaneous filling the flushing water tank:

- o AmaDrive → Start (flushing water)
- o Filling terminal → F2

→ If the filling level entered is reached, then filling is ended automatically.

6. Decouple the suction hose from the filling connection.

→ The hose is still filled with water.

After the filling process:

- Spray liquid tank: The pumps continue to run (stirring function); however, they can be switched off manually.

Switching on the injector to increase the suction capacity

Increasing the suction capacity by switching on the injector:

1. Switch on injector operation.
2. Switch tap **IJ** in position

The injector may only be switched on after the pump has drawn in water.

The water being drawn through the injector does not flow through the suction filter.

Additional injector capacity up to 270 l/min.

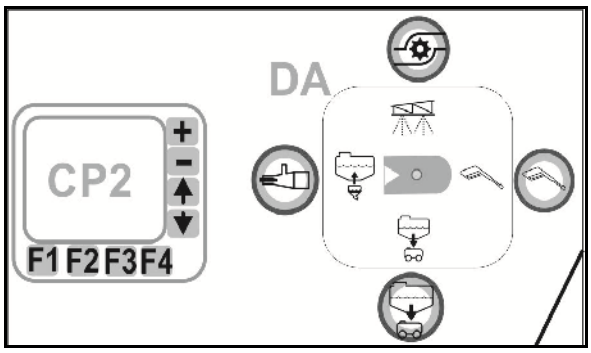

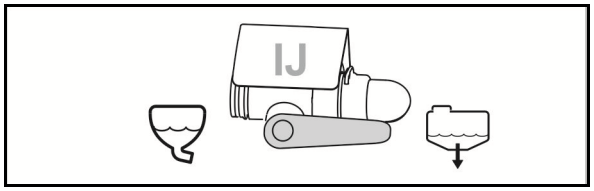

WARNING

Environmental damaged caused by overfilling of the spray liquid tank when the fill stop is not working!

Before the target fill level is reached, the switch tap **IJ** must be switched back to the position .

Otherwise, the automatic fill stop will not work.

12.2.4 Filling the spray liquid tank through the pressure connection

CAUTION

Damage to the spray liquid tank!

- At a filling capacity greater than 600 l/min, keep the lid of the spray liquid tank open during the filling procedure.
- Maximum permitted water pressure: 8 bar

1. Start the drive motor on the machine and secure the machine against accidentally driving off.
2. Fill the flushing water tank first.
3. Couple the pressure hose with the pressure connection and the hydrant.

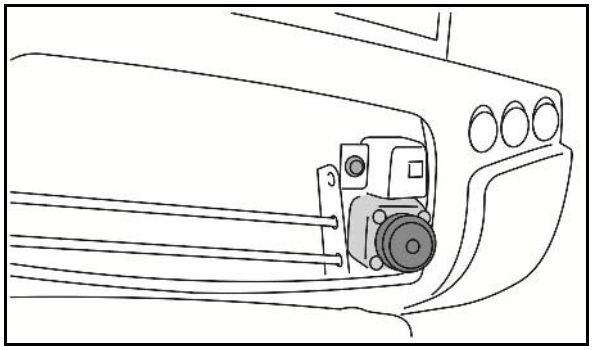

The filling is carried out via:

- o AmaDrive → →
- o Filling terminal CP2

AmaDrive

CP2

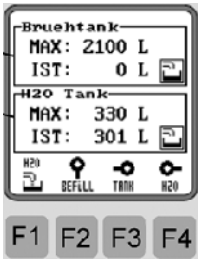

4. Enter the nominal filling level +/-.
5. Start filling using the button on the filling connection.

→ The spray liquid tank will be filled up to the target fill level.

→ The filling process can be interrupted at any time.

Start blending in the agent when more than 20% of the tank filling level has been reached.

To avoid over-filling, interrupt the filling, if necessary, to rinse out the canisters without rushing.

→ When the target fill level has been reached, the filling stops automatically.

6. After the filling process, close the supply-side stop tap, relieve the pressure hose, and uncouple the hose from the filling connection.

The hose is still filled with water.

Alternative starting of the pressure filling and pressure relief using the **DF** button.

12.2.5 Filling the flushing water tank

Before blending in the agents, the flushing water tank needs to be filled so that flushing water is available in the induction bowl.

Filling via the hose:

The flushing water tank can be preferably filled at the same time as the spray liquid tank, see page 180.

For separate filling of the flushing water tank, see page 154, 163.

12.2.6 Flushing agents via the induction bowl

DANGER

Risk of injury due to contact with spray agents and spray liquid.

Wear personal protective equipment.

Flush in the agents during the filling procedure.

1. Lower the induction bowl.

→ The flushing water pump starts automatically.

2. Open the induction bowl cover.
3. Run the pump.
4. Set the function selection switch **DA** to induction .
5. Switch on injector operation.

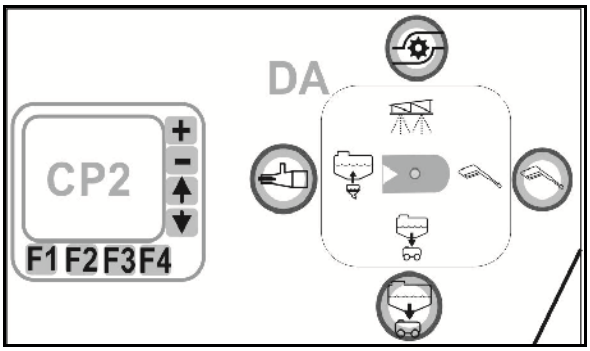

6. Switch tap **IJ** in position suction .
7. Switch tap **EB** in position:
   - o Use suctioned water / spray liquid.
   - o H_2O Use flushing water
8. Pour the quantity of agent calculated and measured for filling the tank into the induction bowl (max. 60 l).

→ The agent is dissolved directly and evacuated.

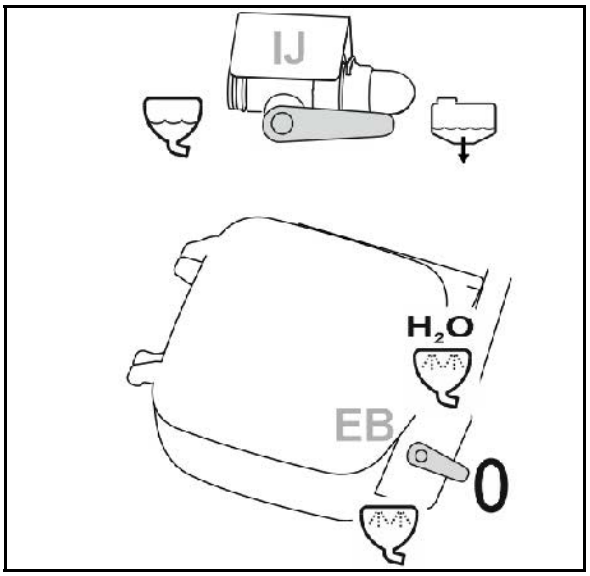

Use clear, fresh water for flushing the canisters and cleaning the induction bowl.

Drawn water is automatically used during suction filling.

Otherwise, use flushing water.

→ Switch tap **EB** in position H_2O .

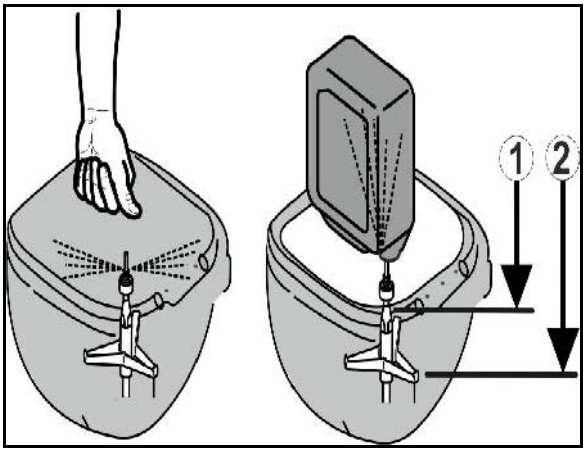

Flush the canister:

9. Wash the canister or other containers using the canister flushing equipment. First position 1, then position 2.

→ Canister is flushed with flushing water.

Cleaning the induction bowl:

10. Clean the surrounding area with the spray pistol.
11. Close the cover of the induction bowl.
12. Start the internal cleaning of the induction bowl by pressing the cover.
13. Switch tap **ED** in position **0**.
14. Switch tap **IJ** in position **0**.
15. Switch off injector operation.
16. Lift the induction bowl.

→ Flushing water: Pump is switched off automatically.

12.2.7 Spray agent suction from containers

1. Start the drive motor on the machine and secure the machine against accidentally driving off.
2. Lower the induction bowl.

→ The flushing water pumps start automatically.

3. Connect Ecofill tank using Ecofill connector.
4. Switch tap **IJ** in position .
5. Function selection switch **DA** to position .
6. Switch on injector operation.

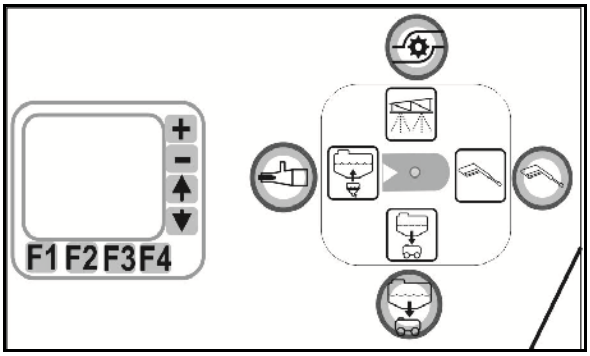

1. Switch tap **GA** in position ECO FILL .
2. Switch tap **GA** in position **0**, if the desired quantity has be drawn from the Ecofill container.

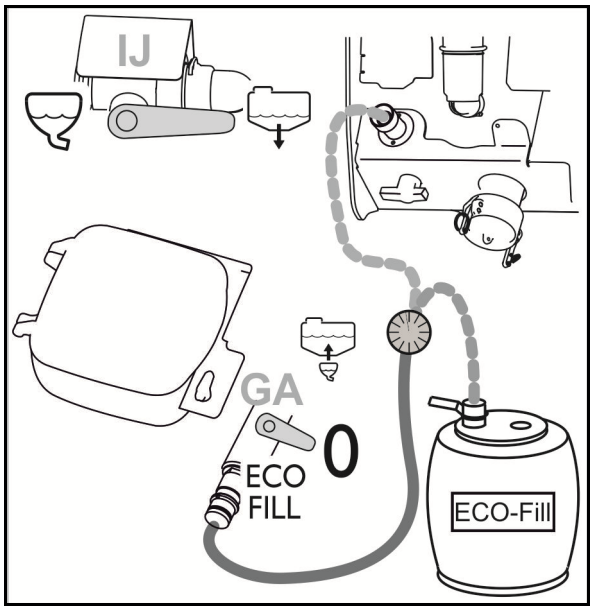

Rinsing the Ecofill dial gauge:

1. Decouple the hose from the ECOFILL container and couple it to the flushing pedestal.
2. Switch tap **GA** in position ECO FILL .

→ The counter is flushed.

3. Switch tap **GA** in position 0.
4. Switch off injector operation.
5. Switch tap **IJ** in position **0**.
6. Disconnect the counter.

12.3 Spraying operation

Special instructions for spraying operation

- Test the field sprayer by carrying out calibration
  - o before the start of the season.
  - o in the case of deviations between the actual indicated spray pressure and the spray pressure prescribed in the spray table.
- Before starting spraying, determine the exact spray rate required, referring to the instructions of the crop protection agent manufacturer.

→ Before you start spraying, enter the required spray rate (target rate) in control terminal.

- During spraying operation, precisely adhere to the required spray rate [l/ha]
  - o in order to achieve the best possible results from your crop protection measure.
  - o to avoid unnecessary pollution of the environment.
- Select the required nozzle type from the spray table before spraying starts, taking account of
  - o the intended operational speed,
  - o the required spray rate and
  - o the required atomisation characteristic (fine, medium or coarse-dropped) of the crop protection agent used for the crop protection measure.

→ Refer to the section "Spray tables for flat-fan, anti-drift, injector and airmix nozzles", Seite 285.

- Select the required nozzle size from the spray table before spraying starts, taking account of
  - o the intended operational speed,
  - o the required spray rate and
  - o the target spray pressure.

→ Refer to the section "Spray tables for flat-fan, anti-drift, injector and airmix nozzles", Seite 285.

- Select a low operational speed and a low spray pressure to prevent wastage from drifting.

→ Refer to the section "Spray tables for flat-fan, anti-drift, injector and airmix nozzles", Seite 285.

- At wind speeds of 3 m/s, take additional drift reduction measures (refer to the section "Measures for drift reduction", page Seite 190.

- Refrain from use if average wind speeds top 5 m/s (leaves and thin twigs move).
- Only switch the sprayer boom on and off during travel to avoid the application of excessive doses.
- Avoid the application of excessive doses through overlapping caused by imprecise bout tracking from one spray path to the next and/or when cornering on the headland with the sprayer boom switched on.
- During spraying operation, constantly check actual spray liquid consumption with reference to the area treated.
- Calibrate the flow meter if there are any differences between the actual and displayed spray rate.
- Calibrate the distance sensor (pulses per 100 m) if there are differences between the actual distance covered, and that displayed.
  See control terminal instruction manual.
- If spraying operation is interrupted due to bad weather, clean the suction filter, the pump, the valve chest and the spray lines. See page 205.

- Spray pressure and nozzle size influence drop size and the volume of liquid sprayed. The higher the spray pressure, the smaller the droplet diameter of the spray liquid. The smaller droplets are subject to increased, undesirable drifting.

- The agitator normally remains switched on from filling to the end of spraying operation. On this account, the instructions of the agent manufacturer are decisive.
- If there is a sudden significant drop-off in spray pressure, the spray liquid tank is empty.
- If the spray pressure drops off while conditions remain otherwise unaltered, the suction or pressure filter are blocked.

12.3.1 Applying the spray liquid

Example:

Required spray rate:	200 l/ha
Intended operational speed:	8 km/h
Nozzle type:	LU/XR
Nozzle size:	'03'
Permissible pressure range for the spraying nozzle when fitted	min. pressure 3 bar max. pressure 8 bar
Target spray pressure:	3.7 bar
Permissible spray pressure: 3.7 bar ±25 %	min. 2.8 bar and max. 4.6 bar

1. Prepare and stir the spray liquid correctly in accordance with the instructions from the crop protection product manufacturer.
2. Function selection switch **DA** to position .
3. Control suction valve chest **SA** in position ; if necessary, actuate F3 on the control terminal.
4. Set the agitator capacity with switch tap **RW**.

> In order to achieve the maximum application rate, switch off the additional agitator, position **0**.

> The main agitator is automatically controlled depending on the filling level.

5. AmaDrive: If necessary, switch on the pumps and drive at the pump operating speed.

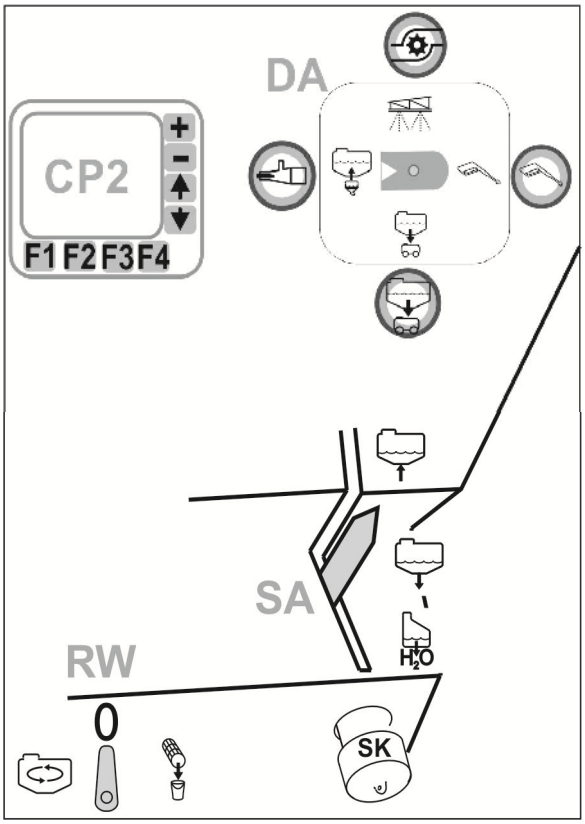

6. Switch on the control terminal.

→ Operate the field sprayer through the Work menu.

7. Fold out the sprayer boom.

8. Switch on the boom ride

or

Control the boom manually.

9. Drive the pump at the pump operating speed.

At low application rates, the pump speed can be reduced to save energy.

10.

Switch on spraying operation through the control terminal.

ISOBUS Main menu

ISOBUS Work menu

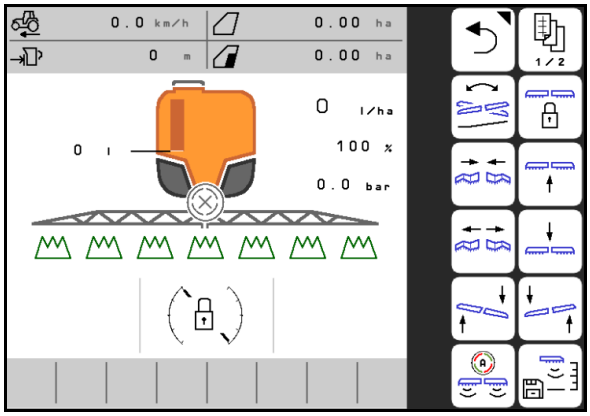

Driving to the field with the agitator switched on

1. Switch off spraying.
2. Switch on the PTO shaft.
3. Control terminal: Select the desired intensity for the agitator.

ISOBUS Main menu

12.3.2 Drift reduction measures

- Reschedule treatment for the early morning or the evening hours (there is generally less wind).
- Choose larger nozzles and a higher water spray rate.
- Precisely maintain the working height of the boom, because the risk of drifting rises very sharply as the distance between the nozzles increases.
- Reduce forward speed (to less than 8 km/h).
- Use so-called anti-drift (AD) nozzles or injector (ID) nozzles (nozzles which produce a high proportion of coarse drops).
- Observe the distance requirements of the respective crop protection agent

12.3.3 Dilute the spray liquid with rinsing water

The spray agent can be diluted for 2 reasons:

- To get rid of excess residual quantities.

  Excess residual quantities in the spray liquid tank are initially diluted with 10 times the quantity of flushing water to then spray them over the field which has already been sprayed.

- Increase the stock of spray liquid to treat a remaining area.

When spreading residue, observe the maximum permissible application quantity of the agent on areas already treated.

The spraying agent is diluted with the easy-to-use controls on the control terminal.

→ → Dilute

The spray line is flushed on machines with nozzle control. When restarting the spraying, two to five minutes will elapse until the spraying agent can be spread.

When diluting, flushing water is pumped into the spray liquid tank.

1. Control terminal: ON/OFF Switch of spraying.
2. AMADRIVE: select dilution.
3. +, − Enter the water quantity for diluting.

   The amount of water for diluting (blue) is displayed compared with the existing flushing water quantity (green).
4. Start Start dilution.

→ The dilution stops automatically.

5.

Treat the remaining area,

   or respectively

   Apply out the excess residues on the surfaces already treated. Keep applying the diluted residues until air escapes from the nozzles.

6. Control terminal:

Switch of spraying.
7. Cleaning the field sprayer.

12.4 Residual amounts

There are three types of residue:

- excessive residue remaining in the spray liquid tank when the spraying operation is finished

→ This excessive residue is discharged diluted or pumped-out and disposed of.

- the technical residue that remains in the spray liquid tank, the suction chest and the spray line when the spray pressure drops off by 25%

  The suction chest is composed of the suction filter, pump and pressure controller sub-assemblies. Observe the values for the technical residues given.

→ This technical residue is discharged diluted onto the field while cleaning the field sprayer.

- The final residue that remains in the spray liquid tank, the suction chest and the spray line after being cleaned with air discharge from the nozzles.

→ This final diluted residue is drained off after cleaning.

12.4.1 Disposing of the residues

- Make sure that the residue in the spray line continues to be sprayed in an undiluted concentration. Always spray this residue on an untreated area. The distance needed to use up this undiluted residue can be found in the section "Technical Data - spray lines", page **51**. The residue contained in the spray line is dependent on the sprayer boom working width.
- Switch on the agitator for spraying the spray liquid tank empty when the residue in the spray liquid tank is only 5% of the nominal volume.With the agitator switched on, the technical residue increases in comparison to the specified values.

o Dispose of the collected spray liquid residue in accordance with the corresponding legal guidelines. Collect the spray liquid residues in suitable containers. Allow the residual quantities of spray liquid to dry on. Dispose of the residual quantities of spray liquid in the correct waste disposal.

Formula for calculating the required distance in [m] for spraying out the undiluted residue in the spray line:

$$\textbf{Required distance [m]} = \frac{\textbf{Undiluted residue [l] x 10,000 [m}^2\textbf{/ha]}}{\textbf{Spray rate [l/ha] x working width [m]}}$$

12.4.2 Emptying the spray liquid tank using the pump

1. Couple an emptying hose (2-inch camlock coupling) to Emptying EP.
2. Switch on pumps.
3. Function selection switch **DA** to position .
4. Press the button (stop until valve has opened).

→ The spray liquid tank will be emptied.

After emptying:

5. Switch off pump.
6. Function selection switch **DA** to position .
7. Uncouple the hose.

The hose is still filled with spray liquid.

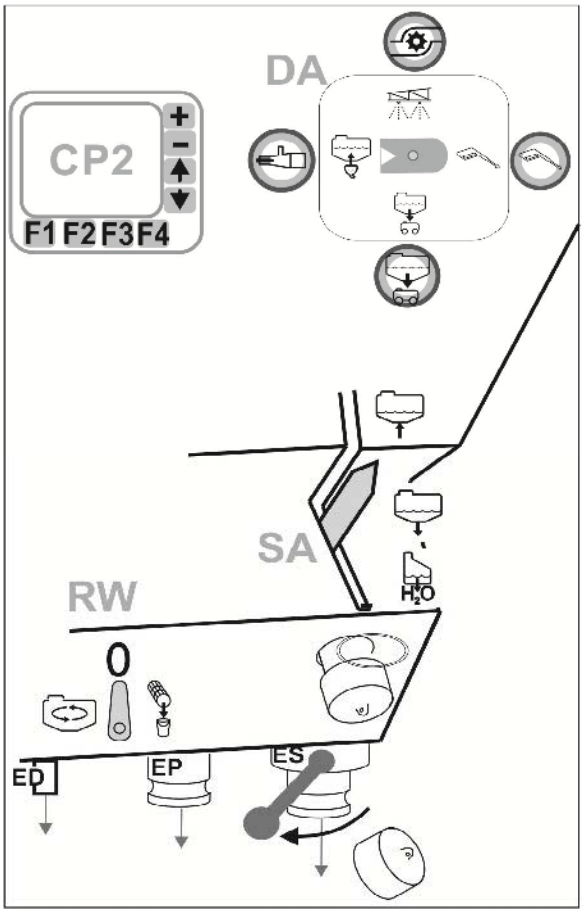

To interrupt the emptying process:

Set the function selector to Spraying.

12.5 Cleaning the implement after operation

- Keep the exposure time as short as possible, for example by daily cleaning of the utensils after the spraying operation is completed. Do not leave the spray liquid in the spray liquid tank for an excessively long period, e.g. overnight.

  The service life and reliability of the field sprayer mainly depend on how long the materials of the field sprayer are exposed to the crop protection agent.
- Clean the field sprayer thoroughly before applying a different crop protection agent.
- Carry out the cleaning process on the field where you last carried out the treatment.
- Carry out the cleaning process using water from the flushing water tank.
- You can carry out the cleaning process in the courtyard if you have a collecting facility installed (e.g. a Biobed).

  Observe all national regulations involved.
- When spreading residues on areas already treated, observe the maximum permissible spray rate of the agents.

12.5.1 Cleaning the sprayer with the tank empty

- Clean the spray liquid tank directly after spraying!
- The flushing water tank must be completely filled.

Comfort cleaning

Comfort cleaning is carried out with the convenient control on the AMADRIVE.

→ → Comfort cleaning

When running the comfort cleaning, the complete machine is cleaned in several sections.

- The machine must be in working position.

→ The spreading of diluted spray liquid / cleaning water is carried out automatically during the comfort cleaning.

- The flushing water tank must be filled with at least 150 litres of water.

Prerequisites:

- Fill level of the tank < 1 percent (tank as empty as possible).
- Function selection switch **DA** to position .
- Pumps are running.

1. AmaDrive: Select Comfort cleaning.
2. Select water quantity for Comfort cleaning (at least 150 l).
3. Start Start the Comfort cleaning.

- Automatically spray until empty.

→ Drive onto the treated area.

- The part-section valves automatically open and close (7 times → 63 seconds)
- Automatic filling (half the quantity of rinsing water)
- Automatic cleaning of tanks and pumps
- Circulating.

After 30 seconds, the message appears:

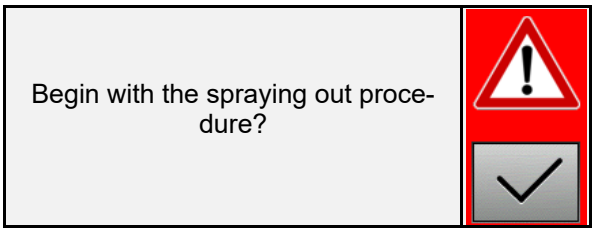

4. If necessary, add the cleaning agent through the tank cover or the induction bowl.

Flushing water is available in the induction bowl.

5. ✔ Confirm the message.

- Automatically spray until empty.

→ Drive onto the treated area.

- The part-section valves automatically open and close (7 times → 63 seconds)
- Automatic filling (half the quantity of rinsing water)

→ The part-section valves remain open.

- Automatic cleaning of tanks and pumps
- The part-section valves automatically open and close (7 times → 63 seconds)

6. Drain the final residue, see page 198.
7. Cleaning the suction filter and pressure filter, see page 201, 202.

Standard cleaning

- The spray liquid tank must be empty!
- 160 litres of flushing water are required.
- Agitator and tank are cleaned.

1. Start Starting the standard cleaning.

→ 160 litres of cleaning water remain in the spray liquid tank and can be spread.

2. Spray the content of the spray liquid tank to the area already treated.

12.5.2 Draining the final residue

- On the field: Spread the final residues over the field.
- In the courtyard:
  - o Place a suitable collecting container under the drain opening of the suction chest and the drain hose for the pressure filter and collect the final residues.
  - o Dispose of the collected spray liquid residue in accordance with the corresponding legal guidelines.
  - o Collect the spray liquid residues in suitable containers.

1. Switch off the pump.
2. Switch tap **RW** in position .
3. Remove the cap from Emptying **ES**.
4. Open the Emptying **ES** stop tap.

→ Drain the final residual quantity via Emptying **ED** and **ES**.

5. Close the Emptying **ES** stop tap again.
6. Put the cap on Emptying **ES**.
7. Switch tap **RW** in position .

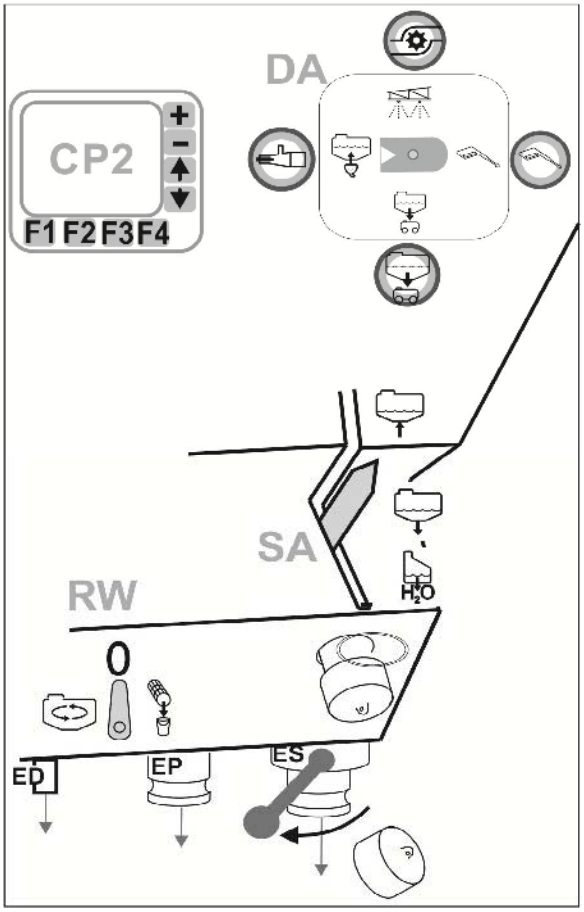

12.5.3 XtremeClean high-pressure cleaning

- Execute XtremeClean via the ISOBUS control terminal.
- XtremeClean is high-pressure cleaning of the spray liquid tank.
- XtremeClean serves to loosen deposits on the tank interior wall and must be used particularly before a critical agent change.
- Execute XtremeClean after intensive cleaning.
- Perform XtremeClean on the farmyard.
- During the procedure, the cleaning water must be applied in several steps.

Duration of the entire procedure: 25 minutes

Duration of high-pressure cleaning of the spray liquid tank: at least 15 minutes / until it is stopped manually.

Water consumption: 560 litres

1. Run the pump.
2. Control terminal: Select XtremeClean.

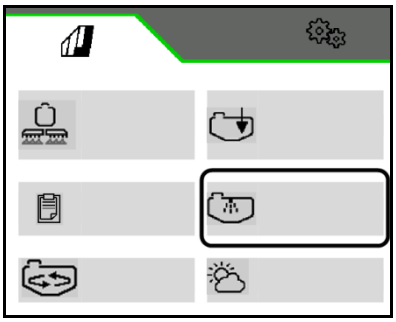

3. > Start cleaning when the conditions are fulfilled.

The following conditions must be fulfilled:

☑ Maximum fill level of the spray liquid tank is lower than 1%

☑ Minimum fill level of the spray liquid tank

☑ Boom is unfolded

☑ Spray liquid pump speed > 500 rpm

The cleaning steps are shown in the diagram!

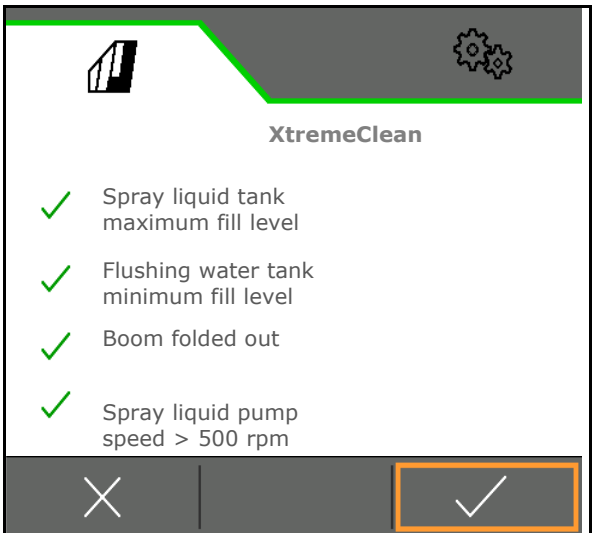

4. Apply the cleaning water in an environmentally friendly manner.

→ Cleaning phase 1

5. Apply the cleaning water in an environmentally friendly manner.

   ✓ Start application

→ Cleaning phase 2

6. Flush in cleaning agent if necessary, see page 184

7. High-pressure cleaning starts.

   ✓ Stop high-pressure cleaning.
   The high-pressure cleaning takes at least 15 minutes.

   x Abort the high-pressure cleaning prematurely, the spray liquid tank is filled with cleaning water.

8. Apply the cleaning water in an environmentally friendly manner.

   ✓ Start application.

→ Cleaning phase 3

9. Apply the cleaning water in an environmentally friendly manner.

   ✓ Start application.

10. ✓ Cleaning is complete.

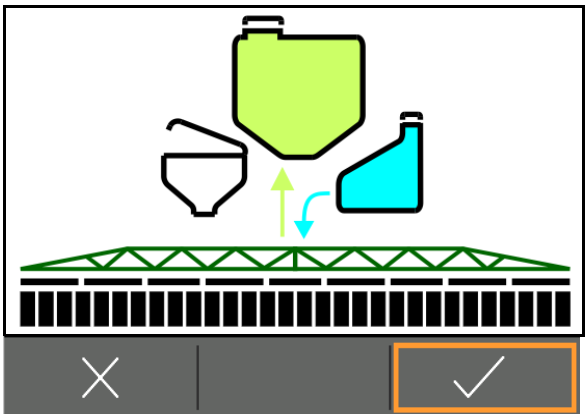

12.5.4 Cleaning the suction filter

- Clean the suction filter on a daily basis after cleaning the field sprayer.
- Grease the O-rings.
  Make sure that the O-ring seals are correctly fitted.
- Ensure that there are no leaks after installation.
- HighFlow: Also clean the separate HighFlow pressure filter.

(1) Suction filter

(2) Relief valve

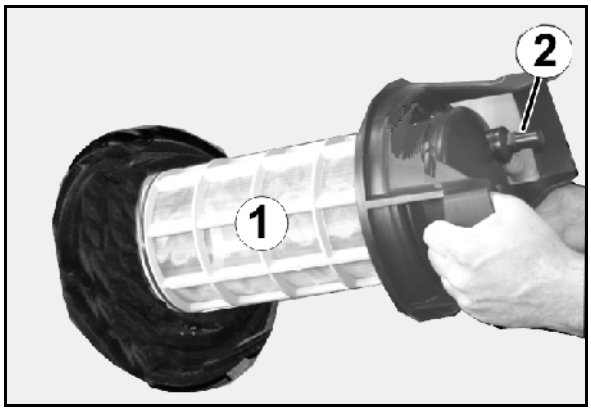

Cleaning the suction filter when tank is full

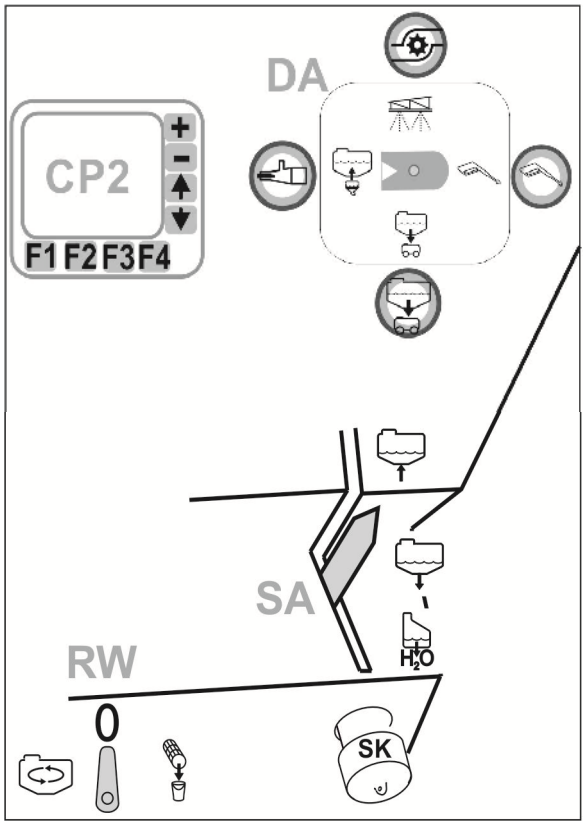

1. If necessary, switch on the pumps and run at the pump operating speed.
2. Put the sealing cap on Suction coupling SK.
3. Function selection switch **DA** in position .
4. F2 Filling terminal: Select filling of the spray liquid tank.

→ Enter a target quantity that is increased by at least 200 litres.

5. Release the cover of the suction filter.
6. Actuate the relief valve on the suction filter.

→ The contents of the filter cup are sucked out.

7. Remove the cover with suction filter and clean using water.
8. Reassemble the suction filter in the reverse sequence.
9. Check the filter cover for leaks.
10. Switch off pump.
11. Function selection switch **DA** in position .

12.5.5 Cleaning the pressure filter

Cleaning the pressure filter when the tank is empty

1. Undo the sleeve nuts.
2. Remove the pressure filter (1) and clean with water.
3. Refill the pressure filter.
4. Check the screw connection for leaks.

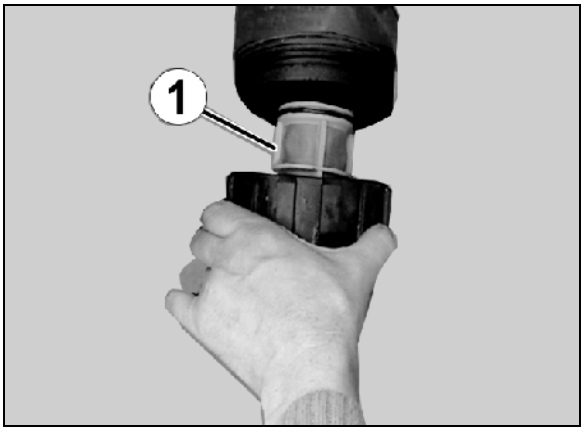

Cleaning the pressure filter when the tank is full

WARNING
Unwanted emptying of the spray liquid tank via quick emptying!

Never run the pump.

HighFlow: Do not clean the separate HighFlow pressure filter when the spray liquid tank is full.

Single nozzle control:
Close the return flow stop tap on the sprayer boom (Position 0).

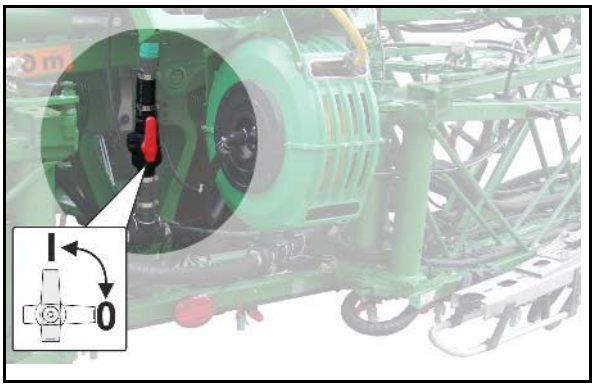

1. Function selection switch **DA** in position .
2. Place a collecting bucket under the outlet.
3. Switch tap **RW** in position .

→ Drain the residual quantity in the pressure filter via Emptying ED.

4. Undo the union nut.
5. Remove the pressure filter and clean with water.
6. Refill the pressure filter.
7. Check the screw connection for leaks.
8. Afterwards, put the control elements back to their initial position.

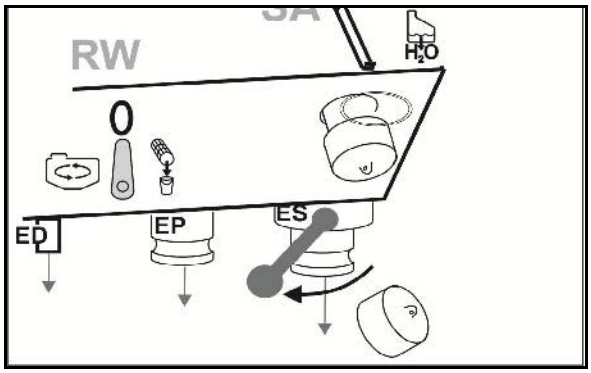

12.5.6 Exterior cleaning

1. Switch on the pumps, if necessary.
2. Function selection switch **DA** to position
3. Actuate the button.
4. Clean the field sprayer and the sprayer boom with the spray gun.
5. Actuate the button.

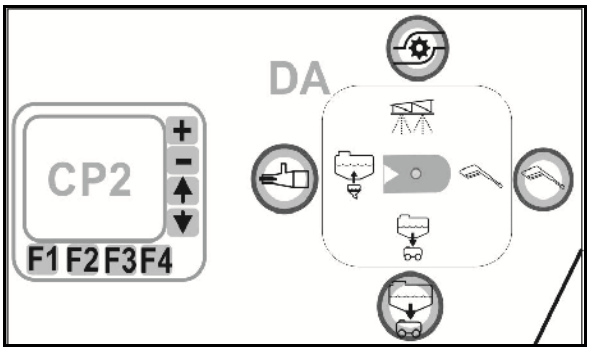

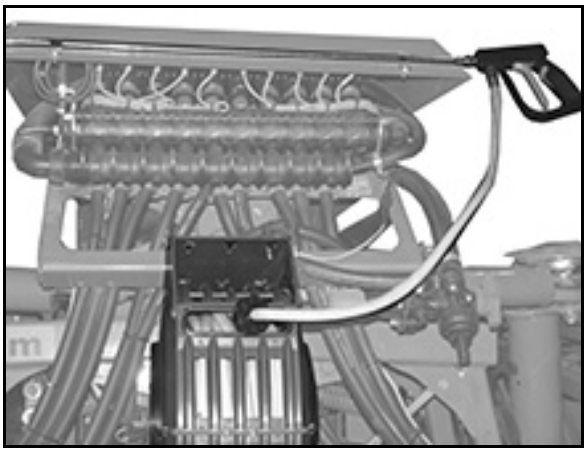

12.5.7 Cleaning the sprayer during a critical agent change

1. Clean the sprayer in three runs as always, see page 196
2. Fill up flushing water tank.
3. Clean the sprayer, two runs, see page 196.
4. If the sprayer has been previously filled via the pressure connector:

   Clean the induction bowl with the spray gun and evacuate the contents of the induction bowl.
5. Drain the final residue, see page 198.
6. By all means, clean the suction filter and pressure filter, see page 201, 202.
7. Clean the sprayer, one run, see page 196.
8. Drain the final residue, see page 198.

12.5.8 Contact of the implement with liquid fertiliser

Liquid fertiliser that spills or escapes causes corrosion damage to the implement, in particular to the engine and surrounding assemblies.

Clean points thoroughly with clear fresh water!

12.5.9 Flushing the sprayer boom when the spray liquid tank is full

(work interruption

- If spraying operations must be interrupted because of bad weather, it is important to clean the suction chest (suction filter, pumps, pressure controller) and the spray line.
- Flushing is controlled using the intuitive controls on the control terminal.

→ → Flushing

1. Run the pump.
2. , Enter the water quantity for flushing.

The amount of water for flushing (blue) is displayed compared with the existing flushing water quantity (green).

3. + Start flushing and switch on the sprayer at the same time.

   Spread the spray liquid until water runs out of the nozzles.

Spread at least 50 litres of flushing water while driving on an untreated area.

DUS:

For this purpose, use two litres of flushing water for each working width meter.

Switch the sprayer on temporarily only as the spray liquid concentration is reduced via the DUS.

4. + Stop flushing.
5. DUS: Switch the pump off immediately as the agent concentration reduces.

- **Tanks, agitators are not clean!**

Continuing the spraying operation

1. Run the pump.
2. Control terminal: switch on maximum agitation for at least 5 minutes.

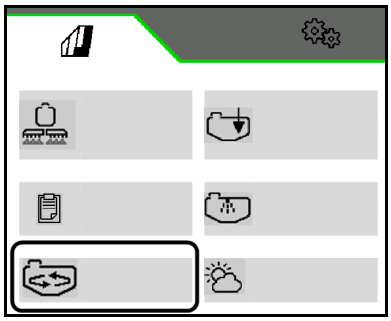

13 Faults

WARNING

Risk of crushing, shearing, cutting, being caught and/or drawn in, or impact through

- **unintentional falling of raised, unsecured machine parts.**
- **unintentional start-up and rolling.**

Secure the machine against unintentional start-up and rolling before eliminating faults on the machine. See page 164.

Wait for the machine to stop before entering the machine danger area.

13.1 Towing, salvaging, evacuating the machine

DANGER

Risk of accident when towing the machine when the machine cannot be controlled.

Towing the implement on public roads is forbidden.

WARNING

Damage to the machine caused by pulling out the machine when it is stuck on the field.

It is forbidden to pull out the machine using the emergency drawbar when it is stuck

The user is responsible for any resulting damage!

Preparing the machine for salvaging and evacuation

DANGER

Risk of injury or even death due to unintentional movement of the machine.

The machine may only be prepared for towing when on level ground as the wheels can turn freely and the brake is not working.

1. Install the emergency drawbar.
2. Remove the reduction shafts on the wheels.

The emergency drawbar (optional) only serves to

- evacuate the defective machine from road traffic.
- load the machine on a low-bed trailer.

Installing the emergency drawbar (optional):

Install the emergency drawbar at the front under the machine.

(1) Emergency drawbar

(2) Pins for mounting the emergency drawbar, secured using 2 bolts.

(3) Pins for attaching the towing bar, or pull rope secured with bolts.

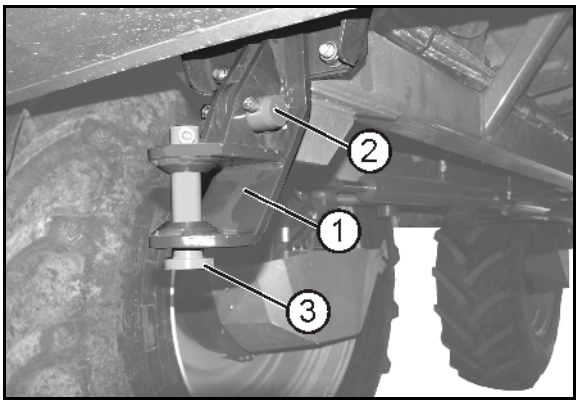

Fig. 5

Removing the reduction shaft on all wheels:

1. Remove the central screw connection.
2. Use an M6 bolt to pull the reduction shaft out of the wheel gear.
3. Tighten the screw connection again to 90 Nm.
4. After towing, fit the reduction shaft again.

- Mount the towing device (option).
- In event of engine failure and / or hydraulic malfunction, there will be no oil pressure for steering system. Thus, steering will be very difficult.
- Maximum speed when towing: 5 km/h.
- Empty the spray liquid tank before towing.
- If the engine has stopped, the machine must be towed away using a drawbar in all cases.

13.2 AMADRIVE faults and warning messages

Designation	Sensor type	Control device	Warning message! Fault entry PIN
ESB above	Switch	MMC1	! - Induction bowl is not above
Automatic steering	Switch	MMC2	
Brake circuit air pressure 1	Switch	MMC2	Supply pressure too low
Brake circuit air pressure 2	Switch	MMC2	Supply pressure too low
Hydraulic oil filter	Switch	MMC2	! - Hydraulic oil filter polluted
Hydraulic oil temperature	Switch	MMC2	! - Hydraulic oil temp high
Low hydraulic oil level	Switch	MMC2	! - Hydraulic oil level low
Central lubrication fault	Switch	MMC2	! - Central lube system error
Handbrake switch	Switch	MMC2	! - Parking brake
Driving lever	potentiometer	MMC1	AE Pin 38
Lift module	potentiometer	MMC1	AE Pin 40
Front steering system	potentiometer	MMC2	AE Pin 38
Rear steering system	potentiometer	MMC2	AE Pin 39
Level at the front	potentiometer	MMC2	AE Pin 42
Level at the rear	potentiometer	MMC2	AE Pin 43
Track, left side	potentiometer	MMC2	AE Pin 40
Track, right side	potentiometer	MMC2	AE Pin 41
Stairs	potentiometer	MMC2	AE Pin 5
Diesel	potentiometer	MMC2	AE Pin 4
Hydraulic system temperature	Temperature sensor	MMC2	AE Pin 45
Water temperature	Temperature sensor	MMC2	AE Pin 44
Drive control, forwards	Pressure sensor	MMC1	AE Pin 44
Drive control, backwards	Pressure sensor	MMC1	AE Pin 45
Speed, front left	Speed sensor	MMC1	FQ Pin 62
Speed, front right	Speed sensor	MMC1	FQ Pin 63
Speed, rear right	Speed sensor	MMC1	FQ Pin 64
Speed, rear left	Speed sensor	MMC1	FQ Pin 65

Designation	Valve type	SG	Fault entry PIN
Pump forwards	Proportional valve	MMC1	PV Pin 6
Pump, backwards	Proportional valve	MMC1	PV Pin 7
Motor, front left	Proportional valve	MMC1	PV Pin 8
Motor, front right	Proportional valve	MMC1	PV Pin 9
Motor, rear left	Proportional valve	MMC1	PV Pin 11
Motor, rear right	Proportional valve	MMC1	PV Pin 10
Spraying pump motor	Proportional valve	MMC1	PV Pin 12
Retarder brake	Proportional valve	MMC1	PV Pin 13
El. ABV	Proportional valve	MMC2	PV Pin 10
Steering, left side	Proportional valve	MMC2	PV Pin 6
Steering, right side	Proportional valve	MMC2	PV Pin 7
Fan motor, water	Proportional valve	MMC2	PV Pin 8
Fan motor, oil / air	Proportional valve	MMC2	PV Pin 9
Increase left track width	Switching valve	MMC2	SA Pin 14
Reduce left track width	Switching valve	MMC2	SA Pin 15
Increase right track width	Switching valve	MMC2	SA Pin 16
Reduce right track width	Switching valve	MMC2	SA Pin 17
Lift level, front	Switching valve	MMC2	SA Pin 18
Lower level, front	Switching valve	MMC2	SA Pin 19
Lift level, rear	Switching valve	MMC2	SA Pin 20
Lower level, rear	Switching valve	MMC2	SA Pin 21

13.3 Malfunctions during spraying operation

Fault	Cause	Remedy
There is no suction from the pump	Blockage on the suction side (suction filter, filter insert, suction hose).	Remove the blockage.
	Pump is sucking in air.	Check the hose connection of the suction hose (optional) on the suction port for leak tightness.
The pump does not have any power	Suction filter and filter insert dirty.	Clean suction filter and filter insert.
	The valves are jammed or damaged.	Change the valves.
	Pump is sucking in air, recognisable from the air bubbles in the spray liquid tank.	Check the hose connections on the suction hose for leak tightness.
The spray cone vibrates	Irregular delivery flow from the pump.	Check, and if necessary replace, the suction and pressure-side valves (see Seite 255).
Oil/spray liquid mixture in the oil filler neck or clearly visible consumption of the oil	Pump diaphragm defective.	Change all six piston diaphragms (see 256).
Control terminal: **The required spray rate entered is not achieved**	High operational speed; low pump drive speed;	Reduce the operational speed and increase the pump drive speed until the fault message disappears and the audible alarm signal stops
Control terminal : **There has been a deviation from the permissible spray pressure range for the nozzle fitted to the sprayer boom**	Deviation from the prescribed operational speed, which has an effect on the spray pressure	Alter your operational speed to return to the prescribed operational speed range set for spraying operation

14 Cleaning, maintenance and repair

WARNING

Risk of crushing, shearing, cutting, being caught and/or drawn in, or impact through

- **unintentional falling of raised, unsecured machine parts.**
- **unintentional start-up and rolling of the tractor-machine combination.**

Secure the tractor and machine against unintentional start-up and rolling, before carrying out cleaning, maintenance or repair work on the machine; see page 164.

WARNING

Risk of crushing, shearing, cutting, being caught and/or drawn in, or impact through unprotected danger points.

- Mount protective equipment removed when cleaning, maintaining and repairing the machine.
- Replace defective protective equipment with new equipment.

DANGER

- **When carrying out maintenance and repair, observe the safety instructions, particularly "Field sprayer operation" section, Seite 33.**
- **You may only carry out maintenance or repair work under moving machine parts that are in a raised position if such parts are secured with suitable, positive-fit locking devices against accidental lowering.**

- Regular and proper maintenance will keep your trailed sprayer in good condition for a long time, and will prevent early signs of wear. Regular and proper maintenance is a requirement of our warranty conditions.
- Use only genuine AMAZONE spare parts (see "Spare and wear parts and aids" section, page 17).
- Use only genuine AMAZONE replacement hoses, and hose clamps made of V2A for assembly.
- Specialist knowledge is the requirement for carrying out testing and maintenance operations. This specialist knowledge is not given here in this operating manual.
- Observe environmental protection measures when carrying out cleaning and maintenance work.
- Observe legal requirements when disposing of lubricants, e.g. oils and grease. Also affected by these legal requirements are parts that come into contact with these lubricants.
- Do not exceed a greasing pressure of 400 bar when greasing with high pressure grease guns.
- The following are prohibited:
  - drilling the running gear.
  - drilling through pre-existing holes on the transport frame.
  - welding load-bearing components.
- Protective measures are necessary, such as covering lines or extending lines in particularly critical locations
  - during welding, drilling and grinding work.
  - when working with cut-off wheels near plastic wires and electric wires.
- Clean the field sprayer thoroughly with water before carrying out repair work.
- Carry out repair work on the field sprayer with the pump switched off.
- Thorough cleaning must be carried out before repair work can be carried out inside the spray liquid tank. Keep out of the spray liquid tank.

During welding work on the machine.

- Always separate the power supply to the on-board computer.
- Turn off the main switch.
- Disconnect the battery cable.
- Disconnect the EMR plug (Fig. 148/1) from the controller in the central electrics in the cabin on the right side under the armrest next to the cabin.

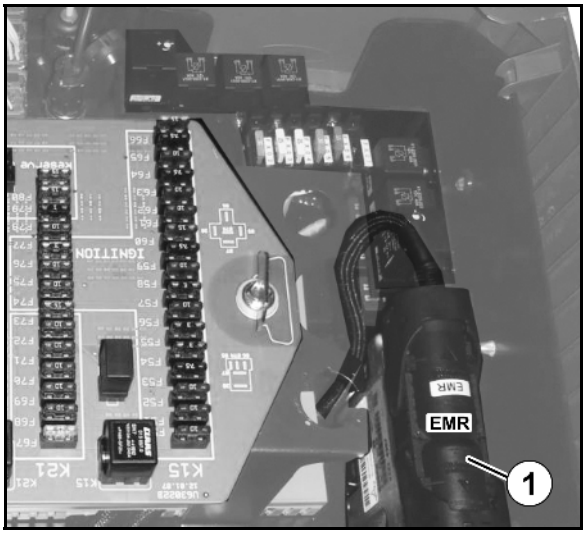

Fig. 6

14.1 Cleaning

- Monitor brake, air and hydraulic hose lines particularly carefully
- Never treat brake, air and hydraulic hoses with petrol, benzene, petroleum or mineral oils.
- After cleaning, grease the machine, in particular after cleaning with a high pressure cleaner/steam jet or liposoluble agents.
- Observe the statutory requirements for the handling and removal of cleaning agents.

Cleaning with a pressure washer / steam jet

- Always observe the following points when using a pressure washer / steam jet for cleaning:
  - Do not clean any electrical components.
  - Do not clean any chrome-plated components.
  - o Never aim the cleaning jet of the cleaning nozzle of the high pressure cleaner/steam jet directly at lubrication points, bearings, rating plates, warning signs, and stickers.
  - Always maintain a minimum jet distance of 300 mm between the high pressure or steam jet cleaning nozzle and the machine
  - The set pressure of the high-pressure cleaner / steam jet must not exceed 120 bar.
  - Comply with the safety regulations when working with high pressure cleaners.

14.2 Winter storage and long periods out of operation

Spraying technology

For winter storage, the remaining water / spray liquid is diluted in the entire liquid circuit with a sufficient amount of antifreeze to prevent frost damage.

80 l of antifreeze are required.

AMAZONE recommends wintering with a propylene glycol-based antifreeze (e.g. Glysofor L).

Liquid fertiliser is not suitable as frost protection and can damage the implement.

- Thoroughly clean the implement before winter storage.
  - Perform intensive cleaning on the control terminal when the tank is empty.
  - Activate draining of the final residual quantity during the intensive cleaning.

1. Clean the implement and empty it completely.
2. Start the drive motor on the machine and secure the machine against accidentally driving off.

Fill antifreeze into the flushing water tank:

3. Connect the suction hose to the suction connection.
4. Fill the flushing water tank with the Twin-Terminal CP2.

Pump antifreeze into the spray liquid tank through the suction hose:

5. Switch on pumps.
6. Function selection switch **DA** in position .

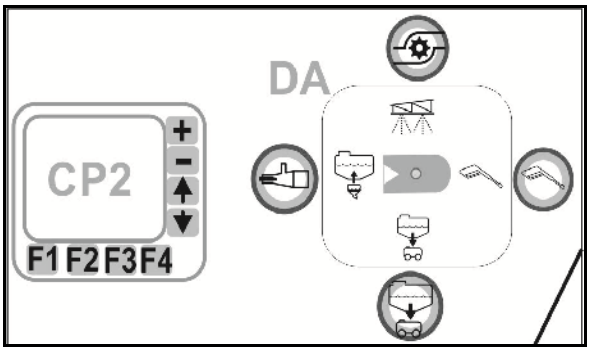

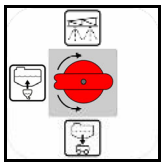 **Pump antifreeze in the entire liquid circuit:**

7. Function selection switch **DA** in position and switch on injector operation .

   Change the positions of switch taps **EB** on the induction bowl, actuate the corresponding functions for 10 seconds and evacuate the content.

8. Function selection switch **DA** in position .

   Spray the external cleaning for 60 seconds into the induction bowl.

9. Function selection switch **DA** in position .

   Suction from induction bowl.

10. Function selection switch **DA** in position and switch agitator **RW** on and off at maximum capacity.

Unfold the boom.

DUS: Allow the antifreeze to circulate for 5 minutes.

11. Switch on spraying until the antifreeze emerges from the nozzles.

⚠ Collect the sprayed liquid!

⚠ Check the sprayed liquid for sufficient frost protection! If necessary, add more antifreeze and repeat the procedure.

Pump out the mixture of antifreeze and spray liquid:

12. Empty the spray liquid tank using the pump.

→ Pump the mixture into a suitable tank, re-use or dispose of properly.

13. Drain the suction filter insert and pressure filter insert.

14. Remove the hose from the pressure sensor to drain the pressure sensor.

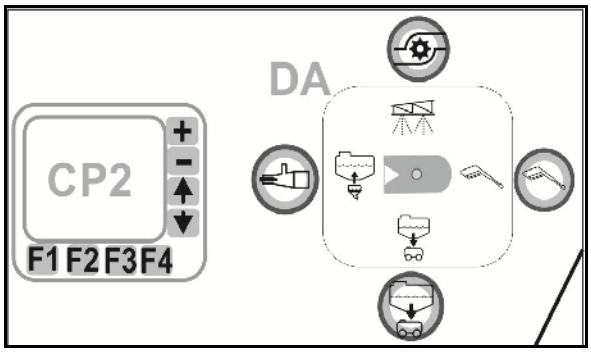

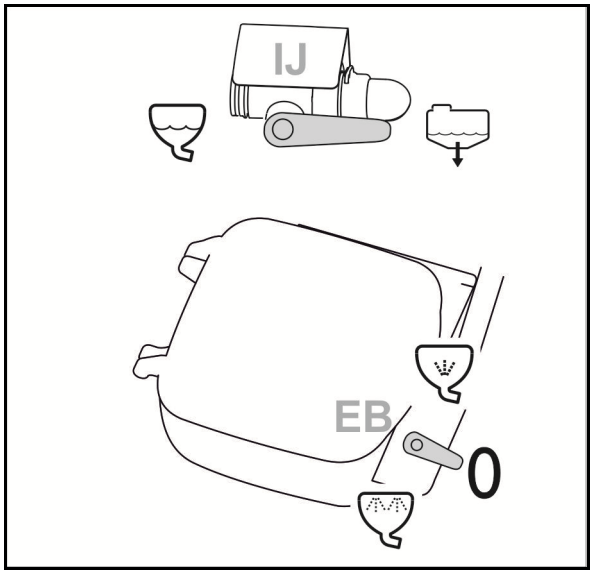

- Drain the pressure sensor of the boom valve chest with the boom lowered.

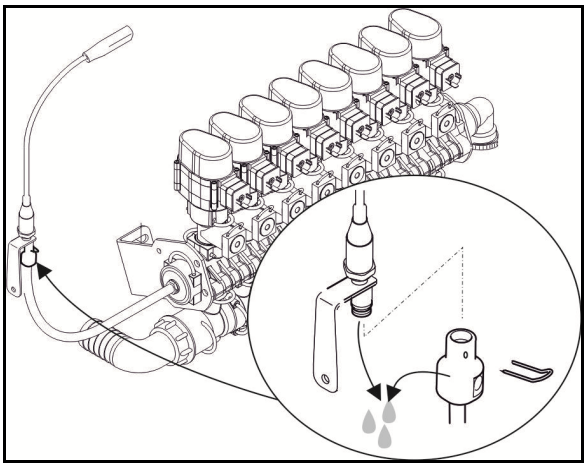

- Drain the pressure sensor on the main agitator.

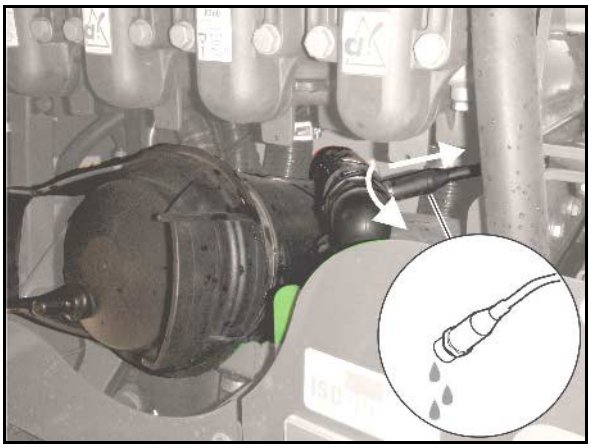

Vehicle

DEF

Decommissioning for up to 4 months:

Completely fill the DEF tank.

Decommissioning for more than 4 months:

1. Completely empty the DEF tank.
2. Refill the tank completely with new DEF.
3. Replace the filter insert of the feed pump.
4. Warm up the motor to operating temperature and than apply a load.

If an error is observed:

Switch off the motor and wait for the EDC (Electronic Diesel Control) run-on time to expire.

Repeat the procedure several times if necessary.

If the error cannot be fixed, please contact your DEUTZ partner.

14.3 Maintenance schedule

- Carry out maintenance work when the first interval is reached.
- The times, continuous services or maintenance intervals of any third party documentation shall have priority.
- Also note the maintenance sheet.

After the first working run

Component	Servicing work	see page	Work-shop work
Wheels	• Tighten wheel bolts	**230**	
Hydraulics	• Visual inspection of the hose lines for defects • Check leak tightness	**239**	
Whole machine	• Perform lubrication	**182**	

After the first 50 hours of operation:

Order the initial maintenance kit where necessary.

Component	Servicing work	see page	Work-shop work
Wheel gears	• Oil change	**229**	**X**
Control	• Check the front and rear shock absorber bearings and, where necessary, tighten the bolts.	**248**	**X**
Hydraulics	• Replace the hydraulic return filter	**243**	**X**
	• Replace the hydraulic pressure filter	**243**	**X**
Deutz engine	• Oil change	DEUTZ	**X**
	• Replace the engine oil filter		**X**

Daily

Component	Servicing work	see page	Work-shop work
Deutz engine	• Check engine oil level		
	• Check the coolant fill level		
	• Empty the air filter dust discharge valve and check the maintenance indicator		
	• Empty the water collection tank in the fuel filter		
Hydraulics	• Check the oil level	243	
	• Visual inspection of the hose lines for defects • Check leak tightness	239	
Lighting	• Check function	-	
Brakes	• Check function	-	
Steering system	• Track correction	65	
Spraying pumps	• Check the oil level	254	
Spray liquid tank	• Clean or flush	195	
Suction filter		200	
Self-cleaing pressure filter		108	
Nozzles		263	
Machine	• Visual check for leaks on all assembly groups that conduct water.	-	
Central lubrication	• Check the tank fill level	-	

Every three months / Every 100 operating hours

Component	Servicing work	See Page	Work-shop work
Spraying nozzles	• Check	263	
Compressed air system	• Draining the air reservoir	233	
Whole machine	• Perform lubrication (if there is no central lubrication)	182	
Brake	• Check brake fluid level	232	
Cab Category 4	• Filter change for activated carbon filter	246	X
Booms	• Checking the boom for cracks / beginning of crack formation		

Every six months / Every 250 operating hours

Component	Servicing work	see page	Work-shop work
Sprayer boom	• Clean the line filters • Replace damaged filter inserts	**264**	
Cab Category 4	• Filter change for dust and aerosol	**246**	

Annually / 500 operational hours (Scope of maintenance A)

→ Order the maintenance kit A where necessary

Component	Servicing work	see page	Work-shop work
Deutz engine	• Check the V-belt		**X**
	• Check the coolant additive concentration		**X**
	• Check the air intake lines for damage		**X**
	• Replace lubricant and oil filter		**X**
Wheel gears	• Check the oil level	**229**	
Hydraulics cooler, engine radiator, air conditioner	• Clean with compressed air	**194**	
Hydraulics	• Replace the hydraulic return filter	**243**	**X**

Annually / 1000 operational hours (Scope of maintenance B)

→ Order the maintenance kit B where necessary (includes maintenance kit A)

Component	Servicing work	see page	Work-shop work
	• **Carry out scope of maintenance A**		
Cab	• Replace the outer air filter • Clean the circulation filter	**245**	**X**
	• Check the front and rear shock absorber bearings and, where necessary, tighten the bolts.	**248**	X
Deutz engine	• Check the charge air cooler entry surface (lubricant, drain condensation water)		**X**
	• Check battery and cable connections		**X**
	• Check the cold start device		**X**
	• Re-tighten the motor bearing, replace if necessary		**X**
	• Check fastenings, jubilee clips, replace if necessary.		**X**
	• Check the V-belt and tension roller		**X**
	• Replace the fuel filter		**X**
	• Replace the fuel pre-filter		**X**
	• Replace the air filter		**X**
	• Replace the V-belt for the air conditioner		**X**

	• Replace the filter insert for the SCR feed pump		X
	• Motor monitoring, check the warning system		X
Hydraulic system	• Hydraulic oil change	**243**	X
Wheel gears	• Oil change	**229**	X
Spraying pumps	• Oil change	**254**	X
	• Check the vales, replace if required	**255**	X
	• Check piston diaphragm, replace if required	**256**	X
Brakes	• Check the brake linings / brake drums	**232**	X
Hydropneumatic spring suspension	• Check the pressure of the diaphragm accumulator, correct if necessary (30-45 bar when the spring suspension is lowered)		X
Sprayer boom	• Determine the volume of the field sprayer and check the lateral distribution, replace worn nozzles	**263**	
Flow meter / return flow meter	• Calibrate	**258**	
Flushing water	• Clean the flushing water suction filter		

Every 2 years / 2000 operational hours (Scope of maintenance C)

→ Order the maintenance kit C where necessary (contents maintenance kit B)

Component	Servicing work	see page	Workshop work
	• **Carry out scope of maintenance B**		
Deutz engine	• Set the valve clearance		X
	• Replace the coolant		X
	• Check and clean the charging pressure sensor		X
	• Venturi sensor and the underlying adapter plate of the exhaust gas recirculation		X
	• Differential pressure sensor of the diesel particle filter		X
Air conditioner	• Clean the evaporator and warm water radiator	**251**	X
	• Replace the filter drier	**250**	X
Brake	• Change the brake fluid		X
	• Replacing the air drier cartridge	**232**	
Fire extinguisher	• Inspection by Gloria customer services	**-**	

4000 operational hours

Component	Servicing work	see page	Workshop work
Deutz engine	• Replace the V-belt and tension roller		X

6000 operational hours

Component	Servicing work	see page	Workshop work
Deutz engine	• Replace the crank housing ventilation		X
	• Replace the coolant		X
	• Clean the turbocharger compressor inlet		X

As required

Component	Servicing work	see page	Workshop work
Deutz engine	• Replace the diesel particle filter, if a notification appears		X
	• Immediately drain the water separator of the fuel pre-filter when a notification appears		X
Hydraulic sprayer boom	• Adjust the throttle valve	**253**	
Spray liquid circuit and nozzles	• Eliminate scale deposits	**259**	
Wheels	• Tighten the wheel bolts (after the first trip after changing the wheels)	**230**	
	• Check tyre pressure	**230**	
Brakes	•- Replace brake shoes	**232**	X
Air conditioner	• Commissioning following longer standing times	**249**	
Hydraulics cooler, engine radiator, air conditioner	• Clean with compressed air	**194**	
Electro-hydraulic sprayer boom (Flex-folding)	• Functional check		

14.4 Maintenance work with the engine running

DANGER
Risk of accident during maintenance work due to the machine starting up unintentionally.

Press the S03 switch before starting maintenance.

The S003 switch

- Prevents movement when the engine is running.
- Under the foldable arm rest
- Is illuminated after being pressed.

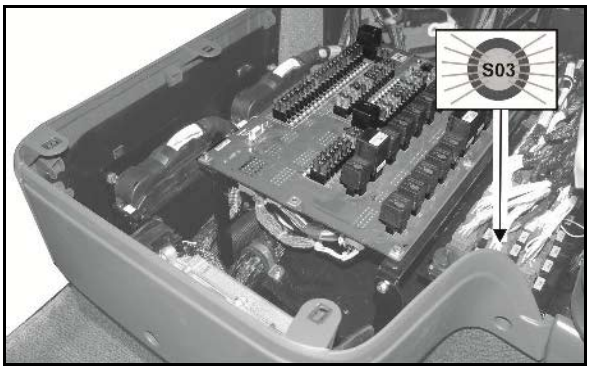

14.5 Hydro-pneumatic pressure reservoir

WARNING
Risk of injury when working on the hydraulic system with pressure reservoir.

Work on the hydraulic block and hydraulic hoses with the pressure reservoir connected may only be performed by specialist personnel.

14.6 Lubrication specifications

- After 10 operational hours, lubricate all lubrication points for the first time!
- Lubricate all grease nipples (keep gaskets clean).
- Regularly oil and lubricate all moving parts such as screws, bolts and bearings.

Lubricate / grease the machine at the specified intervals.

Lubrication points on the machine are indicated with the foil.

Carefully clean the lubrication points and grease gun before lubrication so that no dirt is pressed into the bearings. Press the dirty grease out of the bearings completely and replace it with new grease.

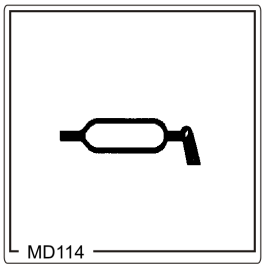

Lubricating grease

	Brand	Designation
Lithium soaped with EP additive, NLGI Class 2 (also suitable for the central lubricating system)	Agip	GR MU EP 2
	Aral	Aralub HLP 2
	Avia	Avialith 2 EP
	BP	Energrease LS 2 - EP 2
	Castrol	Spheerol AP 2
	Esso	Beacon EP 2
	Fina	Marson EPL2A
	Fuchs	Renolit FLM 2
	Shell	Alvania EP 2
	Mobil	Mobilux EP 2

Lubrication point overview

	Lubrication point	Interval [h]	Number of lubrication points	Type of lubrication
(1)	Steering cylinder	100	4 x 2	Lubricating nipple
(2)	Oscillating yoke	100	2 x 2	Lubricating nipple
(3)	Track width cylinder	100	2 x 2	Lubricating nipple
(4)	Oscillating axle	100	2 x 2	Lubricating nipple
(5)	Stub axle	100	4 x 4	Lubricating nipple
(6)	Hydropneumatic sprung suspension	100	4 x 2	Lubricating nipple
(no fig.)	Sprayer boom mount	100	4	Lubricating nipple

(7)	Track width adjustment main shaft grease with a brush corrosion protection (every 100 h and for longer standstill periods)

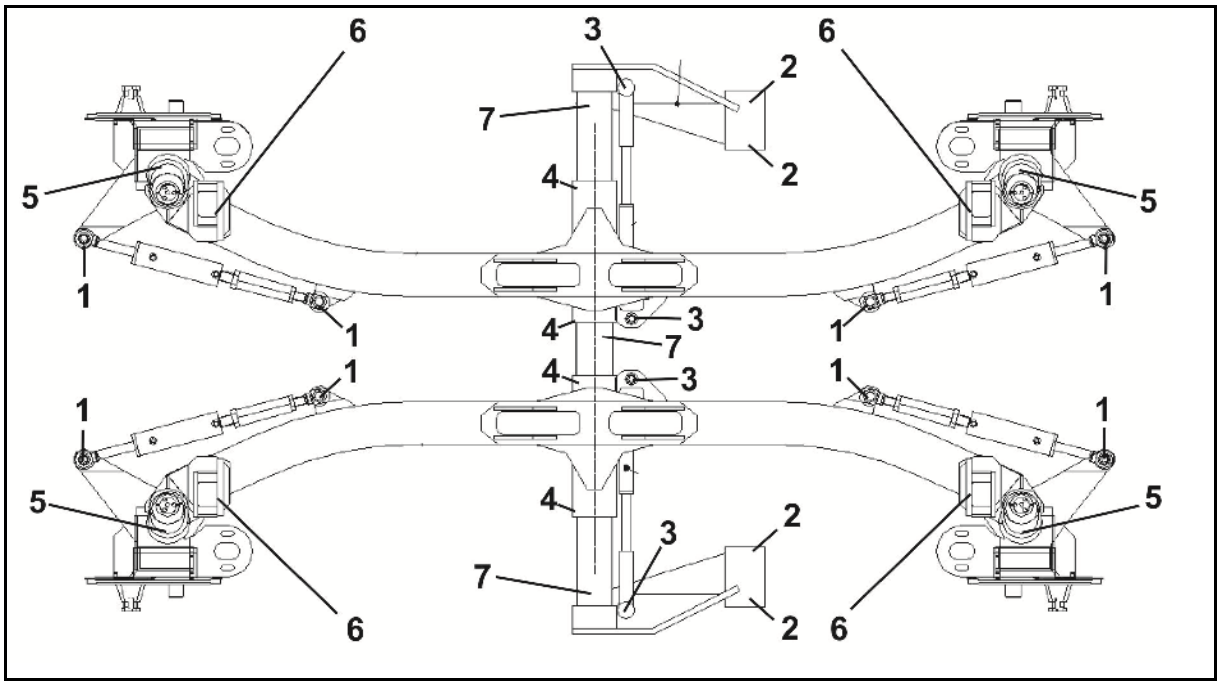

As an additional corrosion protection, run the track width to the minimum and maximum value every 20 operational hours.

14.6.1 Central lubrication

(option)

Function of the central lubrication:

- Includes all the lubrication points on the machine (56 points)
- Automatic dosage

(1) Lubricant tank

(2) Connection for refilling

(3) Maximum filling level

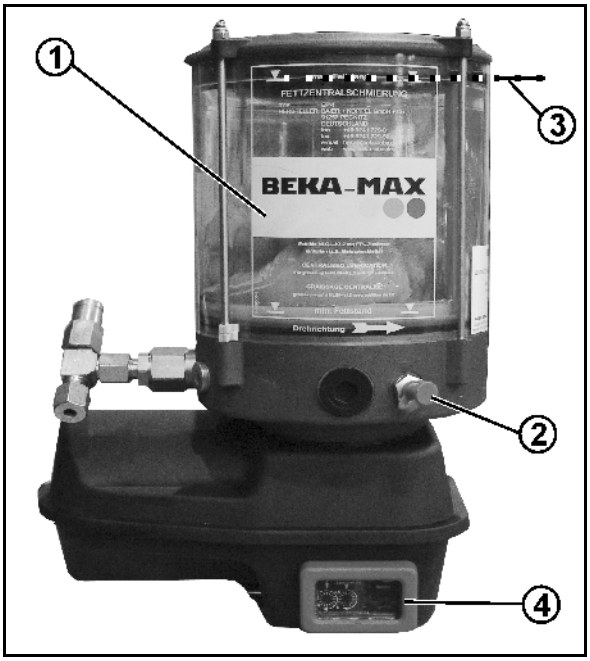

- Fill the tank of the central lubricating unit in due time.
- Operate the central lubrication via the AmaDrive

14.7 Maintenance of the carrier vehicle

- Self-adhesive maintenance images for the diesel engine are supplied with each machine. Stick these on the machine at locations that are well visible.
- Please also observe the instruction manual for the Deutz engine.
- Have all maintenance work carried out on the engine by Deutz authorised dealers.

14.7.1 Oils and operating fluids

Mix other brands only upon request. A written confirmation of the supplier when using other oils is required in order to guarantee that no malfunctions occur.

The guarantee of the machine voids immediately when using other oils that specified!

Filling quantities of the operating fluids

Component	Designation		Fill-in quantity
Deutz engine	Engine oil		approx. 15.5 l
	Cooling agent		approx. 38 l
Hydraulic system	Hydraulic oil	Hopper	approx 120 l
		Overall system	approx. 180 l
Wheel gears	Wheel transmission oil		approx. 1.2 l
Air conditioner	Coolant		1900 g
	Contrast medium		10 g
	Compressor oil		5 g
Spraying pumps (CP2)	Engine oil 15W40		each 1,3 l

Oils

Engine oils	
	Deutz quality class: Engine oils of the following quality classes are permitted: • DQC III LA • DQC IV LA (LA = Low Ash) **Viscosity class:** Select the viscosity class depending on the ambient temperature. **Standard:SAE 10W/40 (ambient temperature of -20°C to 40 °C)**

Hydraulic oils		
HVLP 46	Finke	AVIATICON HV 46
HVLP 46	Viscosity index ≥ 150	

Fill only cleaned hydraulic oil. Required purity class:

- 9 according NAS 1638
- 18 /16/ 13 according ISO 4406/1999

Wheel transmission			
	EP oil MIL-L-2105 C or API GL5 Viscosity: SAE 80 W/90		
	Brands (Examples)	**mineral**	**synthetic**
	Shell	Spirax A	Transaxle 75W90
	Agip	Rotra MP 80W90	GearSynth 75W90
	Aral	EP Plus 80W90	Hyp Syn 75W90
	BP	Energear Hypo 80W90	Energear SHX-M 75W90

Protective agent for cooling systems	Brand	Designation
	Deutz AG	TN 0101 7990 (5 litres) TN 0101 7991 (20 litres)
	ARAL	Antifreeze Extra
	AVIA	Antifreeze APN
	BASF	Glysantin G48 Protect Plus
	Mobil	Mobil Antifreez Extra
	Shell	GlycoShell
	Castrol	Castrol Antifreeze NF
	TOTAL	Glacelf MDX

14.7.2 Cleaning the engine cooler and air conditioning condenser

Clean the radiator and the condenser to the left and right side of the cabin using compressed air.

1. Remove the side cover.
2. Pull the grille outwards.
3. Clean the radiator and the condenser to the left and right side of the cabin using compressed air.
4. If necessary, clean the grille separately.

Compressed air, maximum 5 bar!

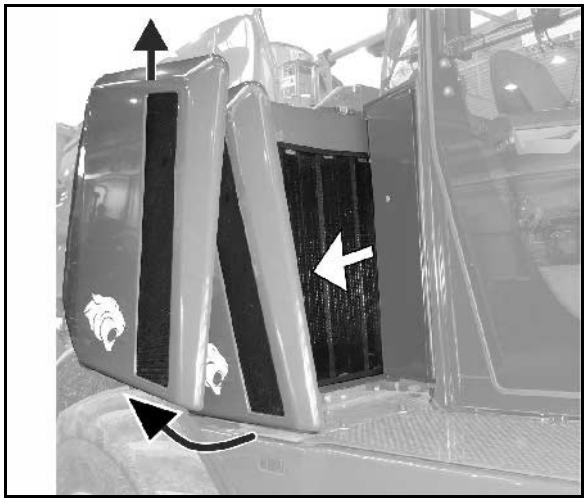

14.7.3 Wheel gears

The reduction gear unit that is a planetary gear is coupled via a coupling part on the wheel motors.

The maintenance is limited to an initial oil change after 100 operational hours and then every 1000 operational hours!

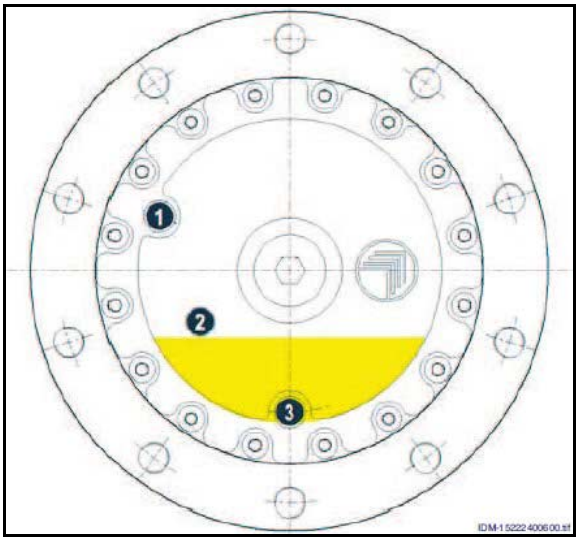

(1) Filling opening

(2) Oil level monitoring opening

(3) Drain opening

Oil level check:

1. Position the machine so that **the drain plug is at the bottom.**
2. Remove the oil level plug.

→ The oil level should be up to the oil level monitoring opening.

Oil change:

- Required amount of oil: ~ 1.2 l
- Change the oil using warm oil!

1. Park the machine so that the drain plug is at the bottom.
2. Remove filler plug, oil level plug and drain plug.

→ Collect the oil draining out.

3. Refit the drain plug.
4. Fill in oil through the filling opening until it reached the oil level monitoring opening.
5. Screw the bolts back in.
6. Carry out several rotations of the gearbox and check the filling level again.

Always consult your technical professional in the event of malfunctions in the wheel drives.

14.7.4 Tyres / wheels

- **Required tightening torque for wheel nuts or bolts: 510 Nm**
- **Tyre pressure, see Seite 47.**

After tightening the wheel nuts, remount the protective caps.

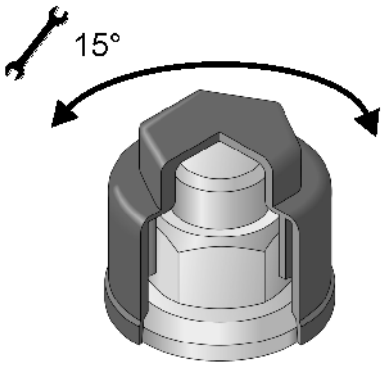

Use of twin tyres is not permitted.

- Regularly check the
  - Wheel nuts for firm seating.
  - Tyre pressure.
- Only use the tyres and wheels which we have specified (see page Seite 47).
- Repair work on tyres must only be carried out by specialists using suitable assembly tools.
- Tyre fitting requires sufficient skills and proper assembly tools.

- **When working on the running gear , the jack may only be positioned under the marked lifting points (MD101).**
- **The minimum load bearing capacity must be 5 tons.**
- **Use a car lifter with U-shaped recording in the marked places!**

Replacing the wheels with another offset depth

The offset depth influences the track width of the machine.

The wheels used must be entered for the correct display of the track width on the AMADRIVE.

→ The minimum track width must be no less than 1800 mm. Otherwise, the wheels will collide with the running gear and there is a risk of tipping.

Tyre pressures

- The required tyre pressure is dependent on
  - tyre size.
  - tyre loading capacity.
  - speed.
- The operational performance of the tyres is reduced
  - by overloading.
  - if tyre pressure is too low.
  - if tyre pressure is too high.

- Check tyre pressures regularly when the tyres are cold, i.e. before starting a run (see page).
- The difference in pressure between the tyres on one axle must be no greater than 0.1 bar.
- Tyre pressure can be raised by up to 1 bar after a fast run or in warm weather. Tyre pressure should on no account be reduced as it is then too low when the tyres cool down.

Fitting tyres

- Remove any instances of corrosion from the wheel rim seating surfaces before fitting a new / another tyre. Corrosion can cause damage to the wheel rims when the vehicle is in operation.
- When fitting new tyres, always use new valves for tubeless tyres or new inner tubes.
- Always fit the valves with valve caps which have a gasket insert.

14.7.5 Brakes

WARNING

- **Repair and adjustment work on the service braking system should only be carried out by trained specialist personnel.**
- **Special care is required for welding, torch cutting and drilling work in the vicinity of brake lines.**
- **Always perform a braking test after any adjusting or repair work on the braking system.**

WARNING

- **The air reservoir must not**
  - **move around in the tensioning belts.**
  - **be damaged.**
  - **show any outward signs of corrosion damage.**

Air drier cartridge

The air drier cartridge is located under the cabin behind the right-hand maintenance flap.

Before replacing the air drier cartridge, depressurize all air pressure vessels via the condensation drain.

Draining the air reservoir

The air reservoirs are located under the cabin behind the right-hand maintenance flap.

Additional air reservoir for trailer brakes (with towing device for the trailer) in the storage compartment at the front under the cab.

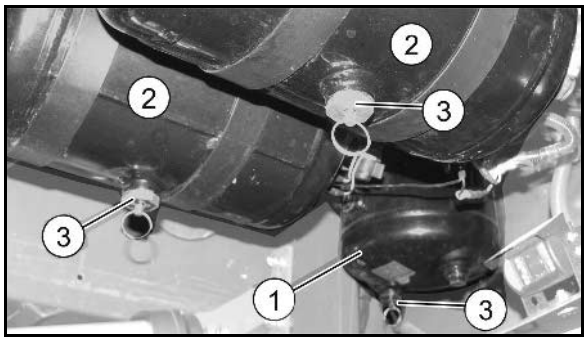

(1) Air reservoirs air drier

(2) 2 air reservoirs brake system

(3) Drainage valve

1. Pull the drainage valve in a sideways direction using the ring until no more water escapes from the air reservoir.

→ Water flows out of the drainage valve.

2. Unscrew the drainage valve from the air reservoir and clean the air reservoir if there are signs of dirt.

Test instructions for dual circuit service brake system (workshop work)

1. Leak tightness check

1. Check all connections, pipe lines, hose lines and screw connections are tight.
2. Remedy any leaks.
3. Repair any areas of chafing on pipes and hoses.
4. Replace porous and defective hoses.
5. The dual-circuit service brake system may be considered tight if within 10 minutes the pressure does not drop any more than 0.15 bar.
6. Seal any leaking areas or replace leaking valves.

2. Check pressure in the air reservoir

1. Connect a pressure gauge to the test connection on the air reservoir.

   Set value 8.0 to 9,5 $^{+0.2}$ bar

Checking the brake cylinder pressure

1. Connect a pressure gauge to the test connection on the brake cylinder.

   Set value: with brake not applied 0.0 bar

4. Visual inspection of the brake cylinder

1. Check the dust sleeves or gaiters for damage.
2. Replace damaged parts.

5. Joints on brake valves, brake cylinders and brake linkages

Joints on brake valves, brake cylinders and brake linkages must move freely. Grease or lightly oil, if necessary.

14.7.6 Hydraulic part of brake system

Check brake fluid level

Check brake fluid level:

The equalising tank is filled with brake fluid up to the "max." marker in accordance with DOT 4.

The brake fluid must be between the marks "max." and "min.".

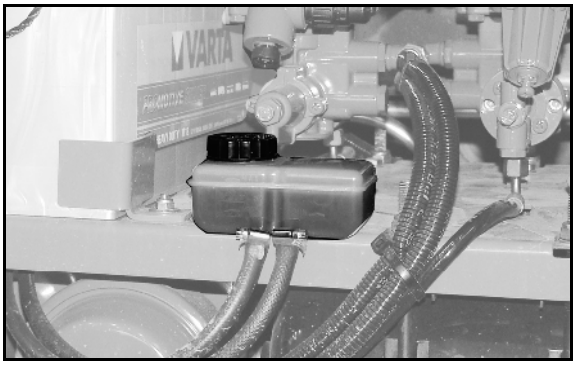

If any brake fluid is lost, visit a specialist workshop!

Brake fluid

When handling brake fluid observe the following:

- Brake fluid is corrosive and must therefore not come into contact with the paint on the machine. If necessary, wipe it off immediately and wash it off with plenty of water.
- Brake fluid is hygroscopic, i.e. it absorbs moisture from the air. Therefore only store the brake fluid in closed containers.
- Brake fluid that has already been used in the braking system must not be reused.
  Even when bleeding the brake system, only use new brake fluid..
- The high requirements made of brake fluid are subject to the standard SAE J 1703 or the American safety statutes DOT 3 and DOT 4.
  Only use brake fluid which complies with DOT 4.

Brake fluid must never come into contact with mineral oil. Even small traces of mineral oil will render brake fluid unusable or cause a failure of the brake system. Plugs and collars on the brake system will be damaged, if they come into contact with agents that contain mineral oil. For cleaning purposes, do not use any cloths that contain mineral oils.

WARNING

Under no circumstances may drained brake fluid be reused.

Under no circumstances may drained brake fluid be poured away or put in the household waste, but must be collected separately from used oil and disposed of via authorised waste disposal companies.

Brake check on hydraulic component of brake system (workshop work)

Brake check on the hydraulic part of the braking system:

- check all flexible brake hoses for wear
- check all brake lines for damage
- check all screw unions for seal tightness
- renew any worn or damaged parts.

Replacing brake fluid (workshop work)

If possible, change the brake fluid after the winter.

Changing the brake pads

Changing the brake pads should only be performed by an authorized repair shop!

Perform a brake test following all work on the brakes.

- The braking distance from a speed of 40 km/h should be between 18 m and 24 m.
- The machine must not pull to one side when braking.
- Minimum thickness of brake pads: 3 mm.
- Change all the brake pas on one axle respectively.
- When changing the brake pads, check the brake discs for grooves and disc thickness.

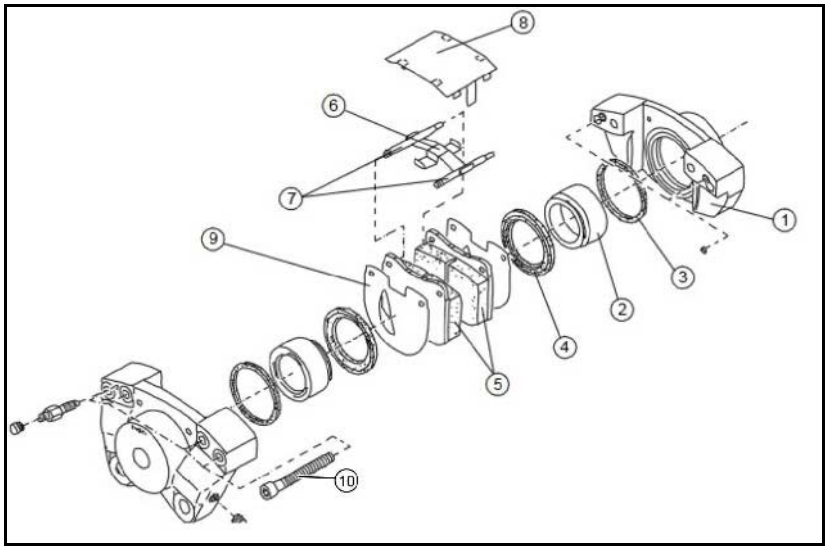

(1) Brake disc half

(2) Piston

(3) Sealing ring

(4) Dust cap

(5) Brake pad

(6) Cross spring

(7) Lock pin with split pin

(8) Cover sheet

(9) Insulation sheet

WARNING
The calliper screw joint must not be loosened under any circumstances!

1. Undo the lock pins.
2. If available: Drive out the split pins.
3. Remove the safety clips.

→ Caution: The sprung plate can jump out.

4. Remove the brake pads and shims.
5. Clean the brake caliper with white spirit (oily cleaning agents prohibited).
6. Press the brake piston back into the housing.
7. Carry out installation in the reverse order.

→ Caution:

- Recesses on the shims must be on the entry side of the disc.
- Install the split pins on the lock pins with the slit pointing downwards.

8. Carry out a braking test, beforehand press the brake pedal several times while stationary.

(1) Direction of rotation

(2) Recess

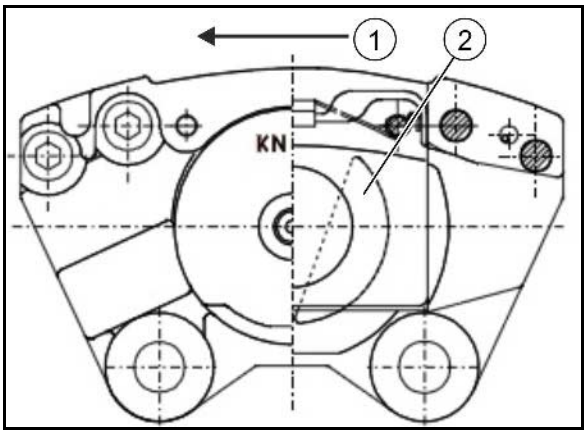

Seal replacement

If there are any leaks, use complete seal sets / repair sets.

If necessary also replace the dust caps.

Bleeding the brake system (workshop work)

After each brake repair, for which the system has been opened, bleed the brake system, because air may have entered the pressure hoses.

The brake system is bled in the specialist workshop using a brake filling and bleeding device as follows:

1. Remove the equalising tank screw union
2. Fill the equalising tank up to the top edge.
3. Fit the bleeder muff to the equalising tank.
4. Connect the filling hose
5. Open the stop tap of the filling union piece.
6. Bleed the main cylinder.
7. Remove brake fluid from the system's bleeder screws until it flows out clear and bubble-free. To do so, the transparent bleeder hose, which leads to a collecting cylinder one-third filled with brake fluid, is pushed onto the bleeder valve to be bled.

→ Bleed using the upper venting screws one-after another starting at the rear and then on the front axle.

8. After bleeding the complete brake system, close the stop tap on the filling screw.
9. Relieve the residual pressure coming from the filling device.
10. Close the last bleeder valve once the residual pressure coming from the filling device has dropped and the brake fluid level in the equalising tank has reached the "MAX" mark.
11. Remove the filling screw.
12. Close the equalising tank.

Carefully open the bleeder valves so that they are removed completely. Spraying the valves with a rust releasing agent approx. 2 hours before bleeding is recommended.

Perform a safety check:

- Have the venting screws been tightened?
- Is there enough brake fluid?
- Check that all connections are tight.

Following any repair work to the brake system, check that it is working properly by braking several times on a road with little traffic. When you do this, you must perform at least one emergency stop.

Caution: Pay attention to any traffic behind you when testing the brake system!

14.7.7 Hydraulic system

WARNING

Risk of infection through the high pressure hydraulic fluid of the hydraulic system entering the body.

- Only a specialist workshop may carry out work on the hydraulic system.
- Depressurise the hydraulic system before carrying out work on the hydraulic system.
- When searching for leak points, always use suitable aids.
- Never attempt to plug leaks in hydraulic hose lines with your hand or fingers.

  Escaping high pressure fluid (hydraulic fluid) may pass through the skin and ingress into the body, causing serious injuries.

  If you are injured by hydraulic fluid, contact a doctor immediately. Risk of infection

- When connecting the hydraulic hose lines to the hydraulic system of connected machines, ensure that the hydraulic system is depressurised on both the drawing vehicle and the trailer.
- Ensure that the hydraulic hose lines are connected correctly.
- Regularly check all the hydraulic hose lines and couplings for damage and impurities.
- Have the hydraulic hose lines checked at least once a year by a specialist for proper functioning.
- Replace the hydraulic hose line if it is damaged or worn. Only use genuine AMAZONE hydraulic hose lines.
- The hydraulic hose lines should not be used for longer than six years. This period includes any storage time of a maximum of two years. Even with proper storage and approved use, hoses and hose connections are subject to natural ageing, thus limiting the length of use. However, it may be possible to specify the length of use from experience values, in particular when taking the risk potential into account. In the case of hoses and hose connections made from thermoplastics, other guide values may be decisive.
- Dispose of old oil in the correct way. If you have problems with disposal, contact your oil supplier.
- Keep hydraulic fluid out of the reach of children!
- Ensure that no hydraulic fluid enters the soil or waterways.

Labelling hydraulic hose lines

Valve chest identification provides the following information:

(1) Manufacturer's marking on the hydraulic hose line (A1HF)

(2) Date of manufacture of the hydraulic hose lines (02 04 = February 2004)

(3) Maximum approved operating pressure (210 BAR).

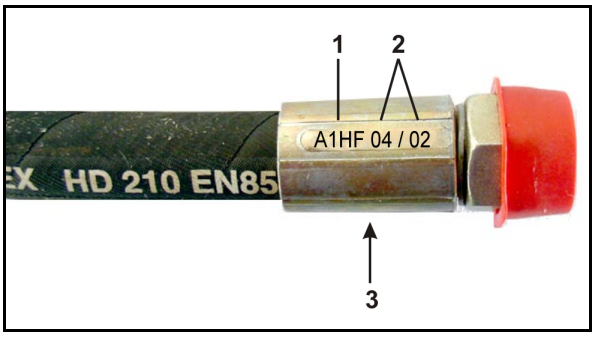

Maintenance intervals

After the first 10 operating hours, and then every 50 operating hours

1. Check all the components of the hydraulic system for tightness.
2. If necessary, tighten screw unions.

Before each start-up:

1. Check the hydraulic hose lines for visible damage.
2. Repair any areas of chafing on hydraulic hose lines and pipes.
3. Replace any worn or damaged hydraulic hose lines immediately.

Inspection criteria for hydraulic hose lines

For your own safety and in order to reduce pollution, ensure the following inspection criteria.

Replace hoses if the respective hose fulfils at least one of the following criteria:

- Damage to the outer layer up to the ply (e.g. scouring points, cuts, cracks).
- Brittleness of the outer layer (crack formation of the hose material).
- Deformations which do not match the natural shape of the hose. Both in a depressurised and pressurised state or when bent (e.g. layer separation, bubble formation, pinching, bends).
- Leak points.
- Damage or deformation of the hose assembly (sealing function restricted); minor surface damage is not a reason for replacement.
- Movement of the hose out of the assembly.
- Corrosion of assembly, reducing the function and tightness.
- Installation requirements not complied with.
- Life span of 6 years has been exceeded.

  The date of manufacture of the hydraulic hose line on the assembly is decisive for determining these six years. If the date of manufacture on the assembly is "2004", then the hose should not be used beyond February 2010. See also "Labelling of hydraulic hose lines".

Installation and removal of hydraulic hose lines

When installing and removing hydraulic hose lines, always observe the following information:

- Use only genuine AMAZONE replacement hoses.
- Ensure cleanliness.
- You must always install the hydraulic lines so that, in all states of operation:
  - There is no tension, apart from the hose's own weight.
  - There is no possibility of jolting on short lengths.
  - Outer mechanical influences on the hydraulic hose lines are avoided.

    Use appropriate arrangements and fixing to prevent any scouring of the hoses on components or on each other. If necessary, secure hydraulic hose lines using protective covers. Cover sharp-edged components.
  - The approved bending radii may not be exceeded.
- When connecting a hydraulic hose line to moving parts, the hose length must be appropriate so that the smallest approved bending radius is not undershot over the whole area of movement and/or the hydraulic hose line is not overtensioned.
- Fix the hydraulic hose lines at the specified fixing points. There, avoid hose clips, which impair the natural movement and length changes of the hose.
- The coating of hydraulic hose lines is not permitted.

14.7.8 Hydraulic oil

Correct oil level at oil temperature

- 60° Celsius – Centre inspection glass
- 20° Celsius – lower third of inspection glass

The oil quantity is correct when the oil level is located

- at the lower third (cold oil),
- up to the middle

of the inspection glass.

Where required, oil can be refilled through a filling opening on the top side of the tank.

If the oil level falls below the minimum measurement or the oil temperature increases too high, a warning signal is output in the cabin.

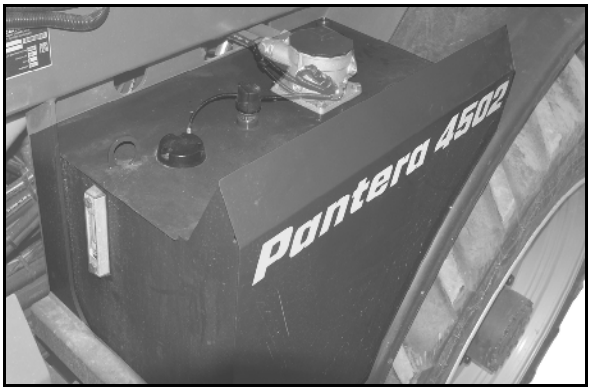

Fig. 7

Oil change:

1. Stop the engine, allow the hydraulic oil to cool sufficiently so that there is no risk of burns.
2. Place an oil drip pan under the hydraulic tank.
3. Unscrew the oil drain screw on the bottom side of the tank.
4. Drain the oil.
5. Screw in the oil drain plug with a new seal and tighten.
6. Fill with lubrication oil.
   - Details for quality / viscosity, see Seite 227.
   - Filling quantity 120 litres.
   - The inspection glass is decisive for the filling quantity.
7. Check the oil level.

CAUTION

Risk of scalding when draining due to hot oil!

Hydraulic oil filter

- Changing the hydraulic oil filter can be carried out when the hydraulic oil tank is filled.
- Collect any possible escaping oil.
- Risk of scalding when draining due to hot oil!

Return filter in the oil tank

The return filter is located in the filling opening of the hydraulic oil tank.

Changing the filter:

1. Remove the cover (1) from the housing (3).
2. Replace the return filter (2).
3. Refit the cover.

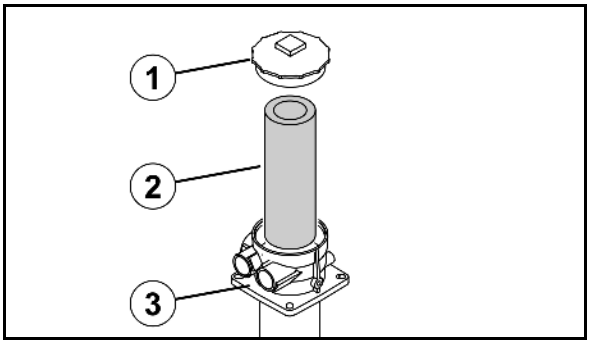

Hydraulic pump pressure filter

The pressure filter is located at the right on the hydraulic pump (1).

Changing the filter:

1. Turn off the engine.
2. Undo the lubricating oil filter cartridge using standard commercial tools and unscrew it.
3. Collect any possible escaping oil.
4. Clean the sealing surface of the filter support from any dirt.
5. Screw in the cartridge by hand until the seal rests.
6. Tighten the lubricating oil filter cartridge by another half a turn.
7. Check the seal of the lubricating oil filter again for leaks.

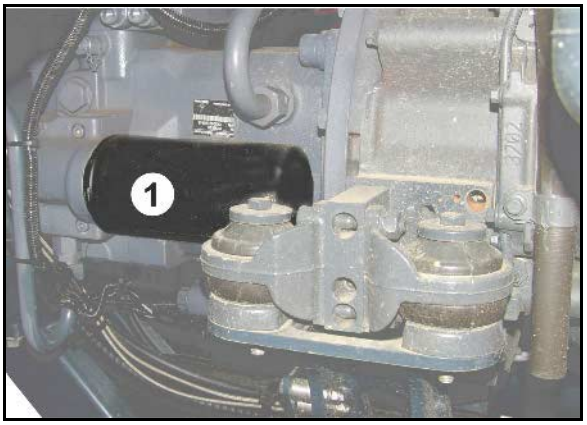

14.7.9 Control

14.7.9.1 Clean / change the cabin air filter

WARNING

Air filter installed incorrectly or a defective filter. Dust enters the cabin. Dust is inhaled and causes health problems.

- Make sure the filter has a tight fit.
- Replace defective air filters immediately.

1. Open the cover (1) on the cabin roof, left side.
2. Unlock the filter (2), take out and replace.
3. Replace damaged filters and sealing profiles in all cases.

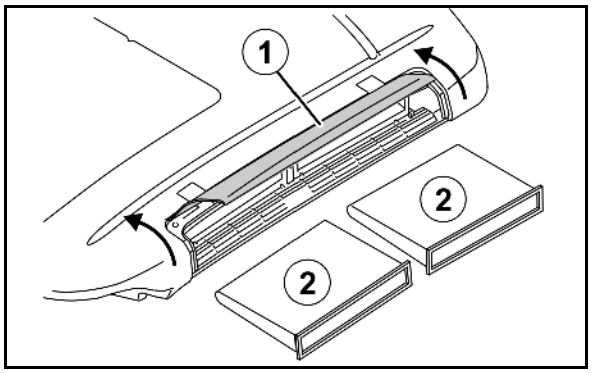

When using activated carbon filters, replace only the filter insert!

14.7.9.2 Clean the cabin circulation filter

1. Remove the circulating air grille (1).
2. Vacuum clean, knock or blow-out filters with soiling on the surface with compressed air.
3. Renew damaged filters.
4. Install the circulating air grille.

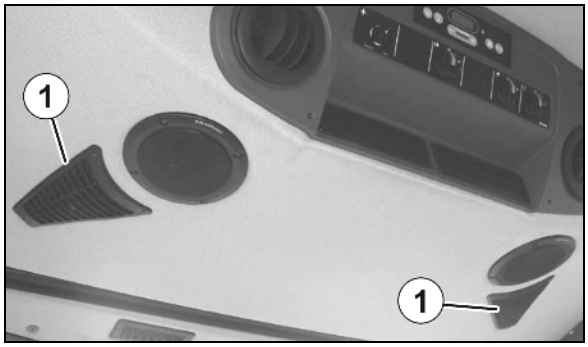

1. Remove the circulating air grille (1).
2. Vacuum clean, knock or blow-out filters with soiling on the surface with compressed air.
3. Renew damaged filters.
4. Install the circulating air grille.

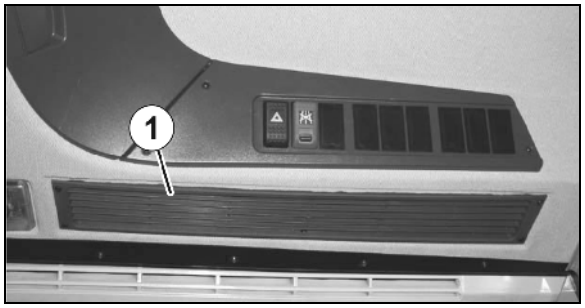

14.7.9.3 Cab air filtration of the Category 4 safety status

WARNING

Health risk from breathing in the filtered particles or skin contact!

When working on the opened filter housing, wear respiratory protection, protective gloves and suitable protective clothing.

- Clean the inside of the filter housing before installing a new filter!
- Do not use a high-pressure cleaner to clean the filter housing!
- Do not install damaged filters!
- Install the filter in the direction of flow!

The arrow indicated the direction of flow. Only works properly when the shown sequence is observed!

- For operation according to Category 4, it is necessary to replace the frame by the activated carbon filter 00 0536 555 0, which is supplied separately wrapped in an air-tight package in the initial delivery.
- Only open the packaging of the activated carbon filter when it going to be used.
- Do not used an activated carbon filter if the packaging is damaged or the date of opening is not known.

(1) Activated carbon filter

(2) Aerosol filter

(3) Dust filter

Arrow = Direction of flow

Insert the activated carbon filter at the last position in front of the fan compartment.

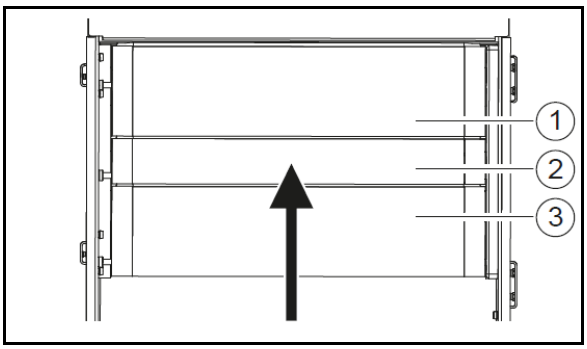

The delivery includes a packaged filter set, consisting of the housing with the inserted filters as well as a sealed activated carbon filter according to DIN EN 15695-2 for Category 4 operation.

- If the warning light is illuminated at the maximum fan level, the external air filters are fully loaded.
- If the pressure display still signalises insufficient positive pressure in the cab, install new filter elements.
- If the warning light is illuminated permanently despite installing new filter elements, check the cab and the air ducts for leaks.

Changing the filter

WARNING

Health risk from breathing in the filtered particles or skin contact!

When working on the opened filter housing, wear respiratory protection, protective gloves and suitable protective clothing.

Regardless of the machine's operational hours, the following service intervals apply:

- Filter change for activated carbon filter every 3 months (Category 4 operation)
- Filter change for dust aerosol every 6 months

Only perform checks and filter changes outside of the contaminated area and when the ignition is deactivated. Wear protective gloves.

1. Disconnect the central connector on the housing to interrupt the power supply.
2. Clean the filter inlet housing with a moist cloth after removing the used filter.
3. Check the housing and seals for damage.
4. Insert a new filter.
5. Ensure that the filter is properly inserted to ensure a complete seal.
6. Ensure that the housing lid is properly positioned.
7. Ensure that the sequence of the filter elements is observed.
8. After changing the filter, run the cab air filtering at the lowest level.

14.7.9.4 Check the damping bearings of the cabin for their correct fit

(1) Four damping bearings

(2) Damping bearing screw connection

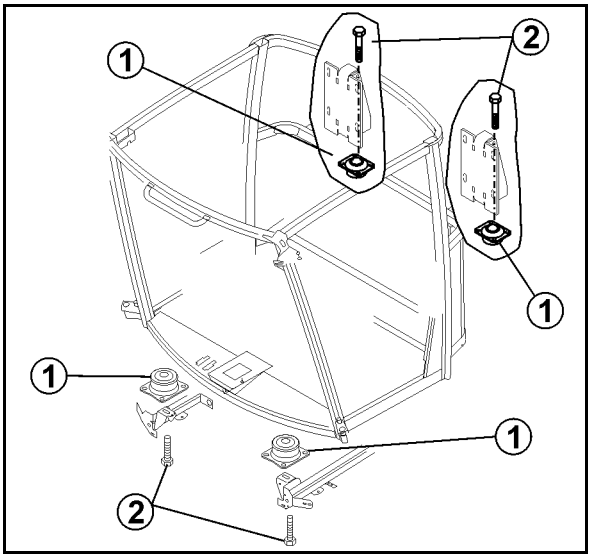

14.7.10 Air conditioner

14.7.10.1 Put the air conditioning system into operation

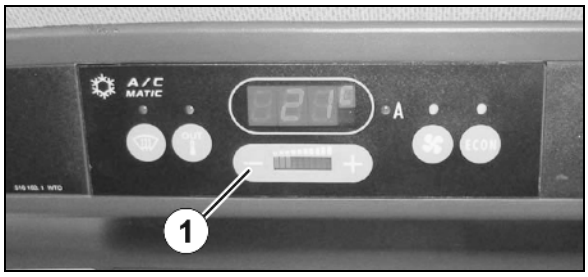

In order to prevent damage to the compressor with machines fitted with air conditioner, the air conditioner should be put back into operation after longer standing times.

The commissioning makes sure that the oil is distributed in the air conditioner.

1. Switch on the diesel engine and run in idle speed.
2. Open all fan jets completely.
3. Open both doors.
4. Switch on the air conditioner.
5. Set the temperature controller (1) to the lowest temperature.
6. Blower to level 3 or automatic mode.
7. Allow the machine to run for minimum 5 minutes at idle speed.

The air conditioning system can now be operated as normal.

14.7.10.2 Working with refrigerant

DANGER

Death or severe injuries resulting from refrigerant.

Work on the air conditioning system may only be carried by an authorised workshop.

- Avoid any contact with the refrigerant.
- Wear protective gloves and protective goggles.
- No welding tasks may be carried out on the refrigerant circuit and in their immediate vicinity.
- Maximum ambient temperature for refrigerant: 80° Celsius

14.7.10.3 Replace the filter drier

- The filter drier is located between the front wheels.
- When installing a new filter drier, refill with 10 cm³ refrigerant oil.
- Renew the seal with each assembly.

Removing

1. Drain the refrigerant.
2. Unlock and remove the connector from the switch.
3. Unscrew the hose line.

   Seal the opening tight.
4. Remove the filter drier.

Installation

1. Mount the filter drier.
2. Screw on the hose line.
3. Plug the connector onto the switch.
4. Fill with refrigerant.
5. Perform functional check.
6. Perform leak test.

14.7.10.4 Air conditioning system filling quantity

- Coolant: 1900 g
- Contrast agent: 10 g
- Compressor oil: 5 g

Dispose of all replaced components of the air conditioning system correctly.

14.7.10.5 Air conditioning unit in the cabin roof

Soiled units lead to reduced heating and cooling performance. Uneconomical use of the machine.

- Observe prescribed maintenance intervals.
- With extensive dust accumulation, clean the unit more frequently.

CAUTION

Clean sensitive components with stronger compressed air or other cleaning devices. Components will be damaged.

- **Do not hold the compressed air jet close to sensitive components, such as cooling ribs or filter inserts.**
- **Never use a steam-jet cleaning device for cleaning.**

1. Unscrew the hood (1) from the cabin roof.
2. Blow out the evaporator (2) and warm water radiator (3) with compressed air (maximum 5 bar).
3. Renew damaged seals (1) under the cover.
4. Remount and screw on the hood.

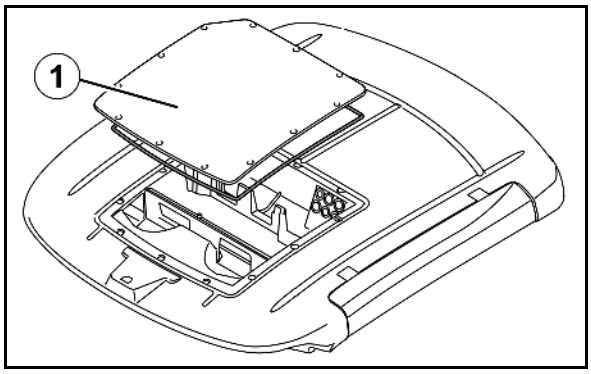

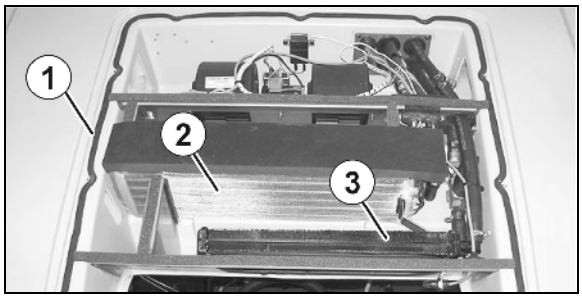

14.8 Settings on the unfolded sprayer boom

Alignment parallel to the ground

When the sprayer boom is unfolded and correctly adjusted, all of the spraying nozzles must have the same parallel distance from the ground.

If this is not the case, align the unfolded sprayer boom using counterweights (1) with the vibration compensation **unlocked**. Attach the counter-weights accordingly on the boom.

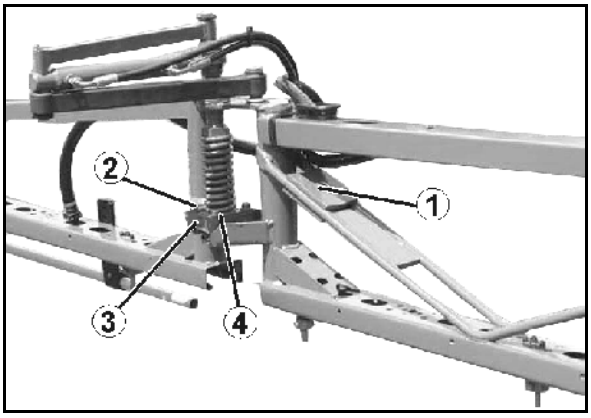

Horizontal alignment

In the direction of travel, all of the boom sections of the sprayer boom must be aligned. Horizontal alignment can be necessary

- after long periods of operation
- or rough ground contact of the sprayer boom.

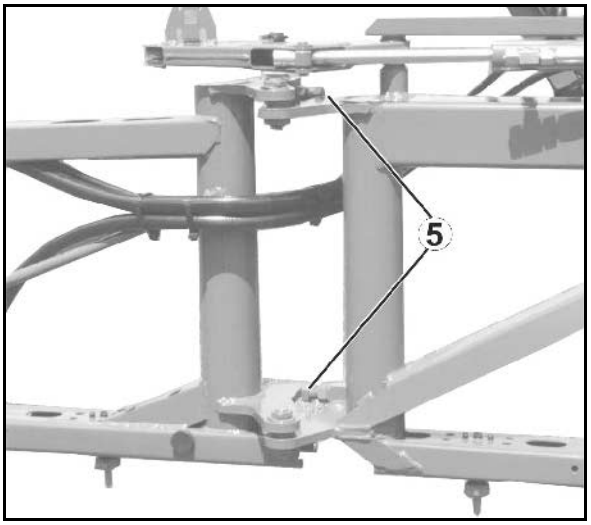

inner boom

1. Loosen the lock nut of the adjusting screw (5).
2. Turn the adjusting screw against the stops until the inner boom section is aligned with the centre part of the boom.
3. Tighten the lock nut.

Outer boom section

1. Loosen the bolts (2) for the fastening lug (3). Alignment is carried out right on the plastic jaw
   (4) using the elongated slots of the fas-tening lug.
2. Align the boom section.
3. Tighten the bolts (2).

14.9 Electro hydraulic boom

WARNING

Risk of injury due to accidental movement of the sprayer boom in automatic mode when entering the radiation area of the radar sensor.

Lock the sprayer boom

- Before leaving the tractor.
- If unauthorised persons are standing in the area of the sprayer boom.

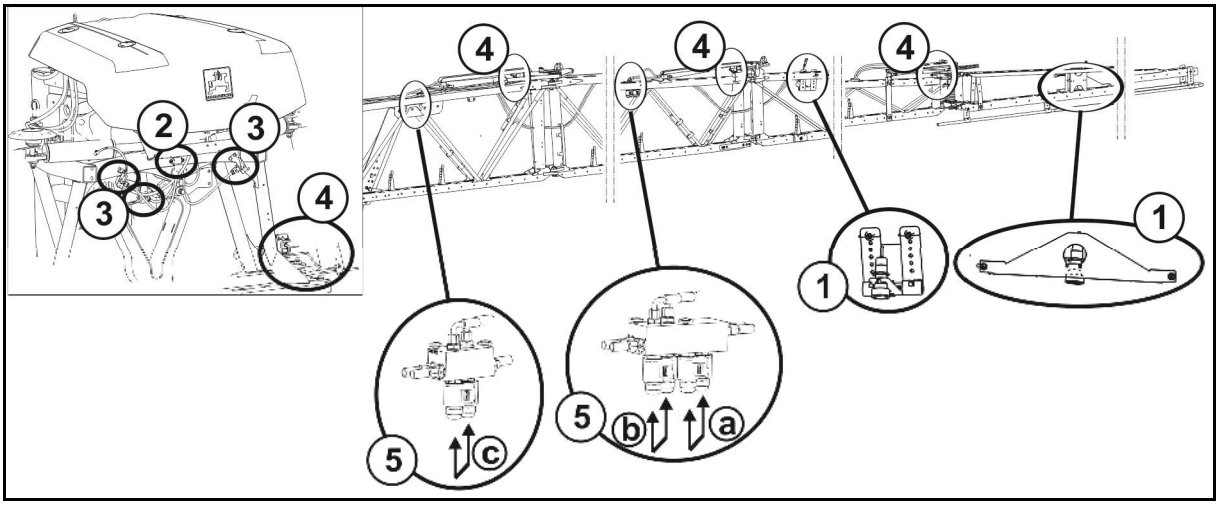

(1) Ultrasound sensors for boom tilt

(2) Yaw rate sensor for boom tilt

(3) Potentiometer for boom tilt

(4) Potentiometer for boom folding

(5) Hydraulic block with manual emergency folding function

Emergency folding function for the outer boom sections

In case of defective wiring harness, the boom sections can be hydraulically folded by manual actuation of the hydraulic block (5a, b, c).

→ Control terminal is switched on, oil circulation is active.

- Press the button on both solenoids 5a: outer boom section is folded.
- Press the button on both solenoids 5b: 2nd boom section from the outside is folded.
- Press the button on both solenoids 5c: 3rd boom section from the outside is folded.

Emergency folding with intact electronics:

See ISOBUS operating manual / settings / implement.

14.9.1 Pumps

14.9.1.1 Check the oil level

- Only use branded oil or multi-purpose oil 15W40!
- Check that the oil level is correct! Damage may be caused both by the oil level being too low or too high.
- Foam generation and cloudy oil are signs of a faulty pump membrane.

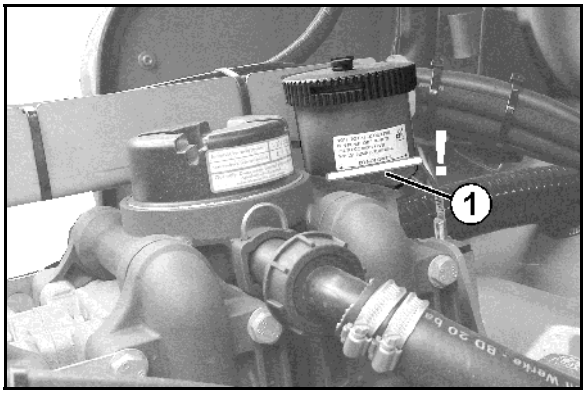

1. Check whether the oil level in the inspection window is visible when the pump is running
2. If necessary, refill oil when the pump is not running (maximum up to the marker (1).

14.9.1.2 Changing the oil

- After a few operating hours, check the oil level; top up if necessary.

1. Remove the pump.
2. Remove the cover.
3. Drain the oil.
   3.1 Turn the pump on its head.
   3.2 Rotate the drive shaft by hand until the used oil has all run out.
   The option also exists to drain the oil from the drain plug. However, with this procedure a slight oil residue remains in the pump; we therefore recommend the first approach.
4. Place the pump on an even surface.
5. Turn the drive shaft left and right alternately and slowly fill with new oil. The right quantity of oil has been reached when the oil is visible at the mark (1).

14.9.2 Checking and replacing the suction and pressure-side valves (workshop work)

- Pay attention to the respective installation position of the valves on the suction and pressure sides before removing the valve groups.
- When reassembling, ensure that the valve guide is not damaged. Damage may cause the valves to jam.

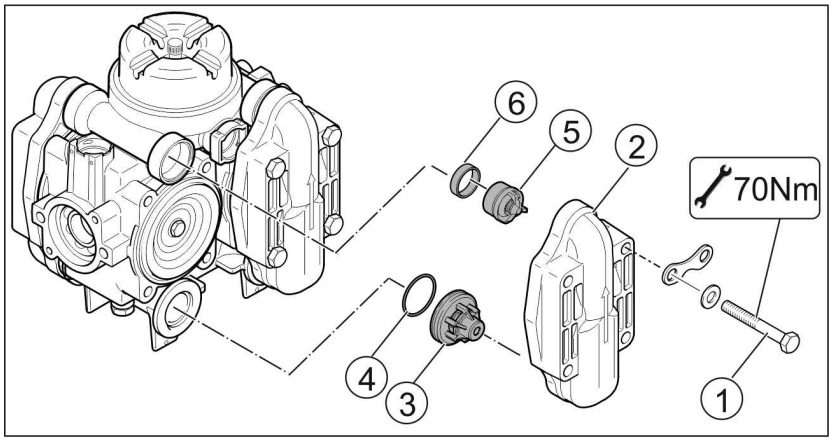

1. If necessary, remove the pump.
2. Remove (1) bolts.
3. Remove the valve cover (2).
4. Remove the valve groups (3).
5. Remove valve sealing ring (4) and o-ring (5).
6. Check the valve seat, valve spring and valve guide for damage or wear.
7. Replace defective parts.
8. Fit the valve groups after testing and cleaning.
9. Insert new O-rings.
10. Re-fit the valve cover, tighten the bolts to a torque of 70 Nm.

14.9.3 Checking and replacing the piston diaphragm (workshop work)

- At least once a year, check that the piston diaphragm is in perfect condition by removing it.
- Pay attention to the respective installation position of the valves on the suction and pressure sides before removing the valve group.
- Check and replace the piston diaphragm for each piston individually. Only remove the next piston in sequence after the currently removed piston has been completely checked and refitted.
- Always swivel the piston to be checked upwards so that the oil in the pump housing does not run out.
- As a rule, replace all piston diaphragms even if only one piston diaphragm distorted, punctured or porous.

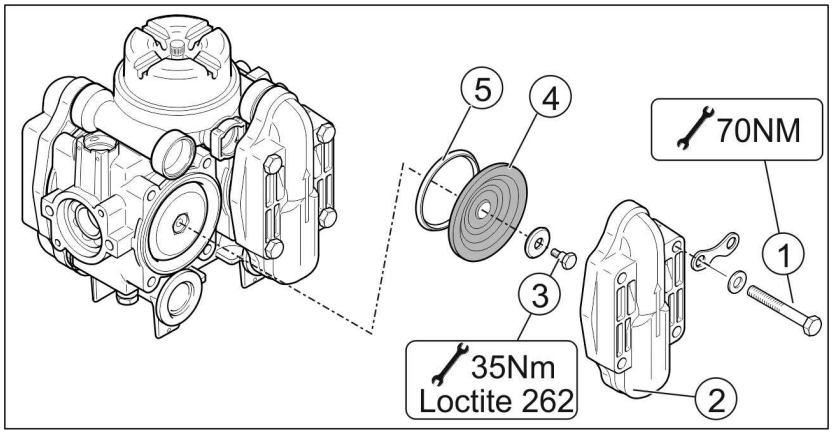

Checking the piston diaphragm

1. If necessary, remove the pump.
2. Slacken the screws (1).
3. Remove the valve cover (2).
4. Check the piston diaphragm (4) and the wedge ring (5).
5. Replace any damaged parts.

Replacing the piston diaphragm

1. Loosen bolt (Fig. 200/3) and remove the piston diaphragm (4) together with the holding washer from the piston.
2. If the piston diaphragm has been punctured, drain the oil/spray liquid mixture from the pump housing.
3. Clean the pump housing by flushing it thoroughly with diesel oil or paraffin.
4. Clean all sealing faces.
5. Correctly insert the piston diaphragm and wedge ring and fit them.

   Use thread lock for medium-fixed connections!
6. Re-fit the valve cover, tighten the bolts to a torque of 70 Nm.

14.10 Checking and exchanging the pressure reservoir diaphragm (workshop task)

Check that the diaphragm in the pressure reservoir is in perfect condition at least once a year by disassembling it.

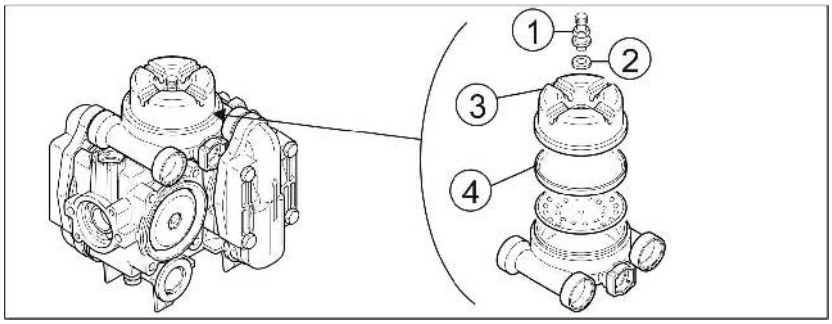

1. Remove the valve (1) and washer (2).

→ Air pressure bleeds off.

2. Place a suitable tool in the groove of the cover and unscrew the cover (3).
3. Check the diaphragm (4) and exchange the diaphragm if it is defective.
4. If required, clean the cover.
5. Re-fit the cover, washer and valve.
6. Recharge the pressure reservoir to 3 bar of air pressure.

If the pump does not run smoothly, the air pressure in the pressure reservoir can vary. The air pressure should be in the range of the spray pressure.

14.10.1 Calibrate the flow meter

- Calibrate the flow meter at least once a year.
- Calibrate the flow meter:
  - after removing the flow meter.
  - After long periods of operation, because spray residue deposits can form in the flow meter.
  - If differences occur between the required spray rate and the actual spray rate.
- Note the displayed "Impulse" value when you drive the field sprayer away from your location for determining the amount of water applied. The impulse value displayed lapses when transporting the field sprayer.
- Compare the flow meter with the flow meter at least once a year.
- Calibrate the flow meter with the return flow meter at the following times:
  - after calibrating the flow meter.
  - After removing the return flow meter.
- Move-out in work menu "Sprayer". The comparison can only be carried out when no fluid is used via the boom.

Pay attention to the operating instructions for the control terminal; Chapter Pulses per litre.

14.11 Eliminating limescale in the system

Indications that there may be lime deposits:

- The nozzle body does not open or close.
- Error messages on the control terminal

To eliminate limescale, use special acidification agents (e.g. PH FIX 5 from Sudau Agro).

DANGER
Health risk due to contact with acidification agents.

Observe the instructions for use on the packaging!

1. Completely clean the empty sprayer.
2. Fill 20 to 50 litres of flushing water into the spray liquid tank.
3. Start the spraying pump.
4. Fill acidification agent (3 l) into the spray liquid tank via the folding cover.
5. Allow the mixture to circulate in the spray line for 10-15 minutes.
6. Stop the pump drive and then allow the mixture to rest for 5 minutes.
7. Dilute the mixture with fresh water until the colour changes to yellow.

→ (pH 7 – yellow, pH 6 – orange, < pH 5 – pink)

8. AmaSelect: Without running the pump, use the manual nozzle selection to switch through all nozzle positions.

→ The diluted mixture is harmless and can be used to prepare the spray liquid.

14.12 Metering the field sprayer

Test the field sprayer by metering

- **before the start of the season.**
- **each time the nozzles are changed.**
- **to check the setting information in the spray tables.**
- **in the case of deviations between the actual and required application rate [l/ha].**

Observed deviations between the actual and required application rate [l/ha] can be caused by:

- the difference between the actual forward speed and that indicated on the tractor meter and/or
- natural wear to the spraying nozzles.

Accessories required for metering:

(1) Quick-check cup

(2) Stopwatch

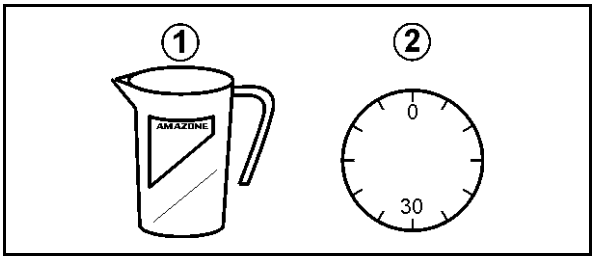

Determining the actual application rate while stationary via the individual nozzle output

Determine the nozzle output on at least 3 different nozzles. To do so, check one nozzle on the left and right boom section respectively, and one in the middle of the sprayer boom, as follows.

1. Control terminal:

   1.1 Enter the value for the required application rate on the control terminal.

   1.4 Enter simulated speed.
2. Fill the spray liquid tank with water (approx. 1000 l).
3. Switch on the agitator.
4. Switch on the sprayer and check that all of the nozzles work properly.
5. Determine the individual nozzle output [l/min] on several nozzles.

   To do so, hold the quick-check cup for exactly 30 seconds under a nozzle.
6. Switch off the spraying.
7. Determine the average individual nozzle output [l/ha].

- Using the table on the quick-check cup.
- By calculation.
- Using the spray table.

Example:

Noz. size	'06'
Intended forward speed	7 km/h
Nozzle output on the left boom section:	0.85 l/30s
Nozzle output in the middle	0.84 l/30s
Nozzle output on the right boom section:	0.86 l/30s
Calculated average value:	**0.85 l/30s → 1.7 l/min**

1. Determining the individual nozzle output [l/ha] with the quick-check cup

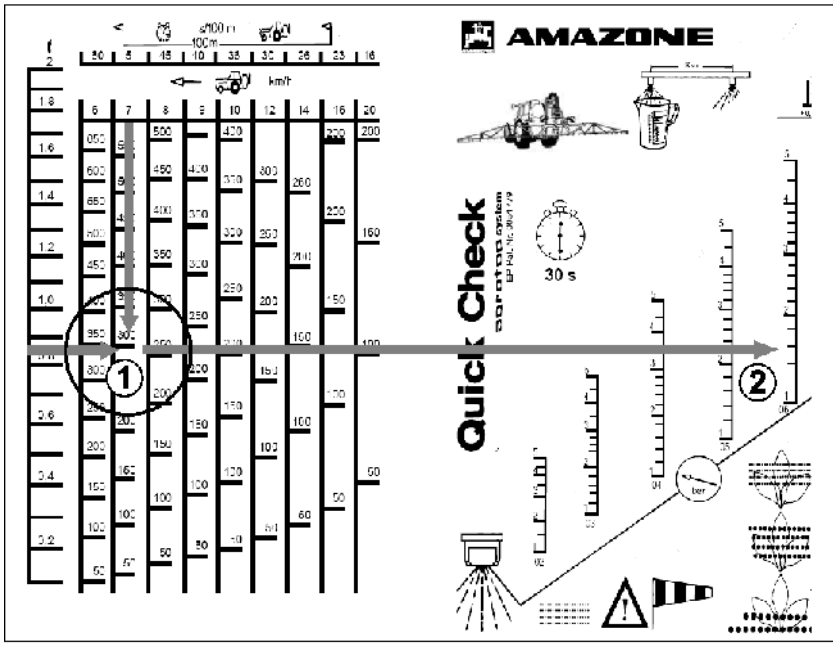

(1) →Determined application rate 290 l/ha
(2) →Determined spray pressure 1.6 bar

2. Calculating the individual nozzle output [l/ha]

$$\frac{d\ [l/min] \times 1200}{e\ [km/h]} = \text{Application rate } [l/ha]$$

- d: Nozzle output (calculated average value) [l/min]
- e: Forward speed [km/h]

$$\frac{1.7\ [l/min] \times 1200}{7\ [km/h]} = 291\ [l/ha]$$

3. Reading the individual nozzle output [l/ha] from the spray table

From the spray table (see page 288):

→ Application rate 291 l/ha
→ Spray pressure 1.6 bar

If the determined values for the application rate and application pressure do not match the set values:

- Calibrate the flow meter (see control terminal operating manual)
- Check all nozzles for wear and blockages.

14.13 Cleaning the flushing water suction filter

The flushing water tank must be empty.

1. Release the cover of the suction filter
2. Remove the cover with the suction filter
3. Clean the suction filter with water.
4. Reassemble the suction filter in the reverse sequence.
5. Check the filter housing for leaks.

14.14 Nozzles

Fitting the nozzle

Different nozzle sizes are marked with bayonet nuts of different colours.

1. Insert the nozzle filter (5) into the nozzle body from below.

The nozzle is located in the bayonet nut

2. Press a rubber seal (6) above the nozzle into the seat for the bayonet nut.
3. Turn the bayonet nut on the bayonet connection up to the stop.

Removing the diaphragm valve if the nozzle is dripping

Deposits on the diaphragm seat in the nozzle body cause dripping after the nozzle has been switched off.

1. Remove the spring element (3).
2. Take out the diaphragm (2).
3. Clean the diaphragm seat.
4. Check the diaphragm for cracks.
5. Reinstall the diaphragm and spring element.

Checking the nozzle shutter

From time to time, check the seating of the shutter (4).

To do this, insert the shutter into the nozzle body as far as possible using moderate thumb pressure.

Do not insert the slider up to the stop when in a new condition under any circumstances.

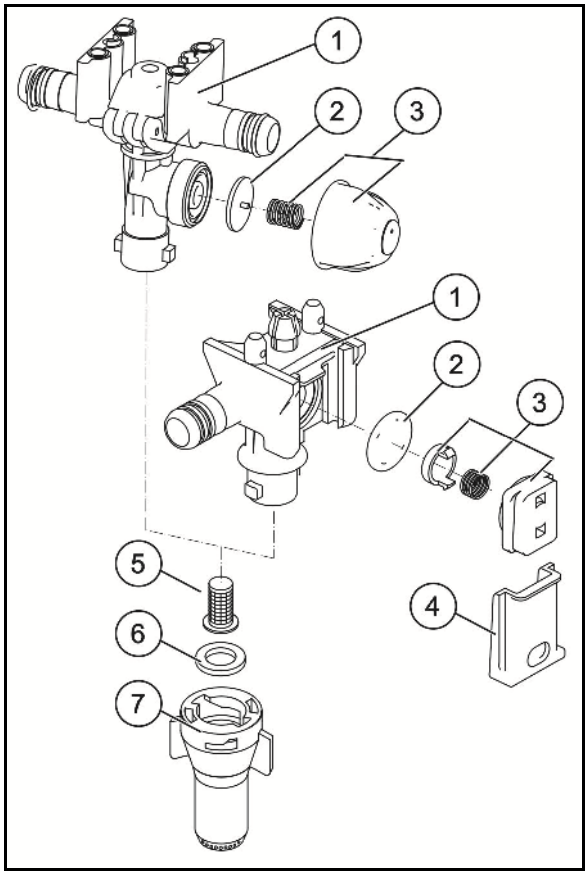

14.14.1 Line filter

- Clean the line filters (1) 3 - 4 months depending on operating conditions).
- Change damaged filter inserts.

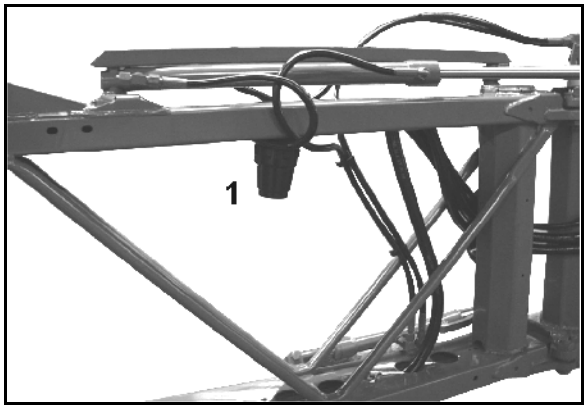

1. Press the locking piece together on the two lugs.
2. Remove the locking piece with O-ring seal, pressure spring and filter insert.
3. Clean (rinse out) the filter insert with petrol or thinner and then blow it dry with compressed air.
4. To reassemble, reverse the procedure and make sure that the O-ring seal is not twisted in the guide slot.

14.14.2 Instructions on testing the field sprayer

- Only authorised centres are permitted to carry out spray tests.
- According to law, a spray test must be carried out:
  - 6 months after commissioning (if not performed at time of purchase) at the latest, then
  - every two years thereafter.

Pump test - testing pump performance (delivery capacity, pressure)

Connect the test kit to the pump pressure connection.

Flow meter test

1. Remove all spray lines from the part width section valves.
2. Connect the flow meter connection to a part width section valve and connect to the tester.
3. Block the connections for the remaining part width section valves using blanks.
4. Switch on spraying.

Pressure gauge test

1. Remove a spray line from a part width section valve.
2. Connect the pressure gauge connection to a part width section valve with the help of the turned socket.
3. Screw the check gauge 1/4 of an inch into the inside thread.

15 Diagrams and overviews

15.1 Liquid circuit Comfort package 2 / part width section control

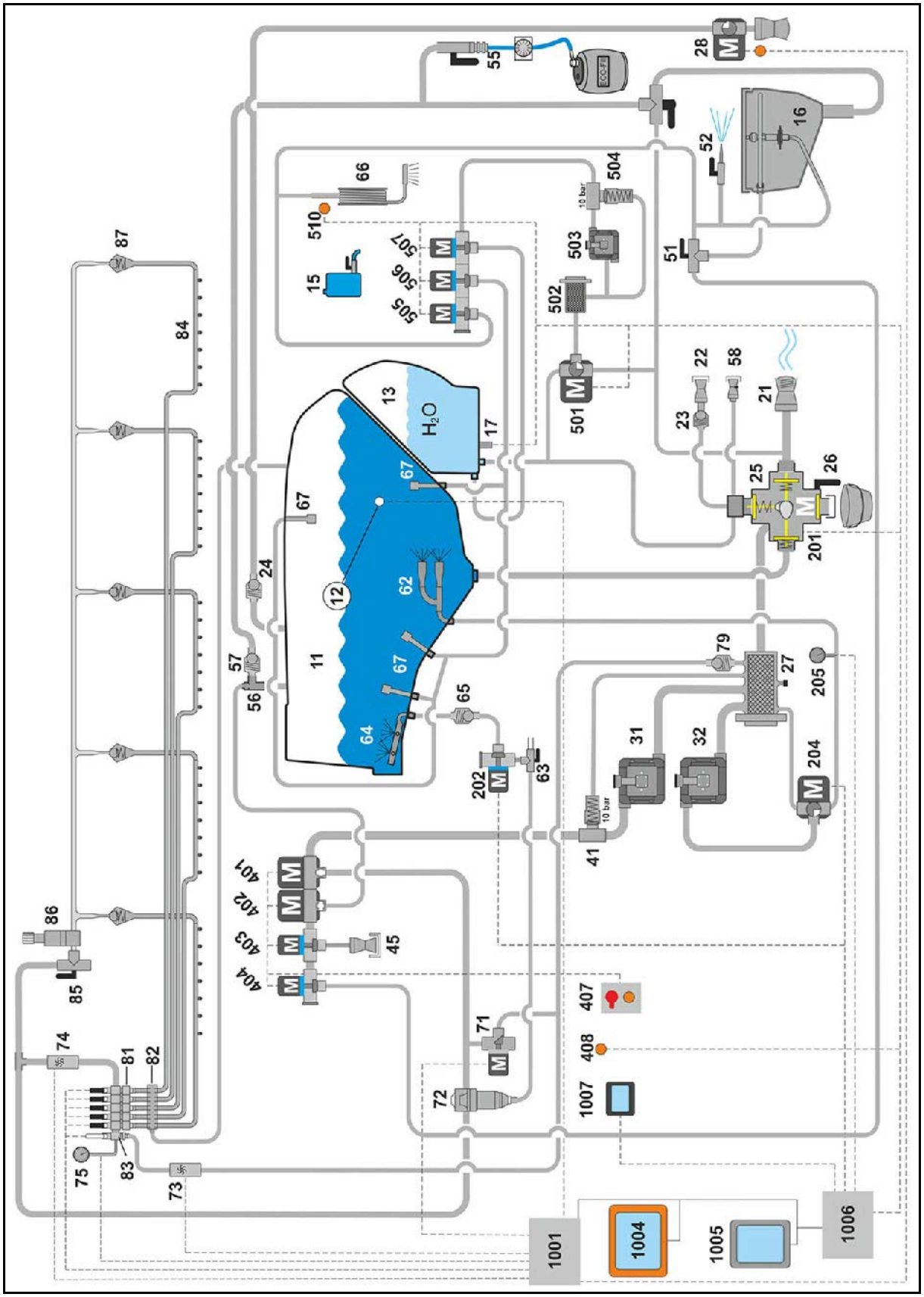

15.2 Liquid circuit Comfort package 2 / single nozzle control

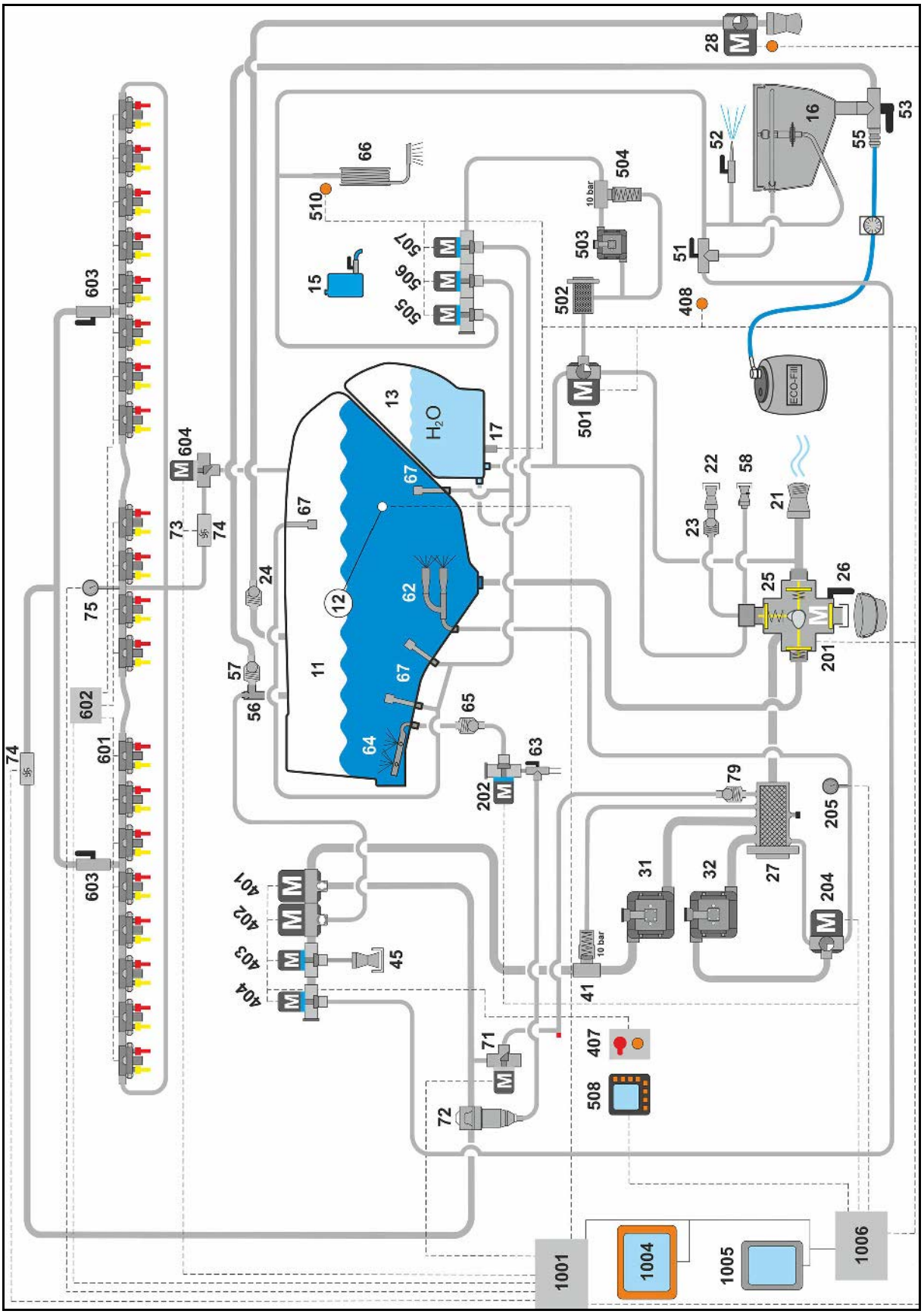

(1X) Tank
(11) Main tank
(12) Fill level indicator main tank
(13) Flushing water tank
(15) Hand wash tank
(16) Induction bowl
(17) Filling level sensor, clear water tank

(2X) Suction side
(21) External suction
(22) Filling with flushing water
(23) Non-return valve for flushing water (connection)
(24) Non-return valve for flushing water main tank
(25) Suction tap
(26) Drain main tank
(27) Suction filter
(28) Valve, clear water pressure filling, main tank with button (Option)

(3X) Pumps
(31) Spraying pump
(32) Agitator pump

(4X) Pressure side
(41) Pressure relief valve
(45) Quick emptying connection

(5X) Induction bowl & injector
(51) Switch tap pressure Induction bowl
(52) Spray gun
(53) Switch tap Induction bowl
(55) Ecofill connection
(56) Injector
(57) Non-return valve - injector
(58) Flushing base

(6X) Cleaning & agitators
(62) Main agitators
(63) Tap for additional agitator
(64) Additional agitator
(65) Non-return valve for additional agitator
(66) External cleaning
(67) Internal cleaning

(7X) Spraying operation
(71) Pressure control valve
(72) Pressure filter
(73) Flow meter 1
(74) Flow meter 2
(75) Pressure sensor
(79) Pressure stage 0.8 bar

(8X) Booms
(81) Boom part width section valves
(82) Pressure relief channel
(83) Bypass valve
(84) Spray line
(85) Pressure circulation system (DUS) tap
(86) DUS pressure valve
(87) DUS non-return valve

(2XX) Comfort package I
(201) Motor, suction tap
(202) Additional agitator motor valve (204) Main agitator motor valve
(205) Pressure sensor - main agitator

(4XX) Electrical pressure tap
(401) Spraying operation motor valve
(402) Injector motor valve
(403) Quick emptying motor valve
(404) Spray gun motor valve
(405) Motor valve, internal cleaning
(406) Motor valve, external cleaning
(407) Pressure tap switch
(408) Buton injector

(5XX) Comfort package II
(501) Motor Flushing water
(502) Suction filter Flushing water
(503) Flushing water pump
(504) Pressure relief valve
(505) Motor External cleaning and induction bowl
(506) Motor Internal cleaning
(507) Motor Filling flushing water tank
(508) TwinTerminal CP2
(510) Button exterior cleaning

(6XX) AMASELECT / AMASWITCH
(601) Nozzle body
(602) Central unit
(603) Pressure side stop tap
(604) Return flow regulator

(10XX) Electronics
(1001) Electric sprayer (simplified)
(1004) Control terminal
(1005) AMADRIVE
(1006) Electric Pantera (simplified)
(1007) Fill level indicator
(1008) Induction bowl sensor

15.3 Hydraulic diagrams

Hydraulic diagram 1

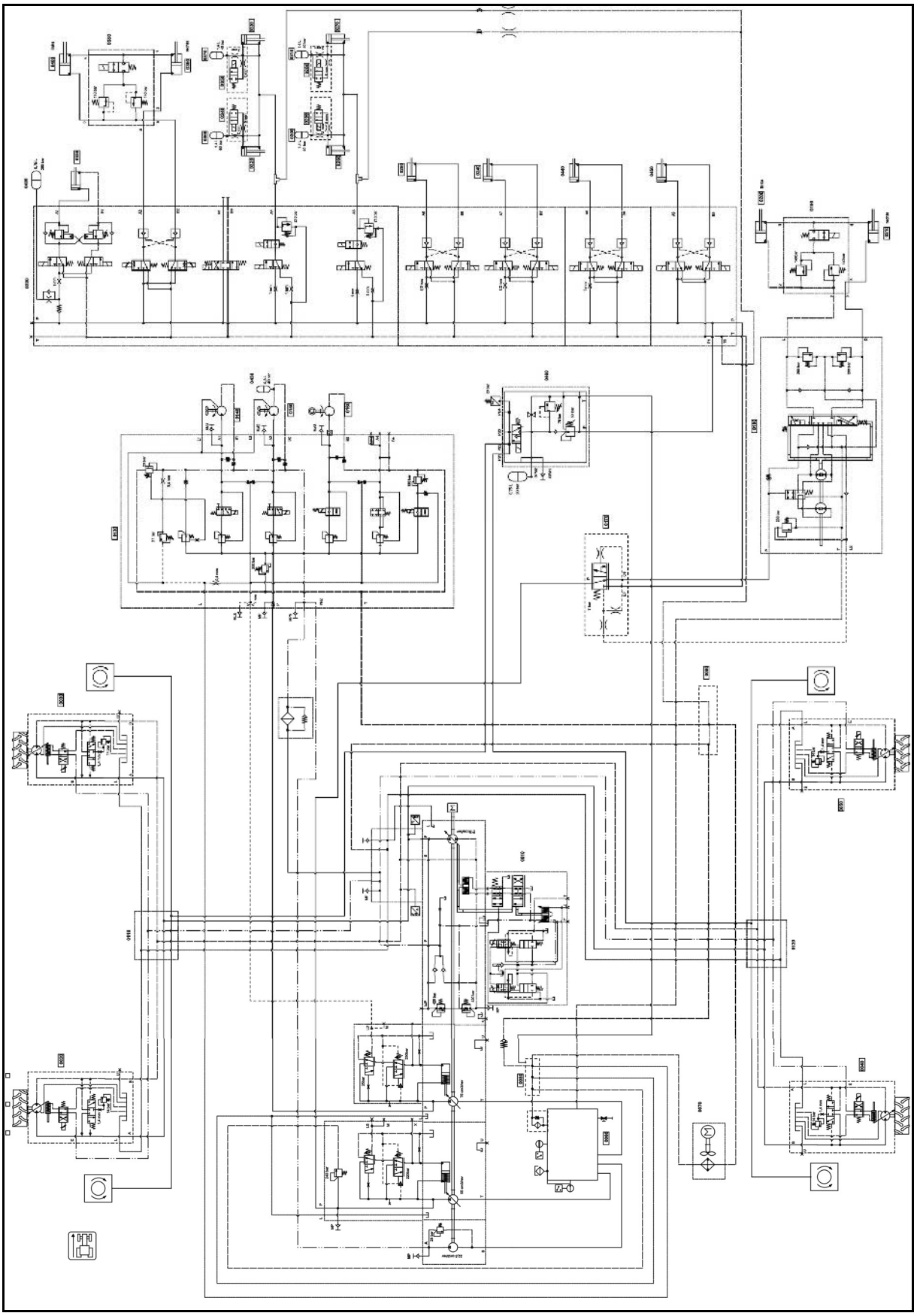

Hydraulic diagram 2

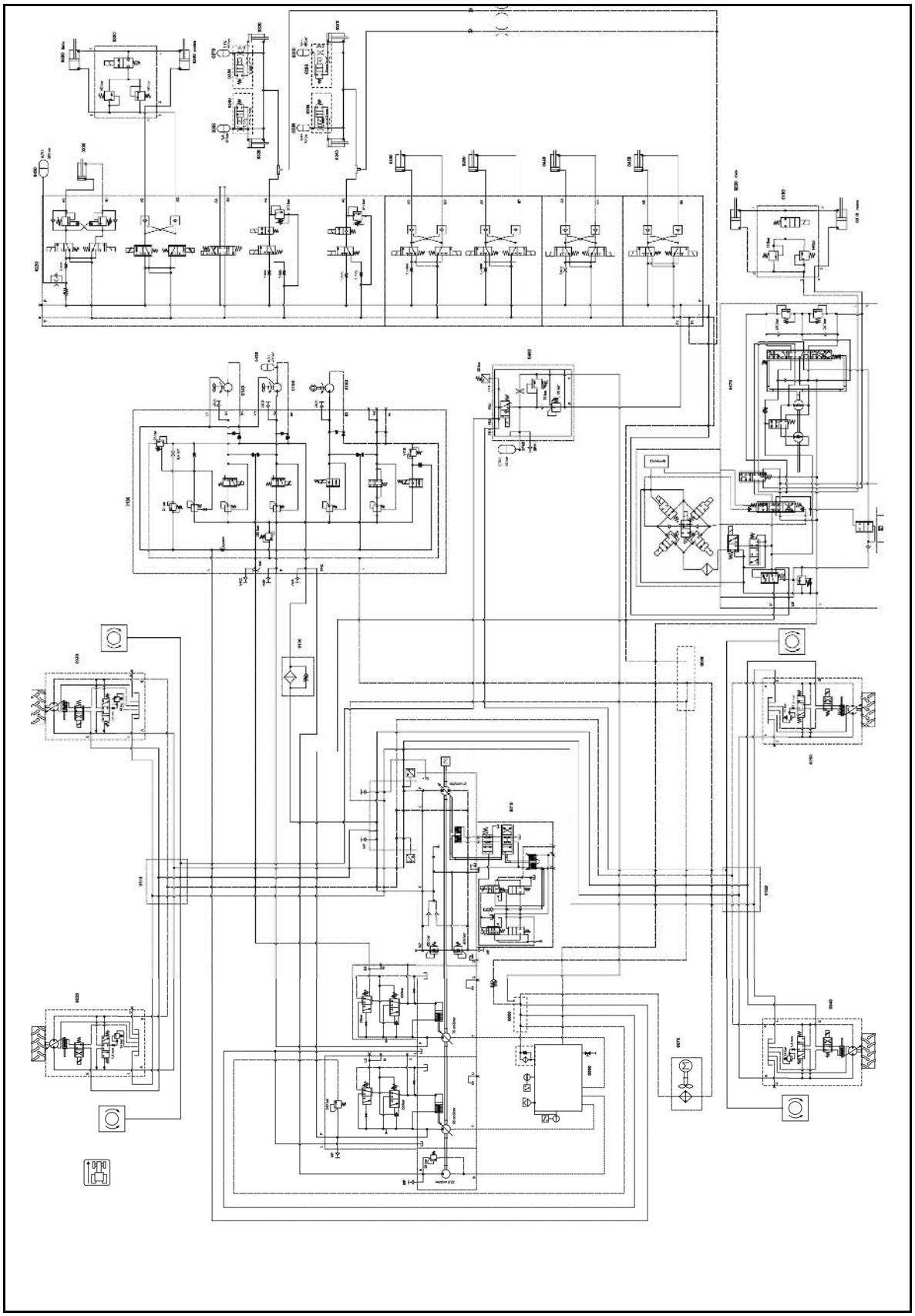

Hydraulic diagram 3

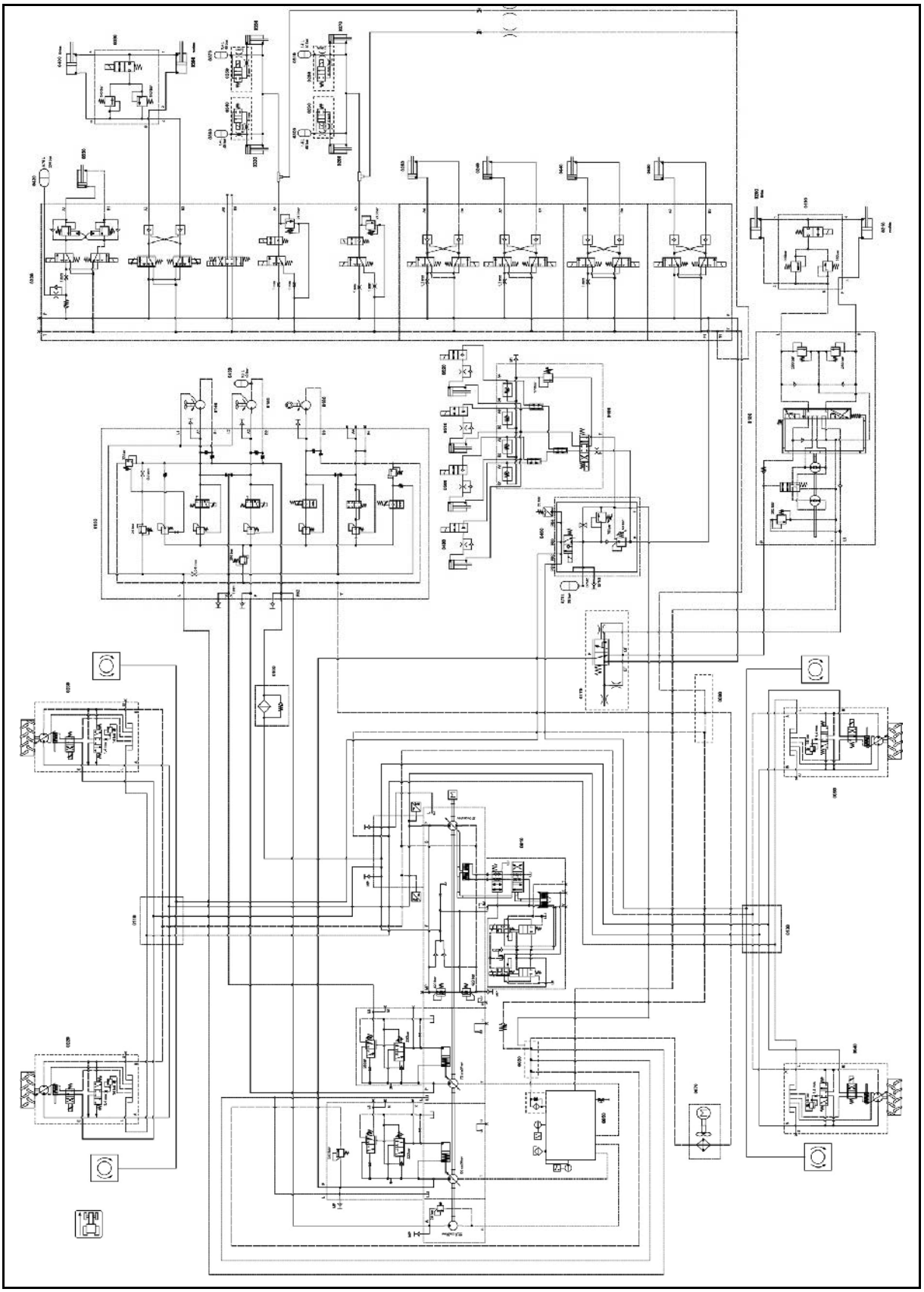

15.4 Pneumatic diagram

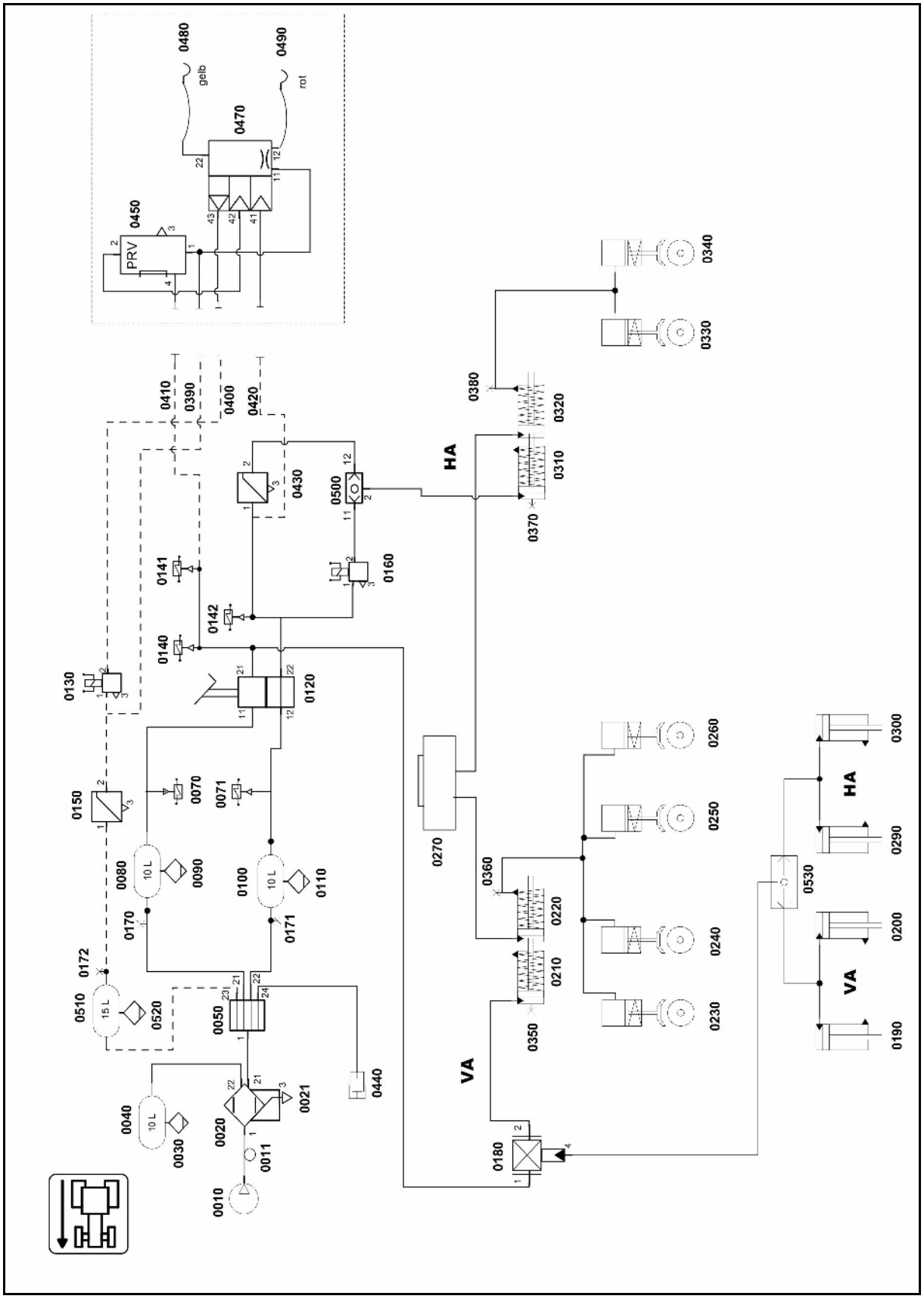

15.5 Overview of fuses and relay

Fuses on the vehicle battery

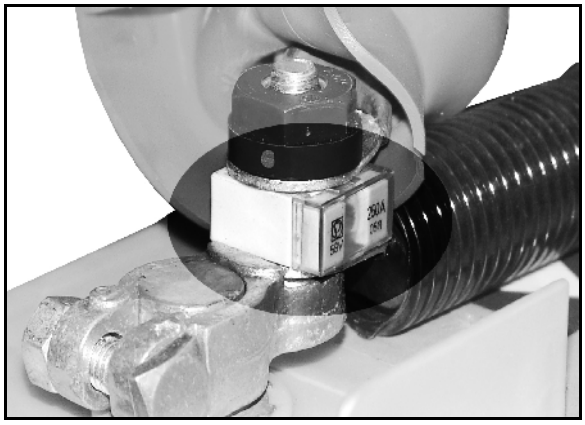

15.5.1 Fuses on the central electrics under the arm rest

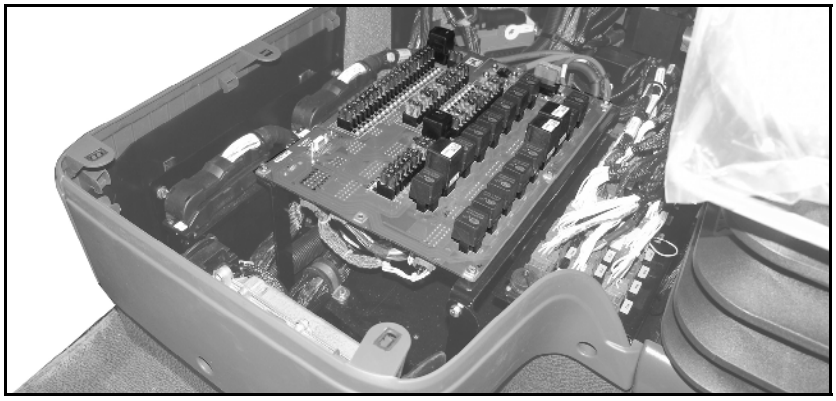

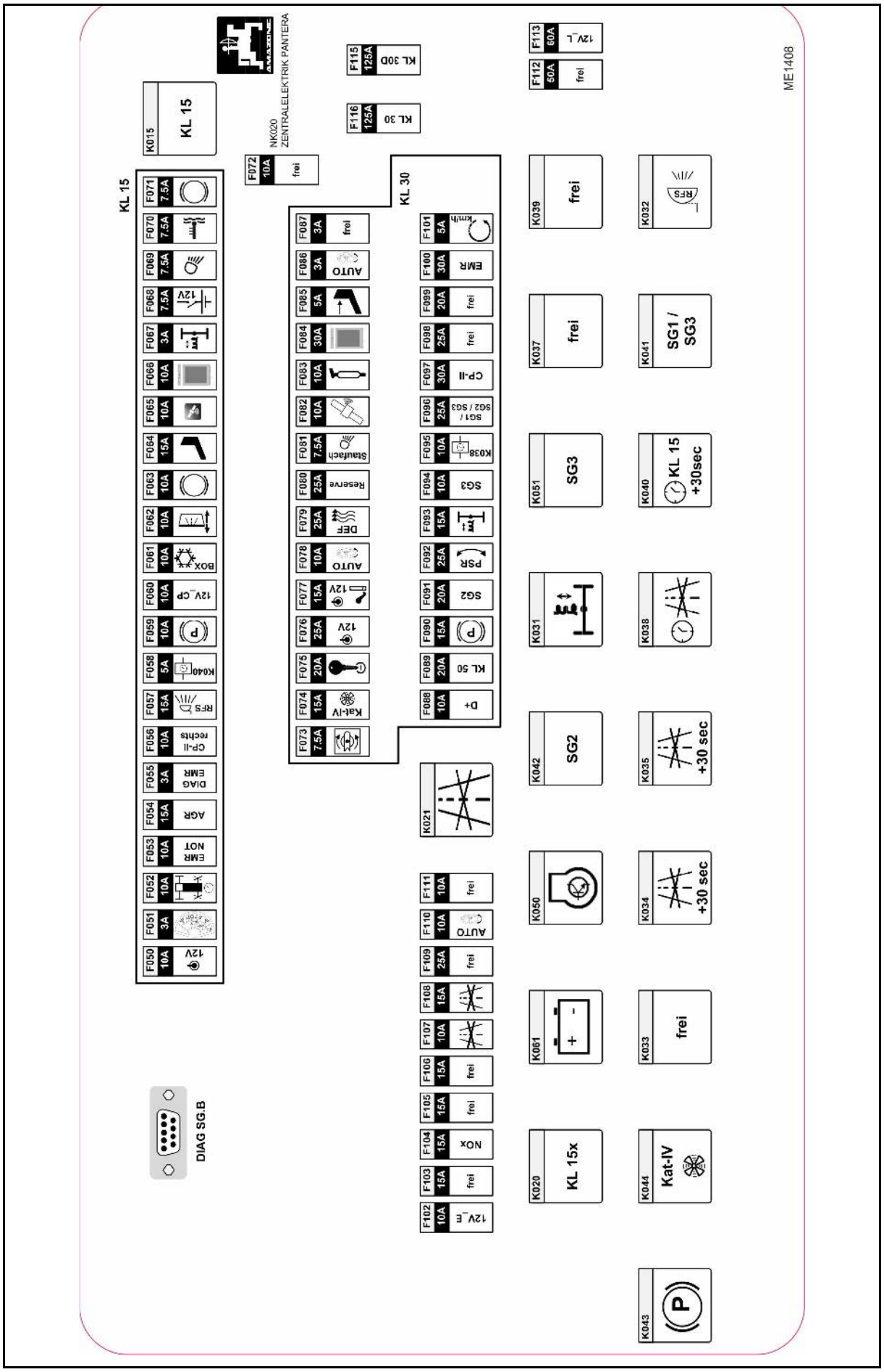
NK020
ZENTRALELEKTRIK PANTERA
KL 15
KL 30
KL 30D
KL 15x
SG1 / SG3
SG2
SG3
KL 15 +30sec
+30 sec
Kat-IV
DIAG SG.B
ME1408

List of fuses under the armrest

Number	Amperage	Function
F050	10 A	12V socket
F051	3 A	Warning light module
F052	10 A	Steering, rear axle
F053	10 A	Emergency shutdown - EMR
F054	15 A	+Ub AGR valve
F055	3 A	Terminal 15 SERDIA diagnosis
F056	10 A	CP-II valves, right
F057	15 A	Reversing headlight/reversing warning signal
F058	5 A	Cl 15 + 30sec
F059	10 A	Parking brake / air dryer sensor
F060	10 A	12V_CP
F061	10 A	Coolbox
F062	10 A	Lift/lower ESB button (OPTIONAL)
F063	10 A	Sensors: brake pressure point/brake pressure/hydraulic tank/high pressure A/high pressure B
F064	15 A	Drivers seat
F065	10 A	GPS antenna (terminal 15)
F066	10 A	AmaDrive switch-on signal
F067	3 A	Height adjustment sensor
F068	7.5A	Battery isolating relay controller
F069	7.5A	Spray liquid valve chest lighting
F070	7.5A	Spray liquid fitting floodlights button/temperature sensors: Hydraulic fluid/water
F071	7.5A	Battery isolating relay (controller)
F072	10 A	12V_E (basic equipment)
F073	7.5A	Electric actuation of the spray agent fitting
F074	15 A	Cat. IV ventilation system
F075	20 A	Ignition lock
F076	25 A	12 V socket (diagnosis)
F077	15 A	Cigar lighter/12V socket
F078	10 A	Steering system (L1)
F079	25 A	SCR / DEF heater
F080	25 A	Spare (terminal 30)
F081	7.5A	Storage compartment light
F082	10 A	GPS antenna
F083	10 A	Revolving beacon / intermediate lubrication
F084	30A	+Ub AmaDrive
F085	5 A	Seat contact
F086	3 A	Automatic steering system (foot switch)
F087	3 A	S045 (spare)
F088	10 A	Charging control signal D+
F089	20 A	Cl 50 EMR (START)

Number	Amperage	Function
F090	15 A	Parking brake
F091	20 A	+Ub CU2
F092	25 A	Reichardt® console motor (OPTIONAL)
F093	15 A	Spring suspension (hard/soft)
F094	10 A	+Ub CU3
F095	10 A	Terminal 15 +30 sec
F096	25 A	+Ub CU1 / CU3
F097	30A	Suction tap/main agitator (CP-II ONLY)
F098	25 A	Boom illumination
F099	20 A	Revolving beacons (OPTIONAL)
F100	30A	+Ub EMR
F101	5 A	Wheel speed sensor 1-4
F102	10 A	12V_E
F103	15 A	Spare
F104	15 A	NOx sensors
F105	15 A	Spare
F106	15 A	Spare
F107	10 A	K038 (Field signal +30 sec)
F108	15 A	Field signal (roof CES)
F109	25 A	Spare
F110	10 A	Steering system (OSPED/SASA) (OPTIONAL)
F111	10 A	Spare
F112	50 A	12V_L
F113	60 A	12V_L
F115	125A	12VDC roof central electrical system
F116	125A	12VDC central electrical system

Relay under the arm rest

Number	Function
K015	Relay terminal 15
K020	Relay terminal 15x
K021	Relay, road/field
K031	Relay, spring suspension
K032	Relay, reversing signal (RS)
K033	Spare relay
K034	Field signal relay I +30 sec
K035	Field signal relay II +30 sec
K037	Spare relay
K038	Field signal relay +30 sec
K039	Spare relay
K040	Time relay, terminal 15 (+30 sec)
K041	Relay +Ub (CU1/CU3)
K042	Relay +Ub (CU2)
K043	Parking brake relay
K044	Relay, Cat. IV
K050	Relay, motor start
K051	Relay +Ub (CU3)
K061	Relay, generator voltage D+

15.5.2 Fuses and relay in the cabin roof

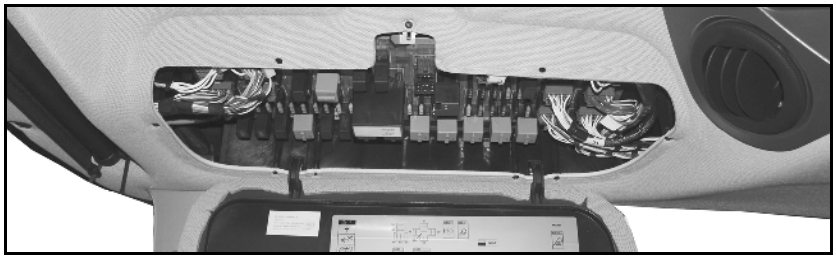

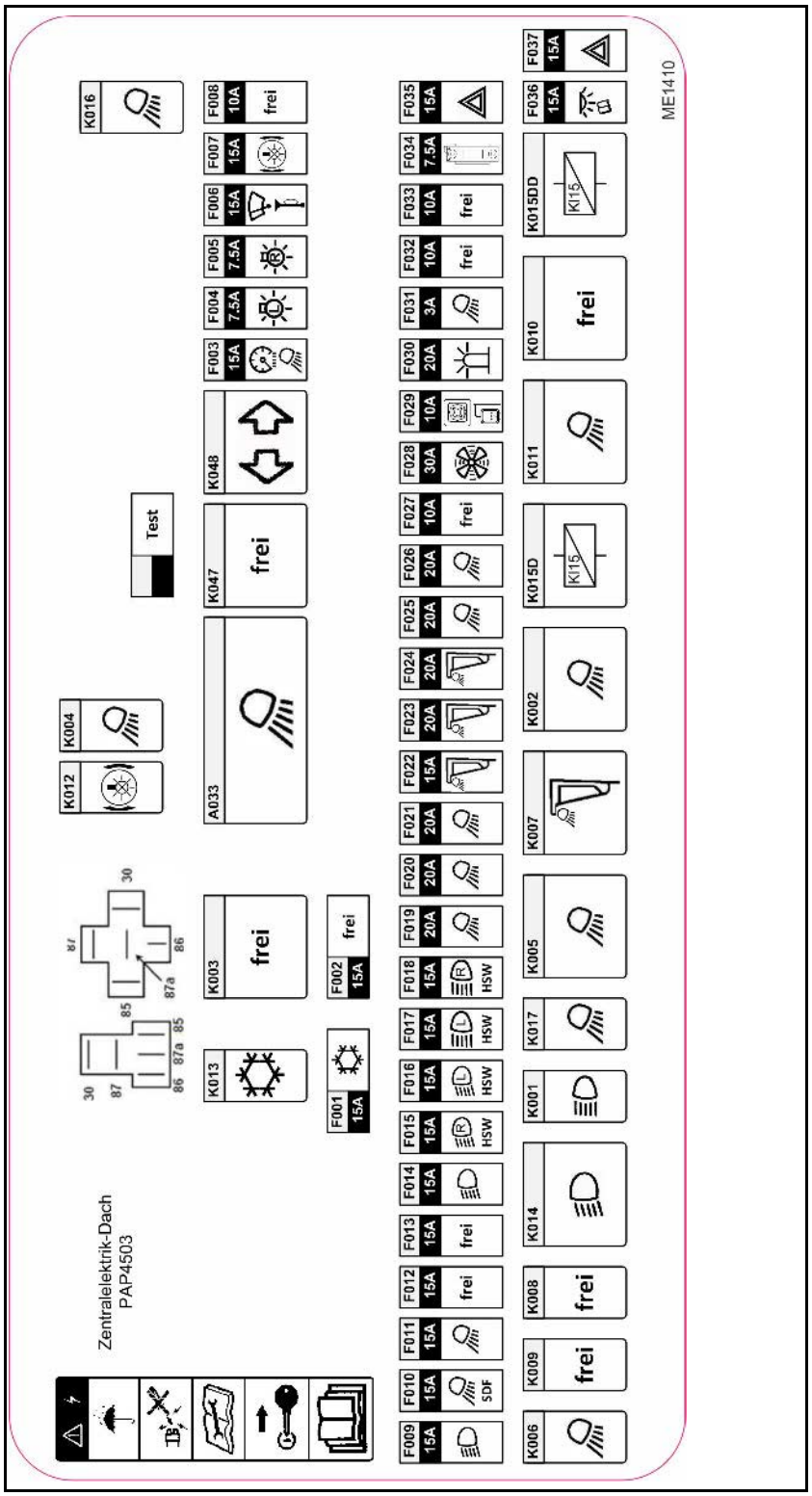

List of the fuses roof

Number	Amperage	Function
F001	15 A	Air conditioner compressor
F002	15 A	spare
F003	7.5 A	Signal "DIPPED BEAM on" for coming home
F004	7.5 A	Side/rear light left side
F005	7.5 A	Side/rear light right side, 3rd rear light
F006	15 A	Windscreen washer system
F007	15 A	Brake light right/left, 3rd brake light,
F008	10 A	spare
F009	15 A	Dipped beam right / left side, high beam right / left side, dashboard / switch lighting
F010	15 A	Sidefinder right / left side
F011	15 A	Work lights platform right side (LIGHT 3 right side)
F012	15 A	spare
F013	15 A	spare
F014	15 A	Signal "DIPPED BEAM on" for SG1
F015	15 A	Dipped beam, right side
F016	15 A	Dipped beam, left side
F017	15 A	High beam, left side
F018	15 A	High beam, right side
F019	20 A	Floodlight, railing, inner left
F020	20 A	Floodlight, railing, outer right
F021	20 A	Work lights platform left side (LIGHT 3 left side)
F022	15 A	Cabin roof work lights, outside right / left side
F023	20 A	Work lights cabin roof left side middle (Xenon lighting left side)
F024	20 A	Work lights cabin roof right side middle (Xenon lighting right side)
F025	20 A	Work lights railing left
F026	20 A	Work lights railing right
F027	10 A	spare
F028	30 A	Air conditioning, fan
F029	10 A	Rear view mirror heating on right / left side, rear view mirror adjustment on right / left side
F030	20 A	Revolving beacon
F031	3 A	Field signal, Sidefinder module (A033)
F032	10 A	spare
F033	10 A	spare
F034	7.5 A	Radio
F035	15 A	Hazard warning lights, indicators
F036	15 A	Reading lamp, Radio
F037	15 A	Hazard warning flashers

New roof relay

Number	Amperage	Function
K001	10 / 20 A	High beam, left / right side
K002	20 / 40 A	Work lights, railing left / right side
K003	20 / 40 A	free
K004	10 / 20 A	Work lights Coming home function
K005	20 / 40 A	Work lights, platform left side
K006	10 / 20 A	Work lights, platform right side
K007	20 / 40 A	Work lights cabin roof front
K008	10 / 20 A	Reserve
K009	10 / 20 A	Reserve
K010	20 / 40 A	Reserve
K011	20 / 40 A	Work lights cabin roof rear, ESB, hydraulic tank
K012	10 / 20 A	Brake light signal
K013	20 / 40 A	Air conditioner compressor
K014	20 / 40 A	Dipped beam, left / right side
K015D	20 / 40 A	Kl 15D (KL15 for roof ZE 544.2)
K015DD	20 / 40 A	Kl 15DD (KL15 for roof ZE)
K016	10 / 20 A	Work lights, railing left / right side
K017	10 / 20 A	Work lights, railing left / right side
K047		free (indicator relay USA)
K048		free (indicator relay USA)

Additional relay (only for CP-II)

Number	Amperage	Function	Location
K300		Suction tap CP-II	E-BOX behind the seat
K301		Main agitator CP-II	

15.5.3 New relay behind the seat

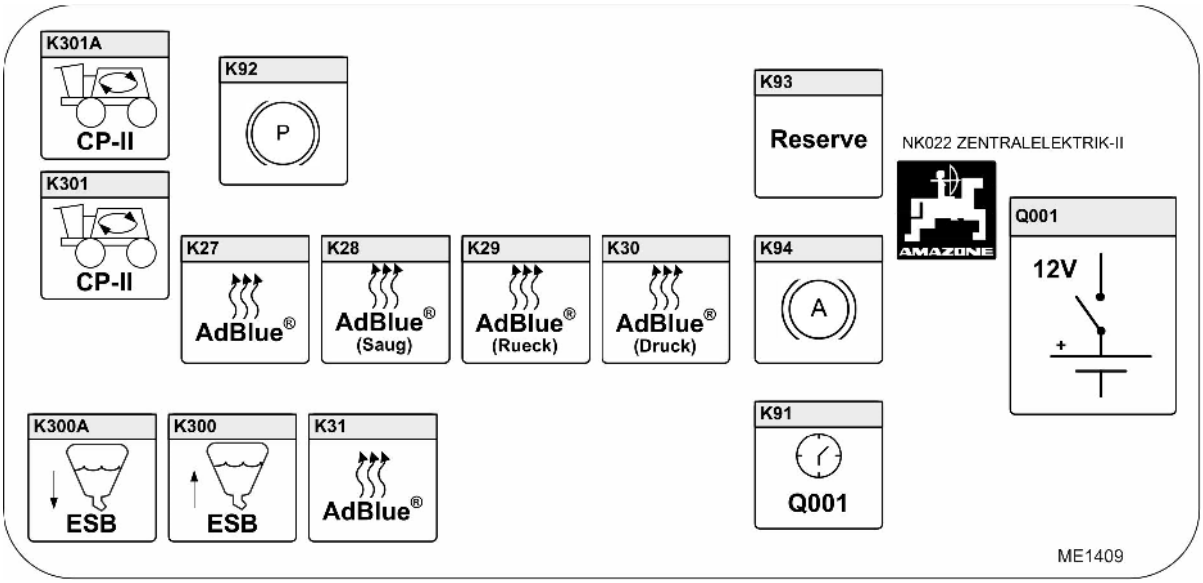

Number	Function
K27	Relay, heating element feed
K28	Relay, heating element 1 (suction line)
K29	Relay, heating element 2 (return flow)
K30	Relay, heating element 3 (pressure line)
K31	Relay, SCR control
K91	Relay, battery management control
K92	Spare relay
K93	Spare relay
K94	Spare relay
K300	Relay, suction tap control
K300A	Relay, suction tap control
K301	Relay, main agitator control
K301A	Relay, main agitator control
Q001	Battery isolating relay

15.5.4 Boom fuses and relays on the control panel

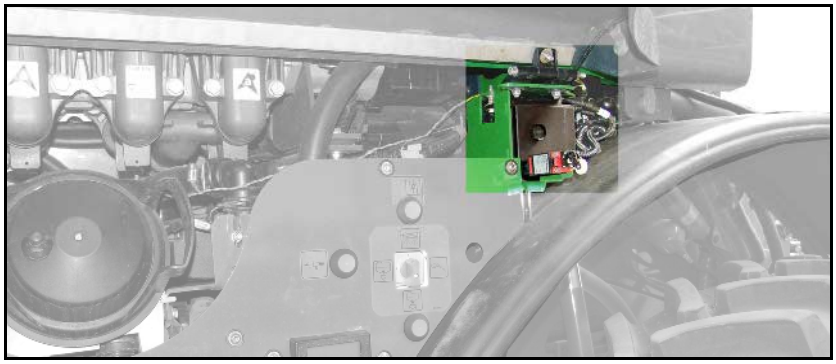

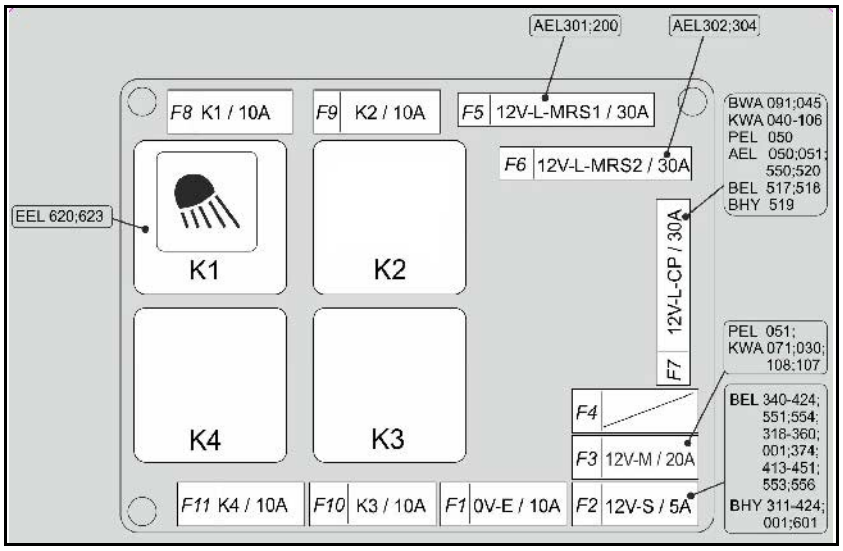

Fuses on the control panel

Number	Amper-age	Function
F1	10 A	OV_E
F2	5 A	12V-L-S Tilting cylinder pressure, right-side
F3	20 A	12V_M
F4	30 A	Spare
F5	30 A	12V_L_MRS1
F6	30 A	12V_L_MRS2
F7	30 A	12V_C_CP
F8	10 A	K1 Boom work floodlights, left-side / surroundings on right-side
F9	10 A	K2
F10	10 A	K3
F11	10 A	K4

Relays on the control panel

Number	Function
K1	K1 Boom work floodlights, left-side / surroundings on right-side
K2	spare
K3	spare
K4	spare

15.5.5 Boom illumination in the cab, rear right

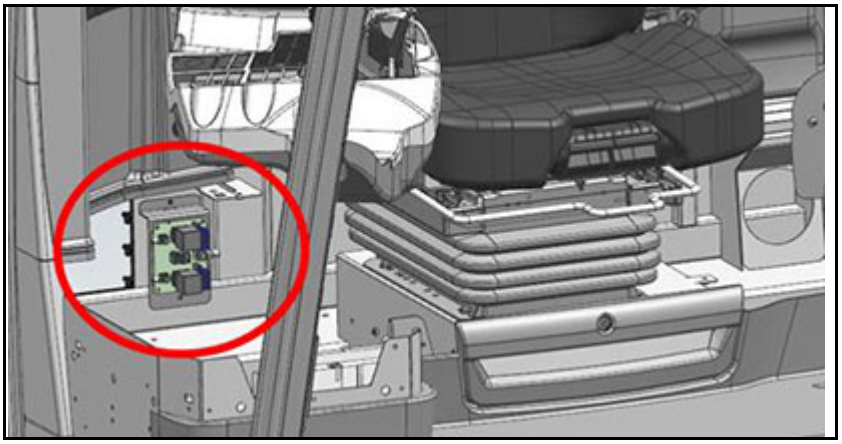

Fuses in the cab, rear right

Number	Am-perage	Function
F302	60 A	12V_L_Sprayer
F303	60 A	K303

Relays in the cab, rear right

Number	Function
K302	12V_L_Sprayer
K303	Spare

15.6 Screw tightening torques

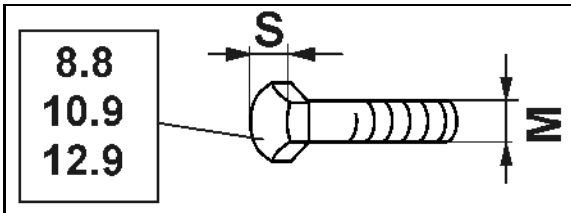

M	S	Nm 8.8	Nm 10.9	Nm 12.9
M 8	13	25	35	41
M 8x1		27	38	41
M 10	16 (17)	49	69	83
M 10x1		52	73	88
M 12	18 (19)	86	120	145
M 12x1.5		90	125	150
M 14	22	135	190	230
M 14x1.5		150	210	250
M 16	24	210	300	355
M 16x1.5		225	315	380
M 18	27	290	405	485
M 18x1.5		325	460	550
M 20	30	410	580	690
M 20x1.5		460	640	770
M 22	32	550	780	930
M 22x1.5		610	860	1050
M 24	36	710	1000	1200
M 24x2		780	1100	1300
M 27	41	1050	1500	1800
M 27x2		1150	1600	1950
M 30	46	1450	2000	2400
M 30x2		1600	2250	2700

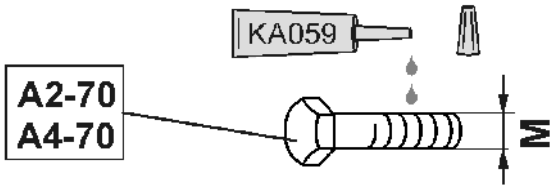

M	M4	M5	M6	M8	M10	M12	M14	M16	M18	M20	M22	M24
Nm	2,4	4,9	8,4	20,6	40,7	70,5	112	174	242	342	470	589

Coated bolts have different tightening torques.

Observe the specific data for tightening torques in the maintenance section.

16 Spray table

16.1 Spray tables for flat-fan, anti-drift, injector and airmix nozzles, spraying height 50 cm

- The spray rates [l/ha] listed in the spray tables are only valid for water. To convert the spray rates given into AUS, multiply these by 0.88 and, for NP solutions, by 0.85.
- The table on page 286 serves to select the suitable nozzle type. The nozzle type is determined by
  - the intended forward speed,
  - the required spray rate and
  - the required atomisation characteristic (fine, medium or coarse-dropped) of the crop protection agent used for the crop protection measure.
- The spray table on page 288 serves to
  - determine the nozzle size.
  - determine the required spray pressure.
  - determine the required individual nozzle output for calibrating the field sprayer.

Permissible pressure ranges for different nozzle types and sizes

Nozzle type		Manufacturer	Permissible pressure range [bar]	
			min. pressure	max. pressure
XRC		TeeJet	1	5
AD		Lechler	1,5	5
Air Mix		agrotop	1	6
IDK / IDKN		Lechler	1	6
IDKT			1,5	6
ID3	**01 - 015**		3	8
ID3	**02 - 08**		2	8
IDTA 120			1	8
AI		TeeJet	2	8
TTI			1	7
AVI Twin		agrotop	2	8
TD Hi Speed			2	10

For further information about the nozzle characteristics, see the nozzle manufacturer's website.

www.agrotop.com / www.lechler-agri.de / www.teejet.com

Selecting the nozzle type

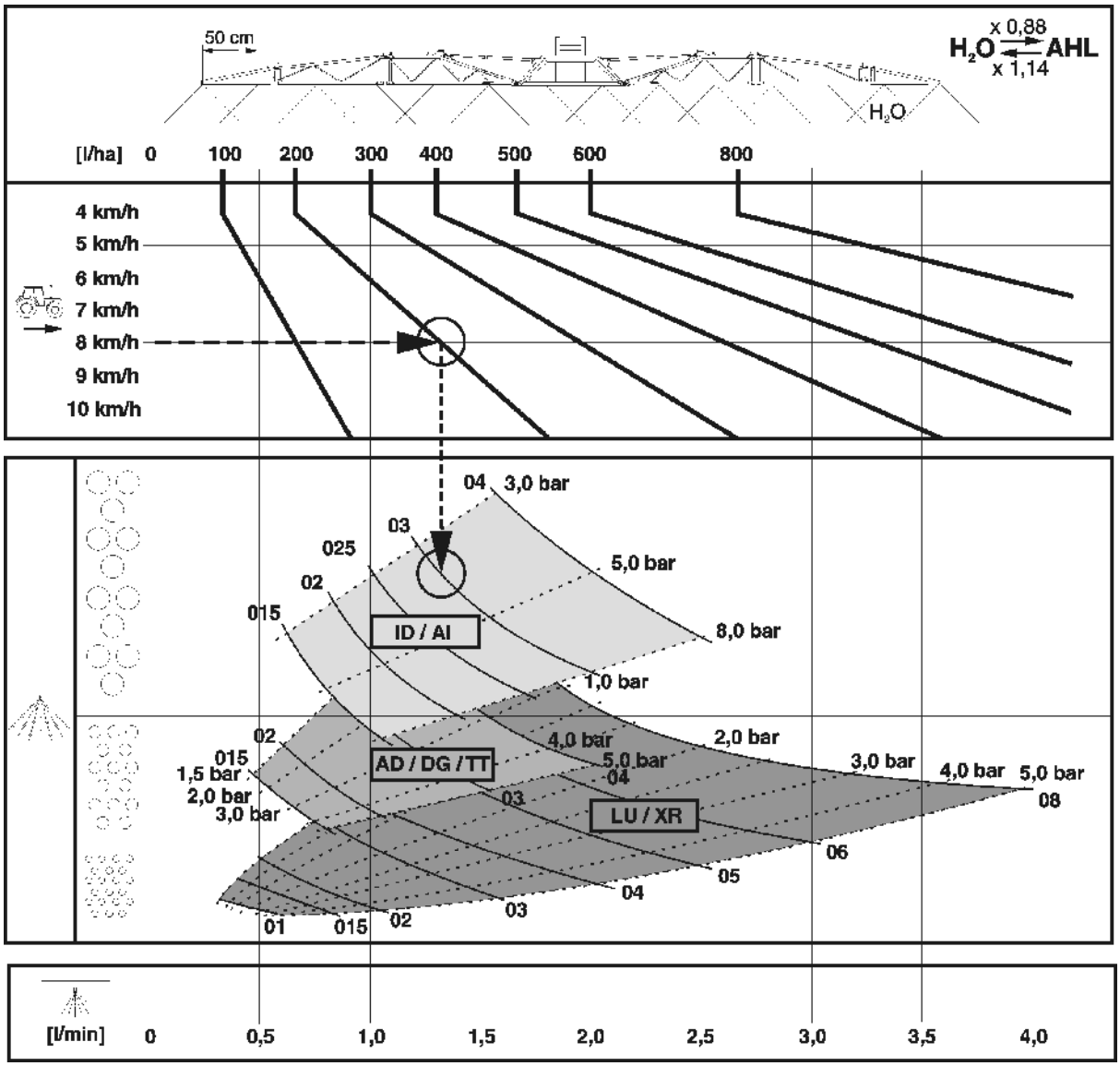

Example:

Required spray rate:	**200 l/ha**
Intended operational speed:	**8 km/h**
Required atomisation characteristic for the crop protection measure:	**coarse-dropped** (fine drifting)
Required nozzle type:	?
Required nozzle size:	?
Required spray pressure:	? bar
Required individual nozzle output for calibrating the field sprayer:	? l/min

Determining the nozzle type, nozzle size, spray pressure and individual nozzle output

1. Determine the working point for the required spray rate (**200 l/ha**) and the intended operational speed (**8 km/h**).
2. At the working point, trace a line down the table. Depending on the position of the working point, this line will run through the cells for various nozzle types.
3. Select the best nozzle type for the crop protection measure in question, with reference to the required atomisation characteristic (fine, medium or coarse-dropped).

→ Nozzle choice for the example given above:

→ Nozzle type: **AI or ID**

4. Go to the spray table, see on page 288.
5. In the column with the intended operational speed (**8 km/h**), find the required spray rate (**200 l/ha**) or a figure which is as close as possible to the required spray rate (in this case, for example, **195 l/ha**).
6. In the line with the required spray rate (**195 l/ha**),
   - read the nozzle sizes in question. Select a suitable nozzle size (e.g.**'03'**).
   - where the nozzle size column intersects with the selected nozzle size, read the required spray pressure (e.g. **3.7 bar**).
   - read the required individual nozzle output (**1.3 l/min**) for calibrating the field sprayer.

Required nozzle type:	**AI / ID**
Required nozzle size:	**'03'**
Required spray pressure:	**3.7 bar**
Required individual nozzle output for calibrating the field sprayer:	**1.3 l/min**

50 cm

H_2O — l/ha

6	6,5	7	7,5	8	8,5	9	10	11	12	14	16	l/min	bar 015	02	025	03	04	05	06	08
← km/h																				
80	74	69	64	60	56	53						0,4	1,4							
100	92	86	80	75	71	67	60	55				0,5	2,2	1,2						
120	111	103	96	90	85	80	72	65	60	51		0,6	3,1	1,8	1,1					
140	129	120	112	105	99	93	84	76	70	60	53	0,7	4,2	2,4	1,5	1,1				
160	148	137	128	120	113	107	96	87	80	69	60	0,8	5,5	3,1	2,0	1,4				
180	166	154	144	135	127	120	108	98	90	77	68	0,9	7,0	4,0	2,5	1,8	1,0			
200	185	171	160	150	141	133	120	109	100	86	75	1,0		4,9	3,1	2,2	1,2			
220	203	189	176	165	155	147	132	120	110	94	83	1,1		5,9	3,7	2,7	1,5	1,0		
240	222	206	192	180	169	160	144	131	120	103	90	1,2		7,0	4,4	3,2	1,8	1,1		
260	240	223	208	195	184	173	156	142	130	111	98	1,3			5,2	3,7	2,1	1,3	1,0	
280	259	240	224	210	198	187	168	153	140	120	105	1,4			6,0	4,3	2,4	1,6	1,1	
300	277	257	240	225	212	200	180	164	150	129	113	1,5			6,9	5,0	2,8	1,8	1,2	
320	295	274	256	240	226	213	192	175	160	137	120	1,6				5,7	3,2	2,0	1,4	
340	314	291	272	255	240	227	204	185	170	146	128	1,7				6,4	3,6	2,3	1,6	
360	332	309	288	270	254	240	216	196	180	154	135	1,8				7,2	4,0	2,6	1,8	1,0
380	351	326	304	285	268	253	228	207	190	163	143	1,9					4,5	2,9	2,0	1,1
400	369	343	320	300	282	267	240	218	200	171	150	2,0					4,9	3,2	2,2	1,2
420	388	360	336	315	297	280	252	229	210	180	158	2,1					5,4	3,5	2,4	1,4
440	406	377	352	330	311	293	264	240	220	189	165	2,2					6,0	3,8	2,7	1,5
460	425	394	368	345	325	307	276	251	230	197	173	2,3					6,5	4,2	2,9	1,6
480	443	411	384	360	339	320	288	262	240	206	180	2,4					7,1	4,6	3,2	1,8
500	462	429	400	375	353	333	300	273	250	214	188	2,5						5,0	3,4	1,9
520	480	446	416	390	367	347	312	284	260	223	195	2,6						5,4	3,7	2,1
540	499	463	432	405	381	360	324	295	270	231	203	2,7						5,8	4,0	2,3
560	517	480	448	420	395	373	336	305	280	240	210	2,8						6,2	4,3	2,4
580	535	497	464	435	409	387	348	316	290	249	218	2,9						6,7	4,6	2,6
600	554	514	480	450	424	400	360	327	300	257	225	3,0						7,1	5,0	2,8
620	572	531	496	465	438	413	372	338	310	266	233	3,1								3,0
640	591	549	512	480	452	427	384	349	320	274	240	3,2								3,2
660	609	566	528	495	466	440	396	360	330	283	248	3,3								3,4
680	628	583	544	510	480	453	408	371	340	291	255	3,4								3,6
700	646	600	560	525	494	467	420	382	350	300	263	3,5								3,8
720	665	617	576	540	508	480	432	393	360	309	270	3,6								4,0
740	683	634	592	555	522	493	444	404	370	318	278	3,7								4,3
x 0,88			608	570	537	507	456	415	380	326	285	3,8								4,5
H_2O ⇄ AHL			624	585	551	520	468	425	390	335	293	3,9								4,7
x 1,14			640	600	565	533	480	436	400	343	300	4,0								5,0

LU / XR: 1 – 5 bar
AD: 1,5 – 6 bar
ID / AI: 2 – 8 bar
IDK / Air Mix: 1 – 6 bar
TTI: 1 – 7 bar

ME 735

16.2 Spraying nozzles for liquid manure

Nozzle type	Manufacturer	Permissible pressure range [bar]	
		min. pressure	max. pressure
3- jet	agrotop	2	8
7- hole	TeeJet	1.5	4
FD	Lechler	1.5	4
Drag hose	AMAZONE	1	4

16.2.1 Spray table for three-ray nozzles, spraying height 120 cm

AMAZONE - Spray table for three-ray nozzles (yellow)

Pressure	Nozzle output		AUS spray rate (l/ha) /								
	Water	AUS	6	7	8	9	10	11	12	14	16
(bar)	(l/min)		km/h								
1,0	0,36	0,32	**64**	**55**	**48**	**43**	**39**	**35**	**32**	**28**	**24**
1,2	0,39	0,35	**69**	**60**	**52**	**47**	**42**	**38**	**35**	**30**	**26**
1,5	0,44	0,39	**78**	**67**	**59**	**53**	**47**	**43**	**39**	**34**	**30**
1,8	0,48	0,42	**85**	**73**	**64**	**57**	**51**	**47**	**43**	**37**	**32**
2,0	0,50	0,44	**88**	**75**	**66**	**59**	**53**	**48**	**44**	**38**	**33**
2,2	0,52	0,46	**92**	**78**	**69**	**62**	**55**	**50**	**46**	**39**	**35**
2,5	0,55	0,49	**98**	**84**	**74**	**66**	**57**	**54**	**49**	**52**	**37**
2,8	0,58	0,52	**103**	**88**	**77**	**69**	**62**	**56**	**52**	**44**	**39**
3,0	0,60	0,53	**106**	**91**	**80**	**71**	**64**	**58**	**53**	**46**	**40**

AMAZONE - Spray table for three-ray nozzles (red)

Pressure	Nozzle output		AUS spray rate (l/ha) /								
	Water	AUS	6	7	8	9	10	11	12	14	16
(bar)	(l/min)		km/h								
1.0	0.61	0.54	**108**	**93**	**81**	**72**	**65**	**59**	**54**	**47**	**41**
1.2	0.67	0.59	**118**	**101**	**88**	**78**	**70**	**64**	**59**	**51**	**44**
1.5	0.75	0.66	**132**	**114**	**99**	**88**	**79**	**72**	**66**	**57**	**50**
1.8	0.79	0.69	**138**	**119**	**104**	**92**	**83**	**76**	**69**	**60**	**52**
2.0	0.81	0.71	**142**	**122**	**107**	**95**	**85**	**78**	**71**	**61**	**54**
2.2	0.84	0.74	**147**	**126**	**111**	**98**	**88**	**80**	**74**	**63**	**56**
2.5	0.89	0.78	**155**	**133**	**117**	**104**	**93**	**84**	**78**	**67**	**59**
2.8	0.93	0.82	**163**	**140**	**122**	**109**	**98**	**87**	**82**	**70**	**61**
3.0	0.96	0.84	**168**	**144**	**126**	**112**	**101**	**92**	**84**	**72**	**63**

AMAZONE - Spray table for three-ray nozzles (blue)

Pres-sure	Nozzle output		AUS spray rate (l/ha) /								
	Water	AUS	6	7	8	9	10	11	12	14	16
(bar)	(l/min)		km/h								
1.0	0.86	0.76	**152**	**130**	**114**	**101**	**91**	**83**	**76**	**65**	**57**
1.2	0.94	0.83	**166**	**142**	**124**	**110**	**99**	**91**	**83**	**71**	**62**
1.5	1.05	0.93	**186**	**159**	**140**	**124**	**112**	**102**	**93**	**80**	**70**
1.8	1.11	0.98	**196**	**167**	**147**	**131**	**117**	**107**	**98**	**84**	**74**
2.0	1.15	1.01	**202**	**173**	**152**	**135**	**121**	**110**	**101**	**87**	**76**
2.2	1.20	1.06	**212**	**182**	**159**	**141**	**127**	**116**	**106**	**91**	**80**
2.5	1.26	1.12	**224**	**192**	**168**	**149**	**135**	**122**	**112**	**96**	**84**
2.8	1.32	1.17	**234**	**201**	**176**	**156**	**141**	**128**	**117**	**101**	**88**
3.0	1.36	1.20	**240**	**206**	**180**	**160**	**144**	**131**	**120**	**103**	**90**

AMAZONE - Spray table for three-ray nozzles (white)

Pres-sure	Nozzle output		AUS spray rate (l/ha) /								
	Water	AUS	6	7	8	9	10	11	12	14	16
(bar)	(l/min)		km/h								
1.0	1.16	1.03	**206**	**177**	**155**	**137**	**124**	**213**	**103**	**89**	**78**
1.2	1.27	1.12	**224**	**192**	**168**	**149**	**134**	**222**	**112**	**96**	**84**
1.5	1.42	1.26	**252**	**217**	**190**	**168**	**151**	**138**	**126**	**109**	**95**
1.8	1.56	1.38	**277**	**237**	**207**	**184**	**166**	**151**	**139**	**119**	**104**
2.0	1.64	1.45	**290**	**249**	**217**	**193**	**174**	**158**	**145**	**125**	**109**
2.2	1.73	1.54	**307**	**263**	**230**	**204**	**185**	**168**	**154**	**132**	**115**
2.5	1.84	1.62	**325**	**279**	**244**	**216**	**195**	**178**	**163**	**140**	**122**
2.8	1.93	1.71	**342**	**293**	**256**	**228**	**205**	**187**	**171**	**147**	**128**
3.0	2.01	1.78	**356**	**305**	**267**	**237**	**214**	**194**	**178**	**153**	**134**

16.2.2 Spray table for 7-hole nozzles

AMAZONE Spray table for 7-hole nozzle SJ7-02VP (yellow)

Pres-sure	Nozzle output per dosing disc		AUS spray rate AHL (l/ha) /								
	Wasser	AHL	6	7	8	9	10	11	12	14	16
(bar)	(l/min)		km/h								
1,5	0,55	0,49	**98**	**84**	**74**	**65**	**59**	**53**	**49**	**42**	**37**
2,0	0,64	0,57	**114**	**98**	**86**	**76**	**68**	**62**	**57**	**49**	**43**
2,5	0,72	0,64	**128**	**110**	**96**	**85**	**77**	**70**	**64**	**55**	**48**
3,0	0,80	0,71	**142**	**122**	**107**	**95**	**85**	**77**	**71**	**61**	**53**
3,5	0,85	0,75	**150**	**129**	**113**	**100**	**90**	**82**	**75**	**64**	**56**
4,0	0,93	0,82	**164**	**141**	**123**	**109**	**98**	**89**	**82**	**70**	**62**

AMAZONE Spray table for 7-hole nozzle SJ7-03VP (blue)

Pres-sure	Nozzle output per dosing disc		AUS spray rate AHL (l/ha) /								
	Wasser	AHL	6	7	8	9	10	11	12	14	16
(bar)	(l/min)		km/h								
1,5	0,87	0,77	**154**	**132**	**116**	**103**	**92**	**84**	**77**	**66**	**58**
2,0	1,00	0,88	**176**	**151**	**132**	**117**	**106**	**96**	**88**	**75**	**66**
2,5	1,10	0,97	**194**	**166**	**146**	**129**	**116**	**106**	**97**	**83**	**73**
3,0	1,18	1,04	**208**	**178**	**156**	**139**	**125**	**113**	**104**	**89**	**78**
3,5	1,27	1,12	**224**	**192**	**168**	**149**	**134**	**122**	**112**	**96**	**84**
4,0	1,31	1,16	**232**	**199**	**174**	**155**	**139**	**127**	**116**	**99**	**87**

AMAZONE Spray table for 7-hole nozzle SJ7-04VP (red)

Pres-sure	Nozzle output per dosing disc		AUS spray rate AHL (l/ha) /								
	Wasser	AHL	6	7	8	9	10	11	12	14	16
(bar)	(l/min)		km/h								
1,5	1,17	1,04	**208**	**178**	**156**	**139**	**125**	**113**	**104**	**89**	**78**
2,0	1,33	1,18	**236**	**202**	**177**	**157**	**142**	**129**	**118**	**101**	**89**
2,5	1,45	1,28	**256**	**219**	**192**	**171**	**154**	**140**	**128**	**110**	**96**
3,0	1,55	1,37	**274**	**235**	**206**	**183**	**164**	**149**	**137**	**117**	**103**
3,5	1,66	1,47	**295**	**253**	**221**	**196**	**177**	**161**	**147**	**126**	**110**
4,0	1,72	1,52	**304**	**261**	**228**	**203**	**182**	**166**	**152**	**130**	**114**

AMAZONE Spray table for 7-hole nozzle SJ7-05VP (brown)

Pres-sure	Nozzle output per dosing disc		AUS spray rate AHL (l/ha) /								
	Wasser	AHL	6	7	8	9	10	11	12	14	16
(bar)	(l/min)		km/h								
1,5	1,49	1,32	**264**	**226**	**198**	**176**	**158**	**144**	**132**	**113**	**99**
2,0	1,68	1,49	**298**	**255**	**224**	**199**	**179**	**163**	**149**	**128**	**112**
2,5	1,83	1,62	**324**	**278**	**243**	**216**	**194**	**177**	**162**	**139**	**122**
3,0	1,95	1,73	**346**	**297**	**260**	**231**	**208**	**189**	**173**	**148**	**130**
3,5	2,11	1,87	**374**	**321**	**281**	**249**	**224**	**204**	**187**	**160**	**140**
4,0	2,16	1,91	**382**	**327**	**287**	**255**	**229**	**208**	**191**	**164**	**143**

AMAZONE Spray table for 7-hole nozzle SJ7-06VP (grey)

Pres-sure	Nozzle output per dosing disc		AUS spray rate AHL (l/ha) /								
	Wasser	AHL	6	7	8	9	10	11	12	14	16
(bar)	(l/min)		km/h								
1,5	1,77	1,57	**314**	**269**	**236**	**209**	**188**	**171**	**157**	**135**	**118**
2,0	2,01	1,78	**356**	**305**	**267**	**237**	**214**	**194**	**178**	**153**	**134**
2,5	2,19	1,94	**388**	**333**	**291**	**259**	**233**	**212**	**194**	**166**	**146**
3,0	2,35	2,08	**416**	**357**	**312**	**277**	**250**	**227**	**208**	**178**	**156**
4,0	2,61	2,31	**562**	**396**	**347**	**308**	**277**	**252**	**231**	**198**	**173**

AMAZONE Spray table for 7-hole nozzle SJ7-08VP (white)

Pres-sure	Nozzle output per dosing disc		AUS spray rate AHL (l/ha) /								
	Wasser	AHL	6	7	8	9	10	11	12	14	16
(bar)	(l/min)		km/h								
1,5	2,28	2,02	**404**	**346**	**303**	**269**	**242**	**220**	**202**	**173**	**152**
2,0	2,66	2,35	**470**	**403**	**353**	**313**	**282**	**256**	**235**	**201**	**176**
2,5	2,94	2,60	**520**	**446**	**390**	**347**	**312**	**284**	**260**	**223**	**195**
3,0	3,15	2,79	**558**	**478**	**419**	**372**	**335**	**304**	**279**	**239**	**209**
4,0	3,46	3,06	**612**	**525**	**459**	**408**	**367**	**334**	**306**	**262**	**230**

16.2.3 Spray table for FD- nozzles

AMAZONE Spray table for FD-04- nozzle

Pres-sure	Nozzle output per dosing disc		AUS spray rate AHL (l/ha) /								
	Water	AHL	6	7	8	9	10	11	12	14	16
(bar)	(l/min)		km/h								
1,5	1,13	1,00	**200**	**171**	**150**	**133**	**120**	**109**	**100**	**86**	**75**
2,0	1,31	1,15	**230**	**197**	**173**	**153**	**138**	**125**	**115**	**99**	**86**
2,5	1,46	1,29	**258**	**221**	**194**	**172**	**155**	**141**	**129**	**111**	**97**
3,0	1,60	1,41	**282**	**241**	**211**	**188**	**169**	**154**	**141**	**121**	**106**
4,0	1,85	1,63	**326**	**279**	**245**	**217**	**196**	**178**	**163**	**140**	**122**

AMAZONE Spray table for FD-05- nozzle

Pres-sure	Nozzle output per dosing disc		AUS spray rate AHL (l/ha) /								
	Water	AHL	6	7	8	9	10	11	12	14	16
(bar)	(l/min)		km/h								
1,5	1,41	1,24	**248**	**213**	**186**	**165**	**149**	**135**	**124**	**106**	**93**
2,0	1,63	1,44	**288**	**247**	**216**	**192**	**173**	**157**	**144**	**123**	**108**
2,5	1,83	1,61	**322**	**276**	**242**	**215**	**193**	**176**	**161**	**138**	**121**
3,0	2,00	1,76	**352**	**302**	**264**	**235**	**211**	**192**	**176**	**151**	**132**
4,0	2,31	2,03	**406**	**348**	**305**	**271**	**244**	**221**	**203**	**174**	**152**

AMAZONE Spray table for FD-06- nozzle

Pres-sure	Nozzle output per dosing disc		AUS spray rate AHL (l/ha) /								
	Water	AHL	6	7	8	9	10	11	12	14	16
(bar)	(l/min)		km/h								
1,5	1,70	1,49	**298**	**255**	**224**	**199**	**179**	**163**	**149**	**128**	**112**
2,0	1,96	1,72	**344**	**295**	**258**	**229**	**206**	**188**	**172**	**147**	**129**
2,5	2,19	1,93	**386**	**331**	**290**	**257**	**232**	**211**	**193**	**165**	**145**
3,0	2,40	2,11	**422**	**362**	**317**	**282**	**253**	**230**	**211**	**181**	**158**
4,0	2,77	2,44	**488**	**418**	**366**	**325**	**293**	**266**	**244**	**209**	**183**

AMAZONE Spray table for FD-08- nozzle

Pres-sure	Nozzle output per dosing disc		AUS spray rate AHL (l/ha) /								
	Water	AHL	6	7	8	9	10	11	12	14	16
(bar)	(l/min)		km/h								
1,5	2,26	1,99	**398**	**341**	**299**	**265**	**239**	**217**	**199**	**171**	**149**
2,0	2,61	2,30	**460**	**394**	**345**	**307**	**276**	**251**	**230**	**197**	**173**
2,5	2,92	2,57	**514**	**441**	**386**	**343**	**308**	**280**	**257**	**220**	**193**
3,0	3,20	2,82	**563**	**483**	**422**	**375**	**338**	**307**	**282**	**241**	**211**
4,0	3,70	3,25	**650**	**557**	**488**	**433**	**390**	**355**	**325**	**279**	**244**

AMAZONE Spray table for FD-10- nozzle

Pres-sure	Nozzle output per dosing disc		AUS spray rate AHL (l/ha) /								
	Water	AHL	6	7	8	9	10	11	12	14	16
(bar)	(l/min)		km/h								
1,5	2,83	2,49	**498**	**427**	**374**	**332**	**299**	**272**	**249**	**214**	**187**
2,0	3,27	2,88	**576**	**494**	**432**	**384**	**345**	**314**	**288**	**246**	**216**
2,5	3,65	3,21	**642**	**551**	**482**	**429**	**385**	**350**	**321**	**275**	**241**
3,0	4,00	3,52	**704**	**604**	**528**	**469**	**422**	**384**	**352**	**302**	**264**
4,0	4,62	4,07	**813**	**697**	**610**	**542**	**488**	**444**	**407**	**348**	**305**

16.2.4 Spray table for drag hose unit

AMAZONE Spray table for dosing disc 4916-26, (dia. 0.65 mm)

Pres-sure	Nozzle output per dosing disc		AUS spray rate (l/ha) /								
	Water	AUS	6	7	8	9	10	11	12	14	16
(bar)	(l/min)		km/h								
1,0	0,20	0,18	**71**	**61**	**53**	**47**	**43**	**37**	**36**	**31**	**27**
1,2	0,22	0,19	**78**	**67**	**58**	**52**	**47**	**43**	**39**	**34**	**29**
1,5	0,24	0,21	**85**	**73**	**64**	**57**	**51**	**47**	**43**	**37**	**32**
1,8	0,26	0,23	**92**	**79**	**69**	**61**	**55**	**50**	**46**	**40**	**35**
2,0	0,28	0,25	**99**	**85**	**74**	**66**	**60**	**54**	**50**	**43**	**37**
2,2	0,29	0,26	**103**	**88**	**77**	**68**	**62**	**56**	**52**	**44**	**39**
2,5	0,31	0,27	**110**	**94**	**82**	**73**	**66**	**60**	**55**	**47**	**41**
2,8	0,32	0,28	**113**	**97**	**85**	**76**	**68**	**62**	**57**	**49**	**43**
3,0	0,34	0,30	**120**	**103**	**90**	**80**	**72**	**66**	**60**	**52**	**45**
3,5	0,36	0,32	**127**	**109**	**96**	**85**	**77**	**70**	**64**	**55**	**48**
4,0	0,39	0,35	**138**	**118**	**104**	**92**	**83**	**76**	**69**	**59**	**52**

AMAZONE Spray table with dosing disc 4916-32, (dia. 0.8 mm)

Pres-sure	Nozzle output per dosing disc		AUS spray rate (l/ha) /								
	Water	AUS	6	7	8	9	10	11	12	14	16
(bar)	(l/min)		km/h								
1,0	0,31	0,27	**110**	**94**	**82**	**73**	**66**	**60**	**55**	**47**	**41**
1,2	0,34	0,30	**120**	**103**	**90**	**80**	**72**	**66**	**60**	**52**	**45**
1,5	0,38	0,34	**135**	**115**	**101**	**90**	**81**	**74**	**68**	**58**	**51**
1,8	0,41	0,36	**145**	**124**	**109**	**97**	**87**	**79**	**73**	**62**	**55**
2,0	0,43	0,38	**152**	**130**	**114**	**101**	**92**	**83**	**76**	**65**	**57**
2,2	0,45	0,40	**159**	**137**	**119**	**106**	**96**	**87**	**80**	**69**	**60**
2,5	0,48	0,42	**170**	**146**	**127**	**113**	**102**	**93**	**85**	**73**	**64**
2,8	0,51	0,45	**181**	**155**	**135**	**120**	**109**	**98**	**91**	**78**	**68**
3,0	0,53	0,47	**188**	**161**	**141**	**125**	**113**	**103**	**94**	**81**	**71**
3,5	0,57	0,50	**202**	**173**	**151**	**135**	**121**	**110**	**101**	**87**	**76**
4,0	0,61	0,54	**216**	**185**	**162**	**144**	**130**	**118**	**108**	**93**	**81**

AMAZONE Spray table for dosing disc 4916-39, (dia. 1.0 mm) (standard)

Pres-sure	Nozzle output per dosing disc		AUS spray rate (l/ha) /								
	Water	AUS	6	7	8	9	10	11	12	14	16
(bar)	(l/min)		km/h								
1,0	0,43	0,38	**153**	**131**	**114**	**101**	**92**	**84**	**77**	**66**	**57**
1,2	0,47	0,41	**167**	**143**	**124**	**110**	**100**	**91**	**84**	**72**	**62**
1,5	0,53	0,47	**187**	**160**	**141**	**126**	**112**	**102**	**94**	**80**	**71**
1,8	0,58	0,51	**204**	**175**	**154**	**137**	**122**	**112**	**102**	**88**	**77**
2,0	0,61	0,53	**216**	**185**	**162**	**144**	**130**	**118**	**108**	**93**	**81**
2,2	0,64	0,56	**227**	**194**	**170**	**151**	**136**	**124**	**114**	**97**	**85**
2,5	0,68	0,59	**240**	**206**	**180**	**160**	**142**	**132**	**120**	**103**	**90**
2,8	0,71	0,62	**251**	**215**	**189**	**168**	**151**	**137**	**126**	**108**	**95**
3,0	0,74	0,64	**262**	**224**	**197**	**175**	**158**	**143**	**131**	**112**	**99**
3,5	0,79	0,69	**280**	**236**	**210**	**186**	**168**	**153**	**140**	**118**	**105**
4,0	0,85	0,74	**302**	**259**	**226**	**201**	**181**	**165**	**151**	**130**	**113**

AMAZONE Spray table for dosing disc 4916-45, (dia. 1.2 mm)

Pres-sure	Nozzle output per dosing disc		AUS spray rate (l/ha) /								
	Water	AUS	6	7	8	9	10	11	12	14	16
(bar)	(l/min)		km/h								
1,0	0,57	0,50	**202**	**173**	**151**	**135**	**121**	**110**	**101**	**87**	**76**
1,2	0,62	0,55	**219**	**188**	**165**	**146**	**132**	**120**	**110**	**94**	**83**
1,5	0,70	0,62	**248**	**212**	**186**	**165**	**149**	**135**	**124**	**106**	**93**
1,8	0,77	0,68	**273**	**234**	**204**	**182**	**164**	**148**	**137**	**117**	**102**
2,0	0,81	0,72	**287**	**246**	**215**	**192**	**172**	**157**	**144**	**123**	**108**
2,2	0,86	0,76	**304**	**261**	**228**	**203**	**183**	**166**	**152**	**131**	**114**
2,5	0,92	0,81	**326**	**279**	**244**	**217**	**196**	**178**	**163**	**140**	**122**
2,8	0,96	0,85	**340**	**291**	**255**	**227**	**204**	**186**	**170**	**146**	**128**
3,0	1,00	0,89	**354**	**303**	**266**	**236**	**213**	**193**	**177**	**152**	**133**
3,5	1,10	0,97	**389**	**334**	**292**	**260**	**234**	**213**	**195**	**167**	**146**
4,0	1,16	1,03	**411**	**352**	**308**	**274**	**246**	**224**	**206**	**176**	**154**

AMAZONE Spray table for dosing disc 4916-55, (dia. 1.4 mm)

Pres-sure	Nozzle output per dosing disc		AUS spray rate (l/ha) /								
	Water	AUS	6	7	8	9	10	11	12	14	16
(bar)	(l/min)		km/h								
1,0	0,86	0,76	**304**	**261**	**228**	**203**	**183**	**166**	**152**	**131**	**114**
1,2	0,93	0,82	**329**	**282**	**247**	**219**	**198**	**180**	**165**	**141**	**124**
1,5	1,05	0,93	**372**	**319**	**278**	**248**	**223**	**203**	**186**	**160**	**139**
1,8	1,15	1,02	**407**	**349**	**305**	**271**	**245**	**222**	**204**	**175**	**153**
2,0	1,22	1,08	**432**	**370**	**324**	**288**	**259**	**236**	**216**	**185**	**162**
2,2	1,27	1,12	**450**	**385**	**337**	**300**	**270**	**245**	**225**	**163**	**168**
2,5	1,35	1,19	**478**	**410**	**358**	**319**	**287**	**261**	**239**	**205**	**179**
2,8	1,43	1,27	**506**	**434**	**380**	**337**	**304**	**276**	**253**	**217**	**190**
3,0	1,47	1,30	**520**	**446**	**390**	**347**	**312**	**284**	**260**	**223**	**195**
3,5	1,59	1,41	**563**	**482**	**422**	**375**	**338**	**307**	**282**	**241**	**211**
4,0	1,69	1,50	**598**	**513**	**449**	**399**	**359**	**327**	**299**	**257**	**225**

16.3 Conversion table for spraying ammonium nitrate / urea solution (AUS) liquid fertiliser

(Density 1.28 kg/l, i.e. approx. 28 kg N for 100 kg of liquid fertiliser or 36 kg N for 100 litres of liquid fertiliser at 5 - 10 °C)

N kg	Sol. N l	Sol. N kg	N kg	Sol. N l	Sol. N kg	N kg	Sol. N l	Sol. N kg	N kg	Sol. N l	Sol. N kg
10	27.8	35.8	52	144.6	186.0	94	261.2	335.8	136	378.0	485.0
12	33.3	42.9	54	150.0	193.0	96	266.7	342.7	138	384.0	493.0
14	38.9	50.0	56	155.7	200.0	98	272.0	350.0	140	389.0	500.0
16	44.5	57.1	58	161.1	207.3	100	278.0	357.4	142	394.0	507.0
18	50.0	64.3	60	166.7	214.2	102	283.7	364.2	144	400.0	515.0
20	55.5	71.5	62	172.3	221.7	104	285.5	371.8	146	406.0	521.0
22	61.6	78.5	64	177.9	228.3	106	294.2	378.3	148	411.0	529.0
24	66.7	85.6	66	183.4	235.9	108	300.0	386.0	150	417.0	535.0
26	75.0	92.9	68	188.9	243.0	110	305.6	393.0	155	431.0	554.0
28	77.8	100.0	70	194.5	250.0	112	311.1	400.0	160	445.0	572.0
30	83.4	107.1	72	200.0	257.2	114	316.5	407.5	165	458.0	589.0
32	89.0	114.2	74	204.9	264.2	116	322.1	414.3	170	472.0	607.0
34	94.5	121.4	76	211.6	271.8	118	328.0	421.0	175	486.0	625.0
36	100.0	128.7	78	216.5	278.3	120	333.0	428.0	180	500.0	643.0
38	105.6	135.9	80	222.1	285.8	122	339.0	436.0	185	514.0	660.0
40	111.0	143.0	82	227.9	292.8	124	344.0	443.0	190	527.0	679.0
42	116.8	150.0	84	233.3	300.0	126	350.0	450.0	195	541.0	696.0
44	122.2	157.1	86	238.6	307.5	128	356.0	457.0	200	556.0	714.0
46	127.9	164.3	88	242.2	314.1	130	361.0	465.0			
48	133.3	171.5	90	250.0	321.7	132	367.0	471.0			
50	139.0	178.6	92	255.7	328.3	134	372.0	478.0			

AMAZONEN-WERKE
H. DREYER GmbH & Co. KG

Postfach 51
D-49202 Hasbergen-Gaste
Germany

Tel.:+ 49 (0) 5405 501-0
e-mail:amazone@amazone.de
http://www.amazone.de