Operating Manual

AMAZONE

Software AMABUS
and Multi-function stick
ZG- B

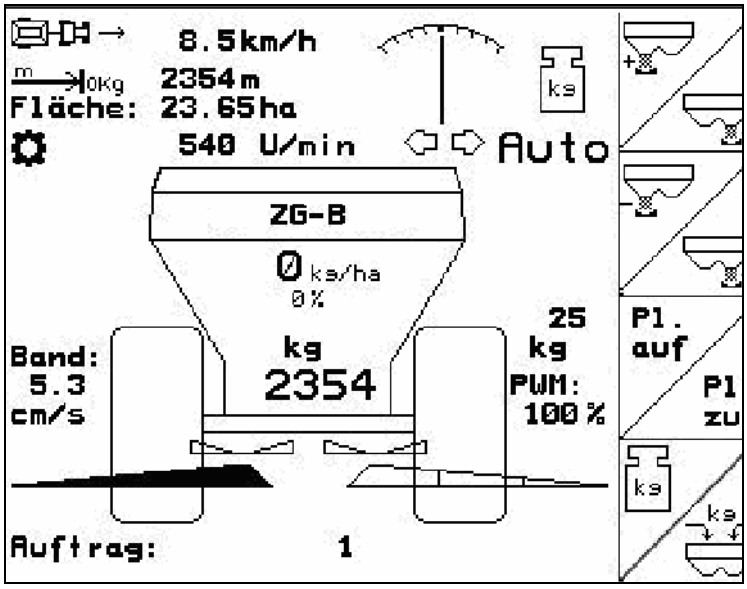

MG4583
BAG0123.0 12.12
Printed in Germany

Please read this operating manual before first commissioning.
Keep it in a safe place for future use.

en

Reading the instruction

Manual and following it should seem to be inconvenient and superfluous as it is not enough to hear from others and to realize that a machine is good, to buy it and to believe that now everything should work by itself. The person in question would not only harm himself but also make the mistake of blaming the machine for possible failures instead of himself. In order to ensure success one should enter the mind of a thing, make himself familiar with every part of the machine and get acquainted with how it's handled. Only in this way could you be satisfied both with the machine and with yourself. This goal is the purpose of this instruction manual.

Leipzig-Plagwitz 1872. Rud. Sack.

Identification data

Enter the machine identification data here. You will find the identification data on the type plate.

Machine identification number: (ten-digit)	
Type:	**AMABUS**
Year of manufacture:	
Basic weight (kg):	
Approved total weight (kg):	
Maximum load (kg):	

Manufacturer's address

AMAZONEN-WERKE

H. DREYER GmbH & Co. KG

Postfach 51

D-49202 Hasbergen

Tel.: + 49 (0)5405 501-0

Fax: + 49 (0)5405 501-234

E-mail: amazone@amazone.de

Spare part orders

AMAZONEN-WERKE

H. DREYER GmbH & Co. KG

Postfach 51

D-49202 Hasbergen

Tel.: + 49 (0)5405 501-290

Fax: + 49 (0)5405 501-106

E-mail: et@amazone.de

Online spare parts catalogue: www.amazone.de

When ordering spare parts, always specify the (ten-digit) machine identification number.

Formalities of the operating manual

Document number:	MG4583
Compilation date:	12.12

© Copyright AMAZONEN-WERKE H. DREYER GmbH & Co. KG, 2008

All rights reserved.

Reprinting, even of sections, only possible with the approval of AMAZONEN-WERKE H. DREYER GmbH & Co. KG.

Foreword

Dear Customer,

You have chosen one of the quality products from the wide product range of AMAZONEN-WERKE, H. DREYER GmbH & Co. KG. We thank you for your confidence in our products.

On receiving the machine, check to see if it was damaged during transport or if parts are missing. Using the delivery note, check that the machine was delivered in full including the ordered special equipment. Damage can only be rectified if problems are signalled immediately!

Before first commissioning, read and understand this operating manual, and particularly the safety information. Only after careful reading will you be able to benefit from the full scope of your newly purchased machine.

Please ensure that all the machine operators have read this operating manual before commissioning the machine.

Should you have problems or queries, please consult this operating manual or give us a call.

Regular maintenance and timely replacement of worn or damaged parts increases the lifespan of your machine.

User evaluation

Dear Reader,

We update our operating manuals regularly. Your suggestions for improvement help us to create ever more user-friendly manuals. Send us your suggestions by fax.

AMAZONEN-WERKE

H. DREYER GmbH & Co. KG

Postfach 51

D-49202 Hasbergen

Tel.: + 49 (0)5405 501-0

Fax: + 49 (0)5405 501-234

E-mail: amazone@amazone.de

1 User Information 7
1.1 Purpose of the document 7
1.2 Locations in the operating manual 7
1.3 Diagrams used 7

2 General safety instructions 8
2.1 Representation of safety symbols 8

3 Product description 9
3.1 Entries on **AMATRON 3** 10
3.2 Software version 10
3.3 Hierarchy of the software 11

4 Commissioning 12
4.1 Main menu 12
4.2 Entering machine data 13
4.2.1 Configuring quantity reduction (machine data) 15
4.2.2 Calibrating distance sensor (machine data) 16
4.2.3 Entering universal joint shaft speed (machine data) 17
4.2.4 Calibrating Trail-Tron drawbar (machine data) 18
4.3 Starting a job 19
4.3.1 External job 20
4.4 Calibrating fertiliser 21
4.4.1 Determining fertiliser calibration factors during standstill for **ZG-B ultra hydro** 22
4.4.2 Determining fertiliser calibration factor automatically with weighing spreader for **ZG-B ultra hydro** 24
4.4.3 Determining fertiliser calibration factor during standstill for **ZG-B drive** 26
4.4.4 Determining the fertiliser calibration factor automatically with the weighing spreader for **ZG-B drive** 28
4.5 Service Setup 30
4.5.1 Taring/calibrating weighing cell 33
4.6 Mobile test rig 34

5 Use on the field 35
5.1 The work menu 36
5.2 Functions in work menu 37
5.2.1 Slide gates 37
5.2.2 **ZG-B** with Trail-Tron 37
5.2.3 Boundary spreading with limiter 41
5.2.4 Changing spread rate on one side (only **ZG-B ultra hydro**) 41
5.2.5 Tarpaulin 42
5.2.6 Calibrate fertiliser 42
5.2.7 Add fertiliser (only **ZG-B ultra hydro**) 42
5.2.8 Switching spreader disc drive on and off (only **ZG-B ultra hydro**) 43
5.2.9 Boom part width sections (only **ZG-B ultra hydro**) 43
5.2.10 Boundary spreading (only **ZG-B ultra hydro**) 44
5.3 **ZG-B drive** 45
5.3.1 Procedure for use 45
5.3.2 Work menu key layout 46
5.4 **ZG-B ultra hydro** 48
5.4.1 Procedure for use 48
5.5 Filling with fertiliser 51
5.6 Emptying the fertiliser hopper 52

6 Multifunction stick 54
6.1 Installation 54
6.2 Function 54
6.3 Key layout: 55
7 Maintenance and cleaning 56
7.1 Cleaning 56
7.2 Basic slider setting 56
8 Malfunction 58
8.1 Alarm 58
8.2 Distance sensor (impulses/100 m failure) 58

1 User Information

The User Information section supplies information on use of the operating manual.

1.1 Purpose of the document

This operating manual

- Describes the operation and maintenance of the machine.
- Provides important information on safe and efficient handling of the machine.
- Is a component part of the machine and should always be kept with the machine or the traction vehicle.
- Keep it in a safe place for future use.

1.2 Locations in the operating manual

All the directions specified in the operating manual are always seen from the direction of travel.

1.3 Diagrams used

Handling instructions and reactions

Activities to be carried out by the user are given as numbered instructions. Always keep to the order of the handling instructions. The reaction to the handling instructions is given by an arrow.

Example:

1. Handling instruction 1

→ Reaction of the machine to handling instruction 1

2. Handling instruction 2

Lists

Lists without an essential order are shown as a list with bullets.

Example:

- Point 1
- Point 2

Number items in diagrams

Numbers in round brackets refer to the item numbers in the diagrams. The first number refers to the diagram and the second number to the item in the figure.

Example: (Fig. 3/6)

- Figure 3
- Item 6

2 General safety instructions

Knowledge of the basic safety information and safety regulations is a basic requirement for safe handling and fault-free machine operation.

The operation manual

- Must always be kept at the place at which the machine is operated.
- Must always be easily accessible for the user and maintenance personnel.

2.1 Representation of safety symbols

Safety instructions are indicated by the triangular safety symbol and the highlighted signal word. The signal word (DANGER, WARNING, CAUTION) describes the gravity of the risk and has the following significance:

DANGER

Indicates an immediate high risk which will result in death or serious physical injury (loss of body parts or long term damage) if not avoided.

If the instructions are not followed, then this will result in immediate death or serious physical injury.

WARNING

Indicates a medium risk, which could result in death or (serious) physical injury if not avoided.

If the instructions are not followed, then this may result in death or serious physical injury.

CAUTION

Indicates a low risk which could incur minor or medium level physical injury or damage to property if not avoided.

IMPORTANT

Indicates an obligation to special behaviour or an activity required for proper machine handling.

Non-compliance with these instructions can cause faults on the machine or in the environment.

NOTE

Indicates handling tips and particularly useful information.

These instructions will help you to use all the functions of your machine to the optimum.

3 Product description

AMAZONE machines are easy to control, operate and monitor when using the **AMBUS** software and the in-cab terminal **AMATRON 3**.

The **AMBUS** software works with the following **AMAZONE** machines:

- **ZG-B drive** with electrohydraulically controlled floor belt.
- **ZG-B ultra hydro** with spreader unit **ZA-M-ultra** and hydraulic spreader disc drive.

The **AMBUS** software controls the application rate according to forward speed.

Depending on the machine and its configuration, a press of a button allows you:

- to change the spread rate into pre-specified steps (e.g. +/- 10%)
- to calibrate the amount of fertiliser while driving (weighing spreader only)
- easy boundary spreading
- convenient wedge-shaped field broadcasting (only **ZG-B ultra hydro**).

Main menu (Fig. 1)

The main menu contains several submenus for making settings before starting work, such as

- entering details,
- determining or entering settings.

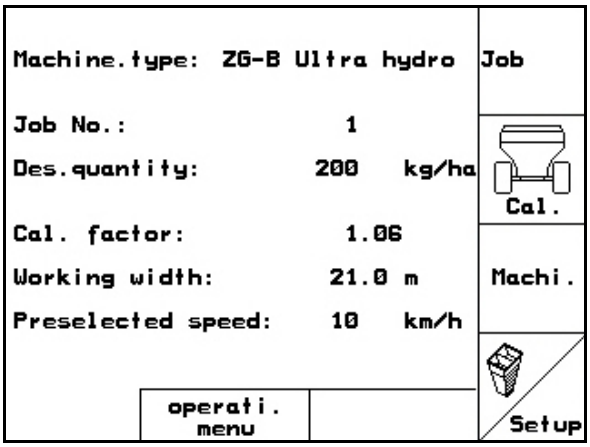

Fig. 1

Work menu (Fig. 2)

- The work menu displays all necessary spreading details as you go.
- It is used to control the machine as you work.

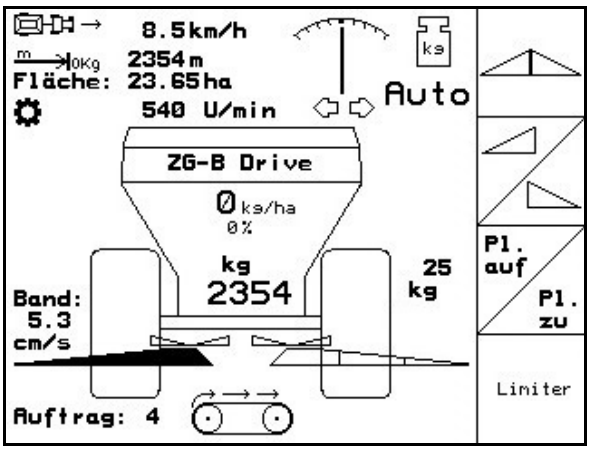

Fig. 2

3.1 Entries on AMATRON 3

For operation of the **AMATRON 3**, the function fields appear **in this operating manual** in order to make clear that the key for the respective function field must be pressed.

Example:

- Function field A:

Description in the operating manual:

A Perform function **A**.

Action:

The operator uses the key (Fig. 3/1) assigned to the function field to perform function **A**.

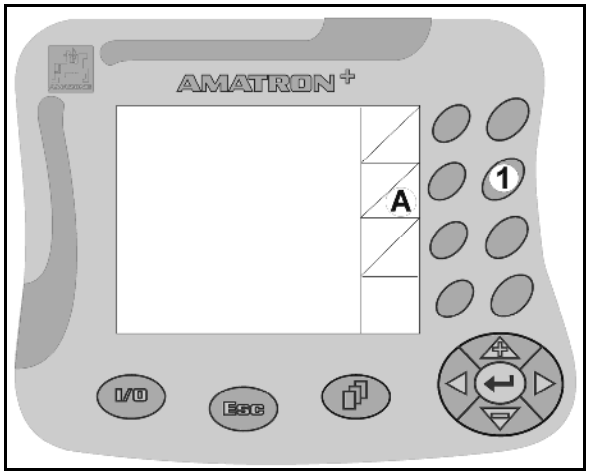

Fig. 3

3.2 Software version

This operating manual is valid from software version:

Machine: MHX version: 2.29.01

3.3 Hierarchy of the software

Work menu ← Esc → **Main menu**

Job menu

- Enter names
- Enter note
- Enter spread quantity
- Start/continue job
- Delete job
- Delete daily data

Fertiliser calibration menu (at standstill)

- Enter working width
- Enter spread rate
- Enter speed
- Enter calibration factors
- Perform fertiliser calibration
- Open/close slider
- Switch floor belt on/off

Machine data menu

- Fertiliser level
- Top up fertiliser
- Fertiliser alarm limit
- Empty hopper
- Configure quantity change
- Calibrate impulses per 100 m
- Change specified universal joint shaft speed
- Headland row counter
- Tare spreader
- Calibrate Trail-Tron
- Nominal disc speed
- Disc speed
  - Boundary spreading
  - Edge spreading
  - Trench spreading

Mobile test rig

Service set-up menu (for service personnel only)

- Diagnosis input
- Diagnosis output
- Simulated speed
- Select basic data
  - Machine type
  - Weighing cell
  - Calibrate weighing cell
  - Limiter present
  - Basic setting for sliders
  - Hydraulically operated tarpaulin
  - Slide gate
  - Control factor
  - RESET
  - Belt speed display
  - Trail-Tron
  - Trail-Tron deviation factor
  - Trail-Tron control factor

4 Commissioning

4.1 Main menu

-

Job menu (see page 19)
  - o Data entry for new job.
  - o Start job before beginning spreading.
  - o The data for up to 20 jobs are stored
-

Fertiliser calibration menu (see page 21):
Before each use, determine the calibration factor for the fertiliser to be spread.

→ In the case of the **ZG-B** with weighing technology, the calibration factor can be determined during a calibration run (see page 24).

-

Machine data menu (see page 13).
Input of machine-specific or individual data.
- 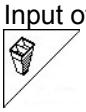
Mobile test rig menu (see page 34)
For calibrating the vane setting when checking lateral distribution with the mobile test rig. (refer to the operating manual for the mobile test rig).
-

Service setup menu (see page 30)
Input of basic settings

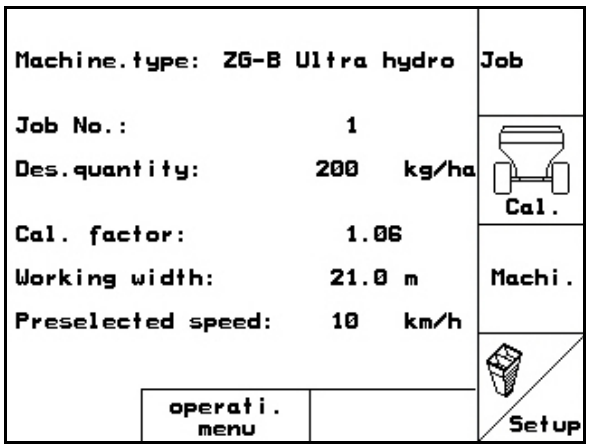

Fig. 4

4.2 Entering machine data

Select **Machine data** in the main menu.

Page 1 (Fig. 5):

- Enter fertiliser level in kg.
- Add fertiliser (see page 51).
- Enter alarm limit for residual quantity in kg.

Empty hopper, see page 52.

- **ZG-B Drive**: (Fig. 5)

  Switch floor belt on/off

- **ZG-B Ultra Hydro**: (Fig. 6)

  Call up Empty hopper submenu.

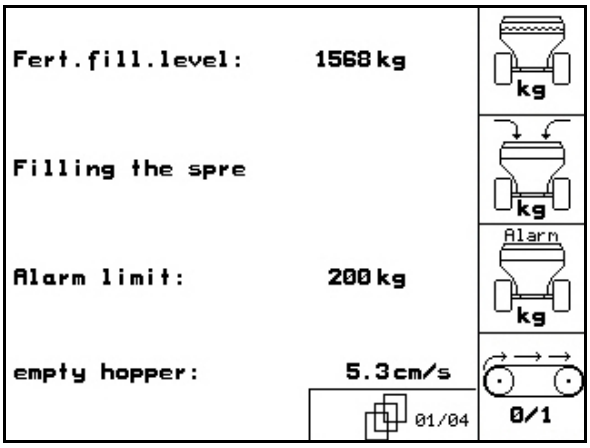

Fig. 5

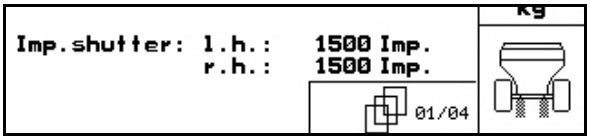

Fig. 6

Page two (Fig. 7)

- Configuring quantity change (see page 15).
- Determine impulses per 100 m (see page 16).
- Enter specified universal joint shaft speed (see page 17).

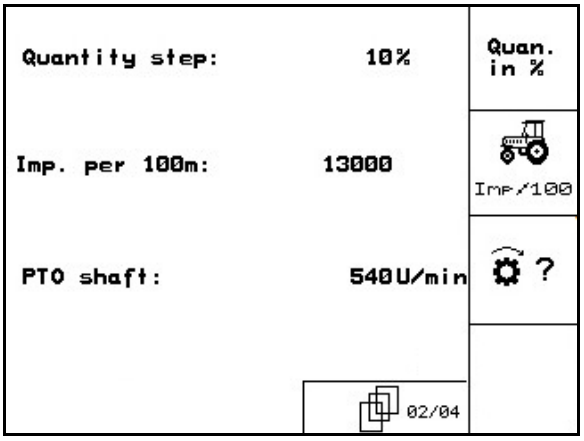

Fig. 7

Page three (Fig. 8)

- Row counter on/off:

  The stored headland distance is displayed to locate the tramlines. The counter starts displaying the tramlines when the slide gates are being closed.

- Spread rice on/off.
  Not permissible for ZG-B!
- Spread slug pellets on/off.
  Not permissible for ZG-B!
- Tare spreader, e.g. after fitting special accessories (see page 33).
  - o Empty the spreader completely, wait for the symbol to go out,
  - o then confirm .

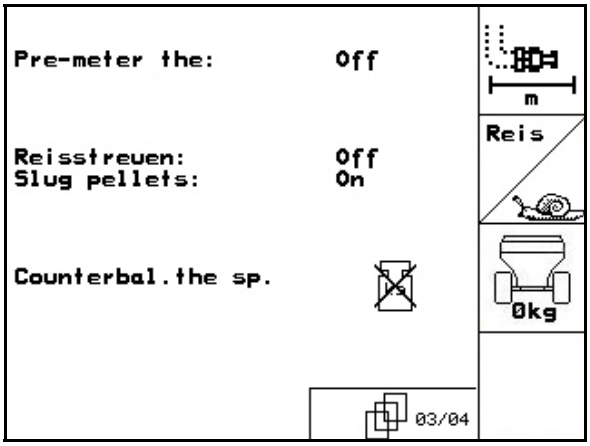

Fig. 8

Page four (Fig. 9)

Only for **ZG-B ultra hydro:**

→ Refer to the setting chart for spreader disc speeds.

- Enter the required spreader disc speed in rpm Standard 720 rpm)
- Spreader disc speed in rpm for boundary spreading.
- Spreader disc speed in rpm for trench spreading.
- Spreader disc speed in rpm for side spreading.

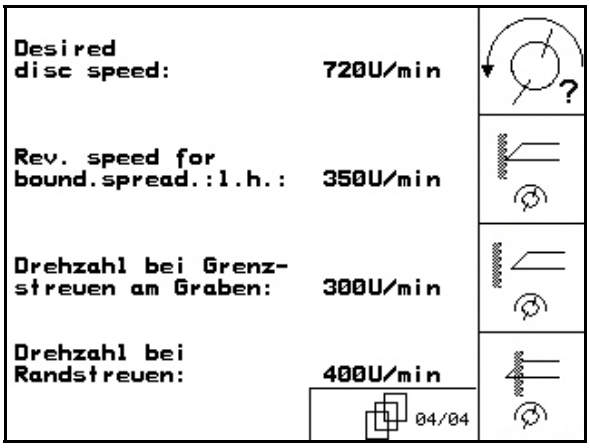

Fig. 9

Page four (Fig. 10)

Only for **ZG-B drive :**

- Calibrate Trail-Tron drawbar, see page 18.

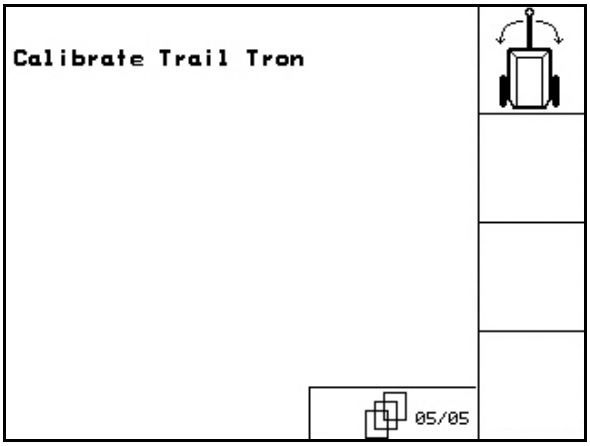

Fig. 10

4.2.1 Configuring quantity reduction (machine data)

- Enter percentage application rate increase (value for percent change while working).
- Only for **ZG-B ultra hydro:** spread rate reduction during boundary spreading
- Only for **ZG-B ultra hydro:** spread rate reduction during trench spreading
- Only for **ZG-B ultra hydro:** spread rate reduction during side spreading

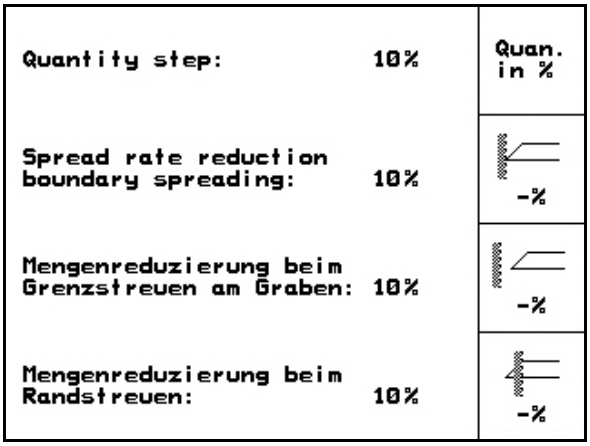

Fig. 11

4.2.2 Calibrating distance sensor (machine data)

The **AMATRON 3** needs the impulses/100 m value to determine the actual speed.

For tractors with ISO bus wiring, enter the value **0** manually for the impulses/100m.

This value must not be less than 250, otherwise the **AMATRON 3** will not function properly.

There are two possibilities for entering impulses/100 m:

- Man. Input The value is known and is entered in the **AMATRON 3** manually.

  0 → for tractors with ISO bus wiring.
- The value is **not** known and is determined by travelling a calibration distance of 100 m.

1. On the field, measure out a calibration distance of exactly 100 m. Mark the start and end point of the calibration distance (Fig. 13).
2. Start Start the calibration.
3. Travel the calibration distance exactly from start to end point (upon starting, the counter goes to 0). On the display the continuously determined impulses are indicated.
4. Stop after 100 m. On the display the number of determined impulses are now indicated.
5. apply impulses/100 m value. The value is assigned to the tractor selected in the memory.
6. Esc Reject impulses/100m value.

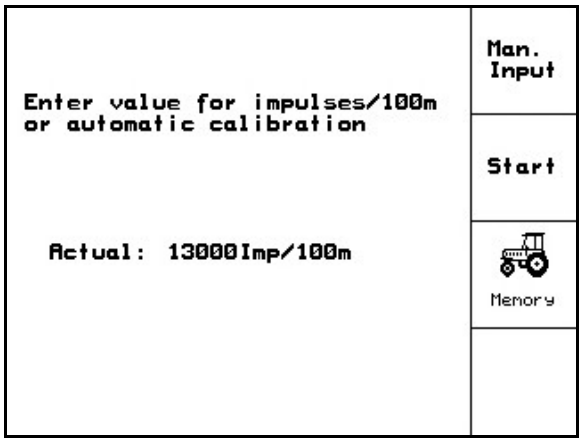

Fig. 12

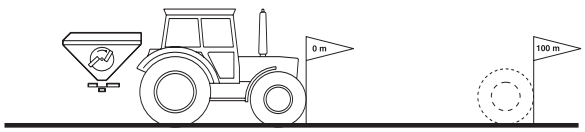

Fig. 13

If an all-wheel drive is used on the field, it must also be switched on during distance sensor calibration.

- [Memory] The impulses/100 m value can be stored for 3 tractors:

1. [▲], [▼] Select tractor →
2. [Tractor Change] Enter/change name
3. [New imp.] Enter impulses/100 m for selected tractor

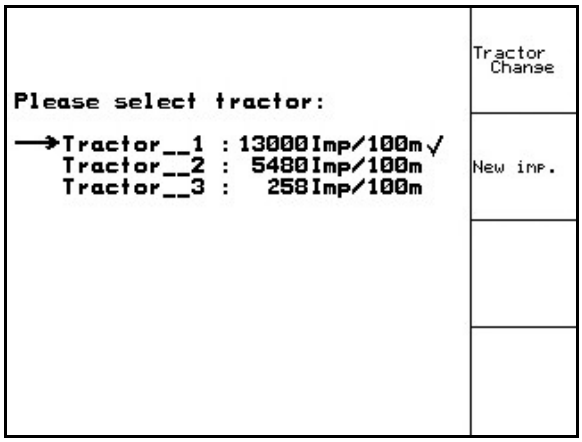

Fig. 14

> If a tractor has already been stored here, its impulses/100 m and universal joint shaft speed values will be used.

4.2.3 Entering universal joint shaft speed (machine data [ ])

> Only for tractors with universal joint shaft speed recording.

- [U/min] Enter required universal joint shaft speed, e.g.:

540 rpm 720 rpm	Standard speeds (see setting chart)
0 rpm:	o no universal joint shaft sensor fitted. o universal joint shaft monitoring not desired.

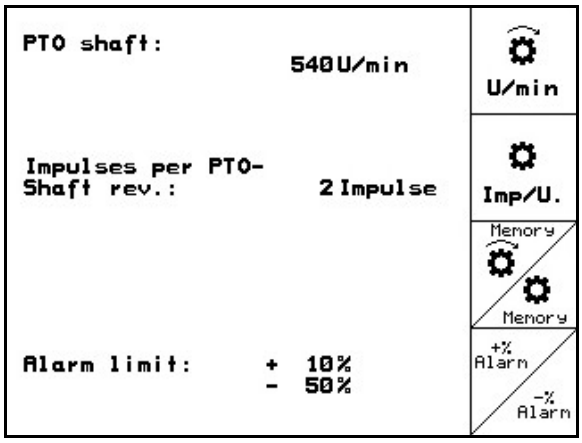

Fig. 15

- [I./U.] Enter impulses per universal joint shaft speed (refer to tractor manufacturer or dealer).
- [Speicher] Select memory for 3 tractors with associated universal joint shaft speed in rpm.

1. [▲], [▼] Select tractor →
2. [Tractor Change] Enter/change name
3. [New rev.'s] Enter universal joint shaft speed.

- Memory for 3 tractors with associated value for impulses/revolution

1. , Select tractor →
2. Tractor Change Enter/change name
3. New imp. Enter impulses/revolution for universal joint shaft.
4. +% Alarm Enter upper alarm limit in %. (Standard value = 10 %).
5. -% Alarm Enter lower alarm limit in %. (Standard value = 10 %).

4.2.4 Calibrating Trail-Tron drawbar (machine data)

1. Drive tractor with **ZG-B** straight ahead for a short distance and align with , until tractor and **ZG-B** are in a single track.
2. Determine the central position.
3. Turn tractor steering wheel right as far as possible and press to retract Trail-Tron cylinder.
4. Determine max. right position.
5. Turn tractor steering wheel left as far as possible and press to extend Trail-Tron cylinder.
6. Determine max. left position.

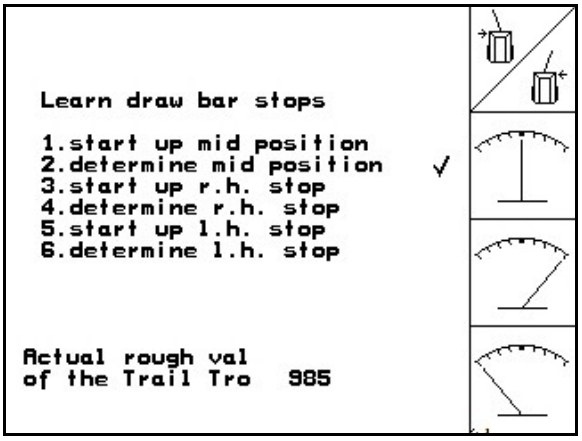

Fig. 16

4.3 Starting a job

Select **Job** in main menu.

When the Job menu is opened, the most recently started (most recently processed) job appears.

Information on max. 20 jobs can be stored (job numbers 1 to 20).

To create a new job, select a job number (Fig. 17/1).

-

Delete the data for the selected job
-

Enter name
-

Enter note
-

Enter spread rate
-

Start the job so that data can be stored with this job.
-

Delete daily data
  - Worked area (ha/day)
  - Fertiliser quantity dispensed (quantity/day)
  - Work time (hours/day).

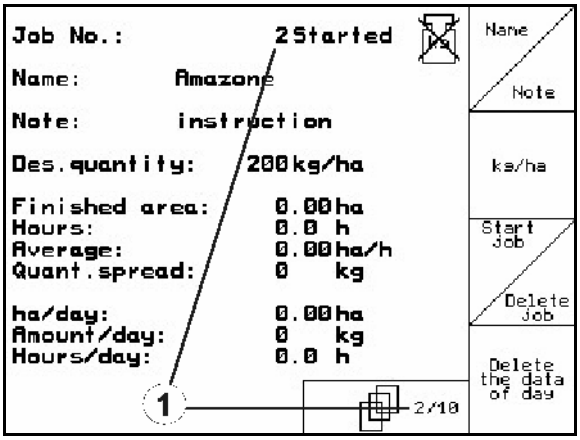

Fig. 17

Already stored jobs can be called up with and restarted with

.

With the shift key pressed (Fig. 18):

- next job Scroll forward through job.
- prev. job Scroll backward through job.

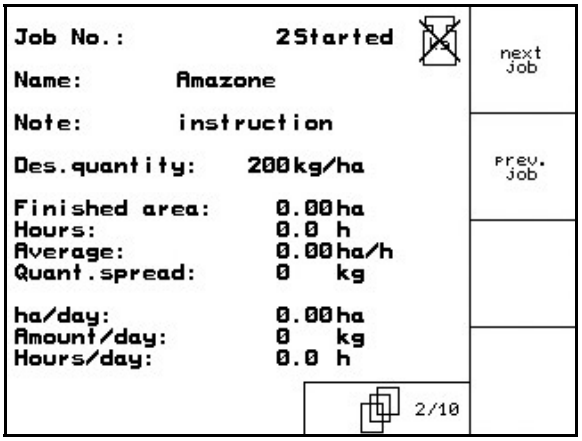

Fig. 18

4.3.1 External job

Using a PDA, an external job can be transferred to the **AMATRON 3** and then started.

This job is always given the job number 21.

The data is transferred via the serial interface.

- finish external job End the external job.

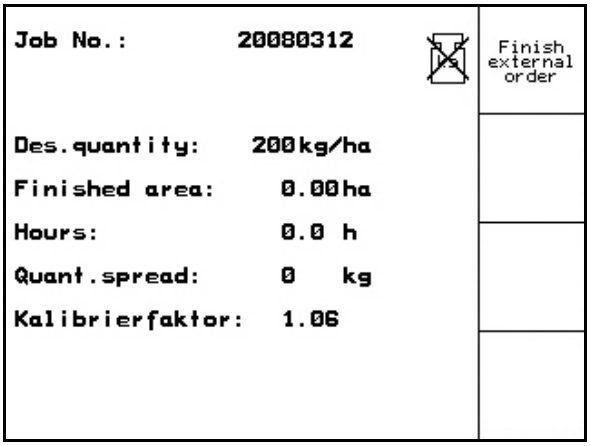

Fig. 19

4.4 Calibrating fertiliser

Select **calibrate fertiliser** in main menu.

The fertiliser calibration factor determines the regulating behaviour of the **AMATRON 3** and is dependent on

- the flow characteristics of the fertiliser to be spread
- the entered spread rate
- the entered working width

The fertiliser flow characteristics depend on:

- storage, storage time and climatic factors
- working conditions

The calibration value is determined differently for each spreader.

The table below indicates the pages where the calibration method is described for each spreader.

ZG- B	**ultra hydro**	**ultra hydro**	**drive**	**drive**
		with weighing equipment		with weighing equipment
Calibrate at standstill	Page 22	Page 22	Page 26	Page 26
Automatic during calibration travel		Page 24		Page 28

- The fertiliser flow characteristics may change even after a brief fertiliser storage period.
  Therefore, before each use, determine again the fertiliser calibration factor of the fertiliser to be spread.
- Always determine the fertiliser calibration factor again if deviations occur between the theoretical and actual spread rate.

ZG-B ultra hydro:

- The spread rate entered in the **AMATRON 3** must not exceed a maximum value (dependent on working width, proposed speed and entered calibration factor).

→ The maximum spread rate/ha has been reached when the dosing sliders are fully open.

- Realistic calibration factors for fertiliser (0.7 to 1.4):
  - 0.7 for urea
  - 1.0 for calcium ammonium nitrate (CAN)
  - 1.4 for fine, heavy PK fertilisers

4.4.1 Determining fertiliser calibration factors during standstill for **ZG-B ultra hydro**

Selecting the fertiliser calibration menu:

1. Secure the tractor and machine against unintentional starting and unintentional rolling away.
2. Add a sufficient quantity of fertiliser to the hopper.
3. Remove the **left** spreader disc.
4. Place a collection bucket under the outlet opening (refer to operating manual **ZG-B**!).
5. Check/enter the working width.
6. Check/enter the spreading quantity.
7. Check/enter the intended speed.
8. Enter calibration factor for determining exact factor, e.g. 1.00.

   The calibration can be

   - The quantity factor can be taken from the setting chart.
   - values based on experience.
9. Switch on the floor belt (appears in the display) and fill the fertiliser sluice. The floor belt stops automatically when the fertiliser sluice is full.
   Do not switch on the tractor universal shaft joint!
10. Open the left hydraulic slider.
11. As soon as the collection bucket is full, close the hydraulic slider.
12. Weigh the collected fertiliser (allow for the weight of the collection bucket).

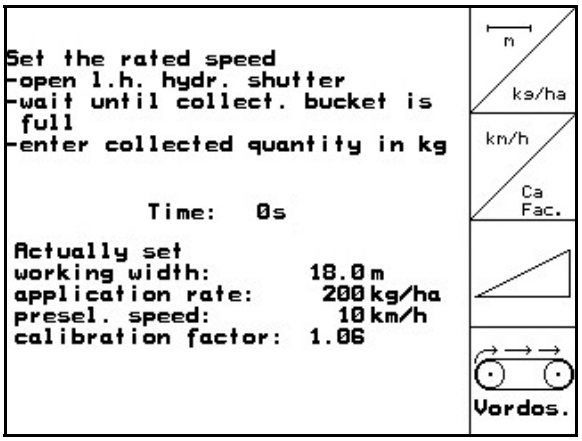

Fig. 20

The scales must weigh accurately. Inaccuracies may cause deviations in the actual dispensed quantity.

13. Enter amount of weighed fertiliser in kg.

→ The new calibration factor will be displayed (Fig. 21).

14. Confirm the calibration factors, or reject with .

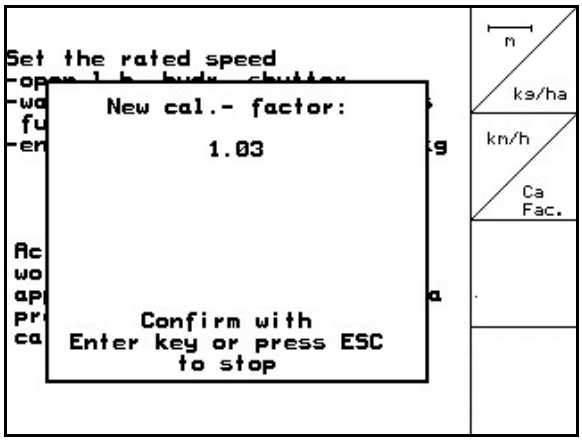

Fig. 21

4.4.2 Determining fertiliser calibration factor automatically with weighing spreader for **ZG-B ultra hydro**

- Fertiliser calibration using weighing technology is carried out during spreading operations where at least **1,000 kg** of fertiliser is to be applied.
- After the first fertiliser calibration, further calibration should be carried out with greater spreading quantities (e.g. 2,500 kg) in order to further optimise the calibration factor.

Selecting the fertiliser calibration menu:

1. Check/enter the working width.
2. Check/enter the spreading quantity.
3. Check/enter the intended speed.
4. Enter calibration factor for determining exact factor, e.g. 1.00.
5. If necessary, fill the prechamber (Fig. 23) with fertiliser.

→ Filling stops automatically when the prechamber is full.

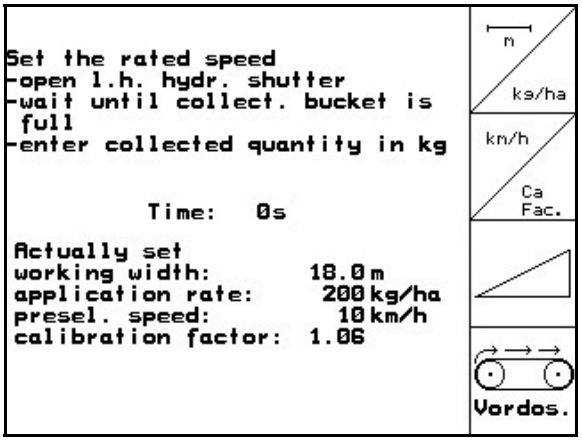

Fig. 22

Fig. 23

- In order to produce the required spread rate from the start, the following should be performed before use:
  - Perform calibration while stationary.
  - take the calibration factor (quantity factor) from the setting chart.
  - Enter an empirical value for the calibration factor.

- The tractor and spreader must be standing level at the start and end of the calibration process.
- The scales must be in their neutral position for the determination of the calibration factor to be started and ended.

→ If the symbol appears in the display, the spreader is not in its neutral position.

Start calibration:

1. Esc Select the work menu.
2. Start calibration.
3. Open the slide gates and move off.
4. Start spreading as usual and spread at least **1,000 kg** of fertiliser.

→ The quantity of fertiliser dispensed is shown in the work menu (Fig. 24/1).

5. Once at least **1,000 kg** of fertiliser has been spread, close the slide gates and come to a stop.
6. End calibration.

→ The new calibration factor will be displayed (Fig. 25).

7. Confirm the calibration factors, or reject with Esc.

→ **The optimised slider position is now used.**

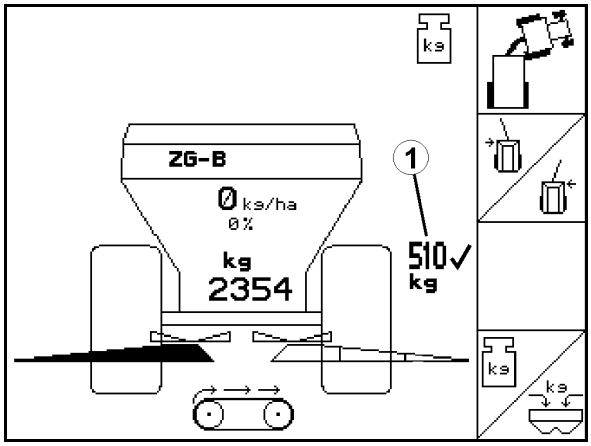

Fig. 24

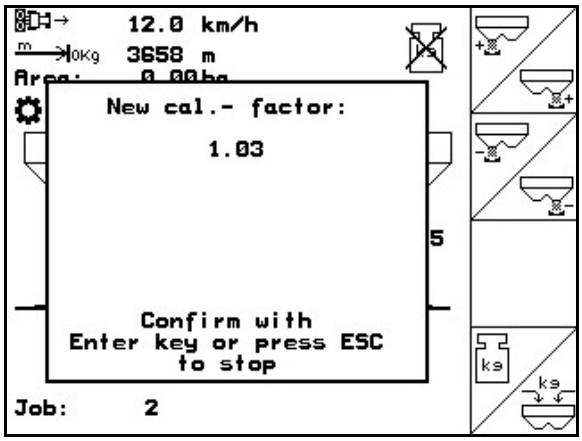

Fig. 25

- In order to carry out calibration successfully, a fertiliser quantity of at least 500 kg must be applied.

  The ✓ indicator appears as of 500 kg.
- If the calibration process is finished before 500 kg fertiliser has been applied, the current calibration factor is taken.

4.4.3 Determining fertiliser calibration factor during standstill for **ZG-B drive**

Selecting the fertiliser calibration menu

1. Secure the tractor and machine against unintentional starting and unintentional rolling away.
2. Add a sufficient quantity of fertiliser to the hopper.
3. Remove both spreader discs.
4. Place a large collection bucket under each fertiliser chute (refer to operating manual for **ZG-B**!).
5. Check/enter the working width.
6. Check/enter the spreading quantity.
7. Check/enter the intended speed.
8. Enter the fertiliser bulk density (see setting chart).

→ Setting for new main slider position is displayed (Fig. 27).

9. Set main slider to recommended position (see operating manual for **ZG-B**)
10. Confirm the new main slider position.
11. Run pre-dosing until the fertiliser has reached the end of the floor belt. The double sliders open automatically.
12. End pre-dosing.

WARNING

There is a risk of injury from the double sliders closing automatically at the end of pre-dosing.

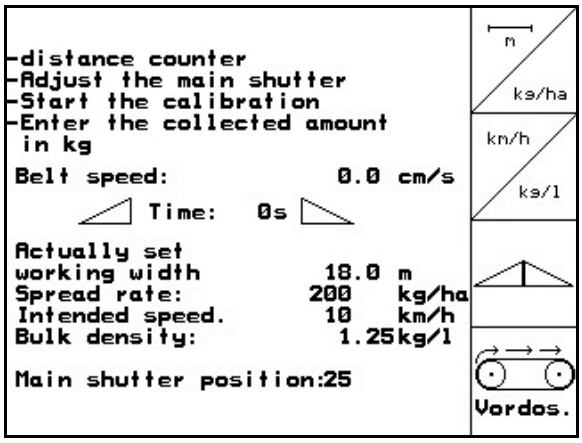

Fig. 26

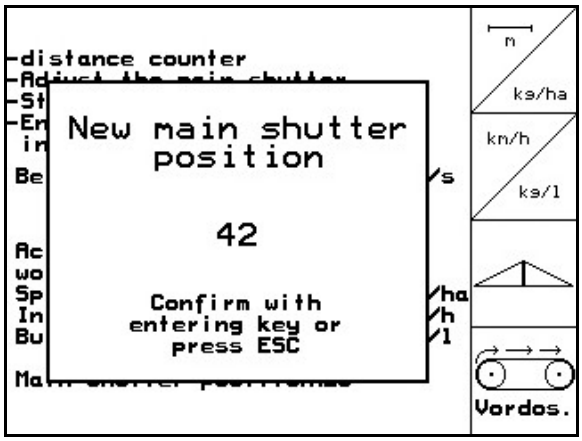

Fig. 27

Start calibration:

13. The double sliders open automatically.

→ During calibration, the **AMATRON 3** indicates the calibration time in seconds.

14. The double sliders close when the collection buckets are full.

15. Weigh the collected fertiliser (allow for the weight of the collection bucket).

> The scales must weigh accurately. Inaccuracies may cause deviations in the actual dispensed quantity.

16. Enter amount of weighed fertiliser in kg.

End of calibration!

→ The optimised belt speed is now used.

> If the difference between the theoretical and calculated calibration factor is too great, a new main slider position will be specified. The calibration process must be repeated with this setting.

4.4.4 Determining the fertiliser calibration factor automatically with the weighing spreader for **ZG-B drive**

- Fertiliser calibration takes place during spreading in which at least **1,000 kg** fertiliser is to be applied.
- After the first fertiliser calibration, further calibration should be carried out with greater spreading quantities (e.g. 2,500 kg) in order to further optimise the calibration factor.

Selecting the fertiliser calibration menu:

1. Check/enter the working width.
2. Check/enter the spreading quantity.
3. Check/enter the intended speed.
4. Enter the bulk density of the fertiliser

→ Take the bulk density from the setting chart.

→ Setting for new main slider position is displayed (Fig. 28).

5. Set main slider to recommended position (see operating manual for **ZG-B**)
6. Confirm the new main slider position.
7. Run pre-dosing until the fertiliser has reached the end of the floor belt. The double sliders open automatically.

CAUTION

There is a risk of injury from the double sliders closing automatically at the end of pre-dosing.

8. End pre-dosing.

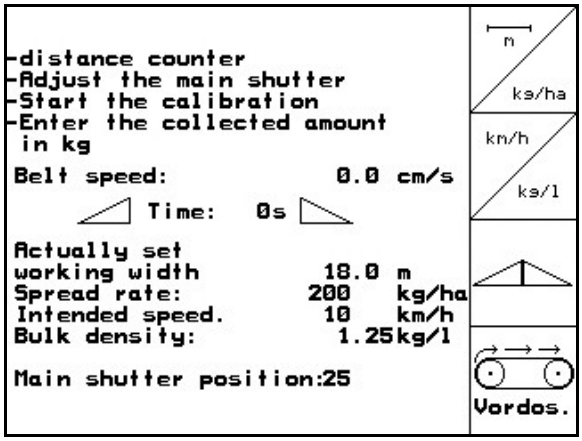

Fig. 28

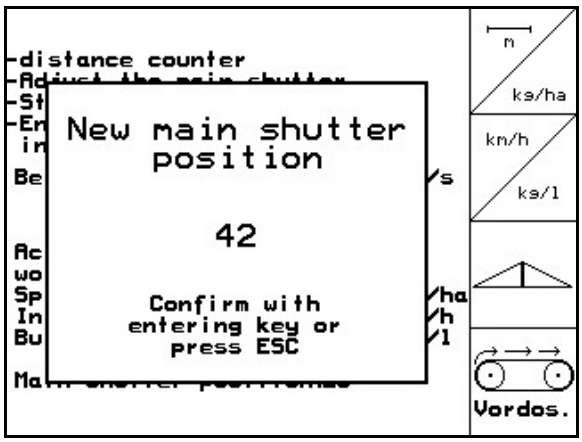

Fig. 29

- The tractor and spreader must be standing level at the start and end of the calibration process.
- The scales must be in their neutral position for the determination of the calibration factor to be started and ended.

→ If the symbol appears in the display, the spreader is not in its neutral position.

Start calibration:

1. Select the work menu.
2. Start automatic calibration.
3. Open the double sliders and move off.
4. Start spreading as usual and spread at least **1,000 kg** of fertiliser.

The quantity of fertiliser spread is shown in the work menu (Fig. 30/1).

5. Spread at least **1,000 kg** of fertiliser.
6. Close the two double sliders and come to a stop.
7. End automatic calibration.

→ **The optimum belt speed will now be used for spreading (Fig. 30/1).**

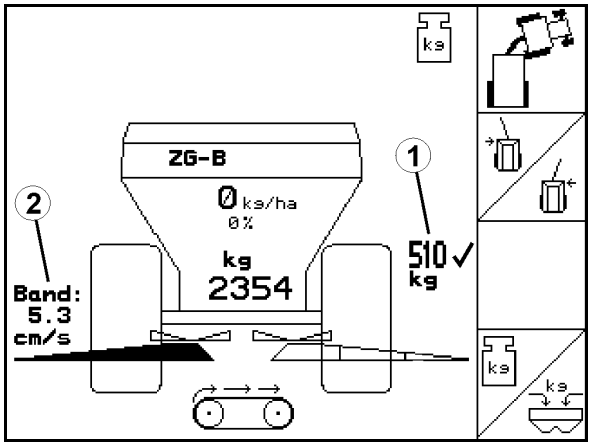

Fig. 30

If the difference between the theoretical and calculated belt speed is too great, a new main slider position will be provided. The calibration process must be repeated with this setting.

- In order to carry out calibration successfully, a fertiliser quantity of at least 500 kg must be applied.

  The ✓ indicator appears as of 500 kg.
- If the calibration process is finished before 500 kg fertiliser has been applied, the current calibration factor is taken.

4.5 Service Setup

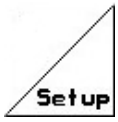

In the main menu, select **Setup** and confirm with

.

Page 1 **of the setup menu (Fig. 31):**

- Diagnosis computer input (only for customer service).
- Diagnosis computer output (only for customer service).
-

Enter simulated speed (allows continued spreading despite faulty distance sensor, see page 58).
-

Terminal setup (see page 34).
- Enter basic data (see page 31).

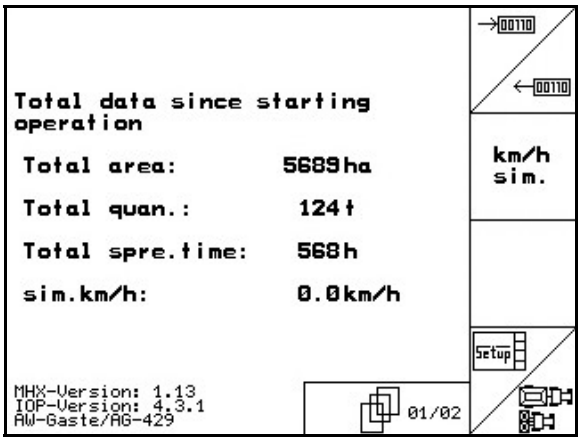

Fig. 31

Page 2 **of the setup menu (Fig. 32):**

-

Reset the machine computer to factory settings.

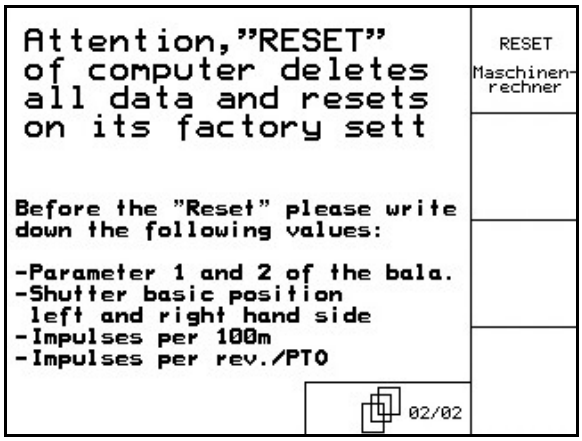

Fig. 32

> All entered and generated data (jobs, machine data, calibration values, setup data) will be lost.

Note the following details beforehand:

- Parameter 1 and 2 for the scales
- Impulses for basic left and right slide setting
- Impulses per 100 m
- Impulses per revolution of the universal joint shaft.

Page 1 Basic data (Fig. 33):

- Selecting machine type.
- Weighing cell present, on / off
- Calibrate weighing cell (page 33).
- **Limiter** present
  - Left
  - Right
  - Off

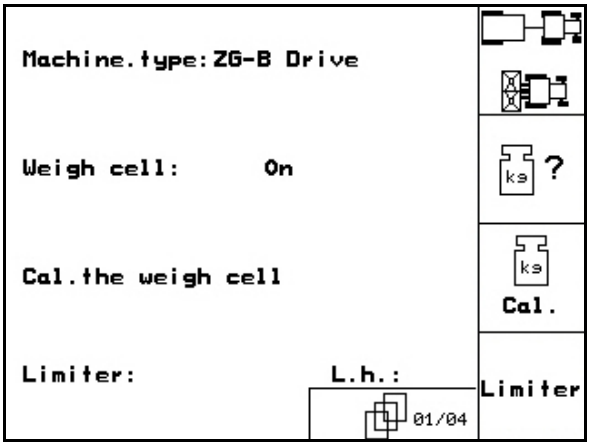

Fig. 33

Page 2 Basic data (Fig. 34):

- **ZG-B ultra hydro**: Basic setting of left slider (page 56).
- **ZG-B ultra hydro**: Basic setting of right slider (page 56).
- tarpaulin fitted: on / off
- Hydraulic slide gate:
  - with spring (double acting)
  - no spring (single acting)
- Control factor (for customer service)

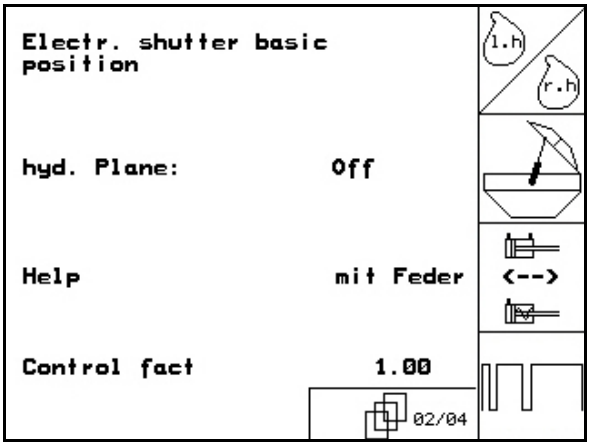

Fig. 34

Page 3 Basic data (Fig. 35):

- Display belt speed in work menu on/off.
- Trail-Tron drawbar fitted on/off.
- Enter Trail-Tron deviation factor.

> The deviation factor indicates the sensitivity from which steering lock the steering starts to work.
>
> **0** → sensitive
>
> **15** → insensitive
>
> Preferred values: **8 to 10**

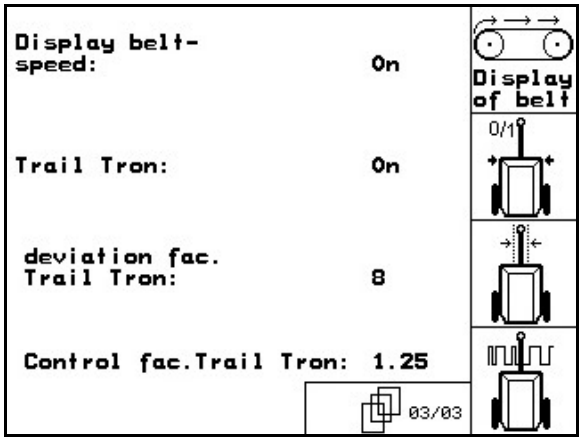

Fig. 35

- Control factor for Trail-Tron drawbar.

→ Standard value:1.25

o Machine oversteered (Fig. 36/1):

→ Select lower control factor

o Machine understeered (Fig. 36/2:

→ Select higher control factor

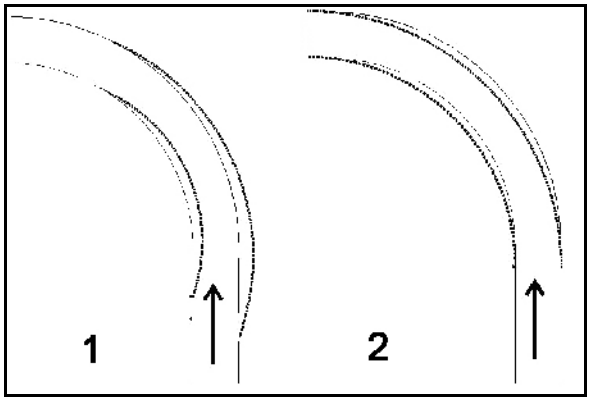

Fig. 36

4.5.1 Taring/calibrating weighing cell

The weighing cell is tared and calibrated at the factory. However, if there are differences between the actual and the spread quantity or the hopper contents, the weighing cell needs to be recalibrated.

See Service Set-up Setup, Basic data menu, page one .

> The weighing cell should be tared if special equipment is fitted

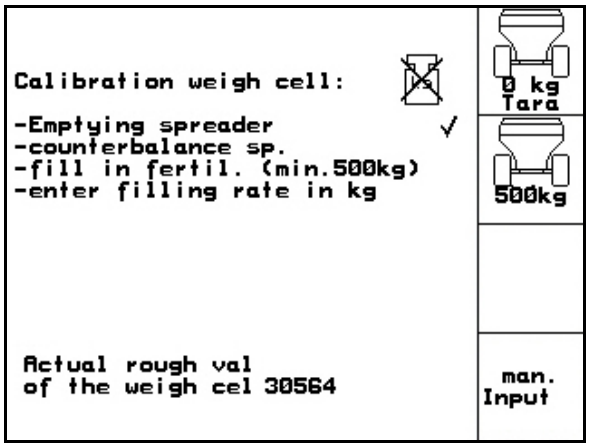

Fig. 37

1. Completely empty the fertiliser spreader (see page 52).
2. Park the tractor with spreader on a horizontal surface and wait until goes out.

> **CAUTION**
>
> **If the symbol appears in the display, the machine is not in its neutral position.**

3. Press .

→ **The spreader is tared.**

4. Load a precisely weighed, minimum 500 kg of fertiliser and wait until the symbol goes out.
5. Press .
6. Enter the weighed fertiliser quantity in kg on the **AMATRON 3**.

→ **The spreader is calibrated**.

> Check by comparing the display in the work menu with the quantity of fertiliser added.

4.6 Mobile test rig

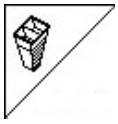

Select **mobile test rig** in the main menu.

Start mobile fertiliser test rig as explained in the mobile test rig operating manual and estimate the lateral distribution.

1. Enter the number of scale lines for fertiliser level **I**.
2. Enter the number of scale lines for fertiliser level **II**.
3. Enter the number of scale lines for fertiliser level **III**.
4. Enter the number of scale lines for fertiliser level **IV**.
5. Correct the selected spreading vane positions and the calculated spreading vane adjustment positions.

Allocate the collected quantity of fertiliser in the 4 set positions (Fig. 39, I, II, III, IV) to function fields I to IV on the **AMATRON 3**.

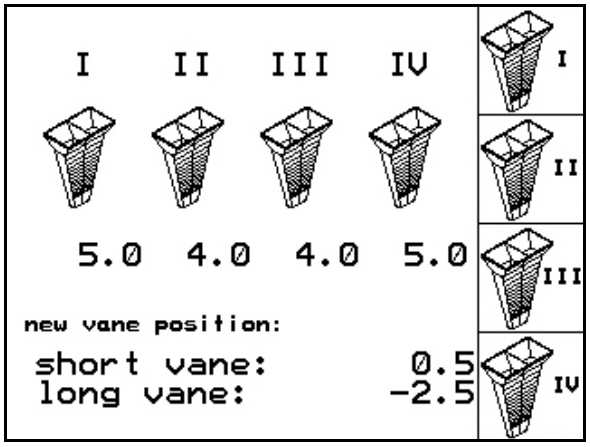

Fig. 38

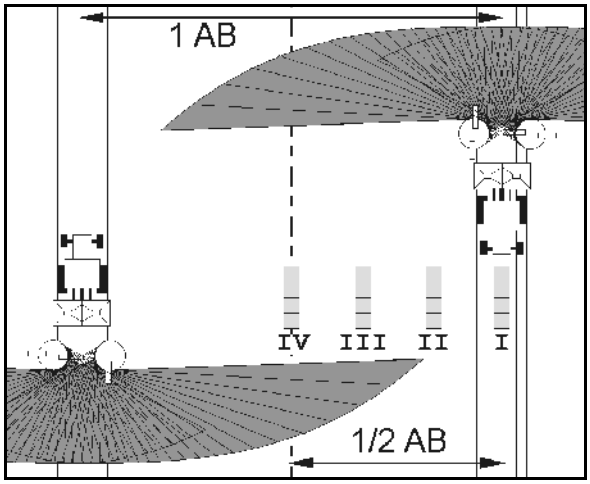

Fig. 39

5 Use on the field

CAUTION

During travel to the field and on public roads, the AMATRON 3 should always be switched off!

→ **Incorrect use leads to the risk of accidents!**

Spreader with weighing cell

- Carry out an automatic fertiliser calibration when you start spreading.
- Before initial use and after fitting special accessories, tare the spreader (see page 33).

Before the spreader can be used, the following information must be entered:

- Enter machine data (see page 13).
- Load and start job (see page 19).
- Calibrate fertiliser with unit at rest or enter calibration value manually (see page 21).

The quantity spread can be changed during spreading by pressing the key.

	Each press of the key increases the spread amount by the rate increase (page 13) (e.g. +10%).
	Set spread amount to 100% on both sides.
	Each press of the key reduces the spread amount by the rate increase (see page 15) (e.g. -10%).

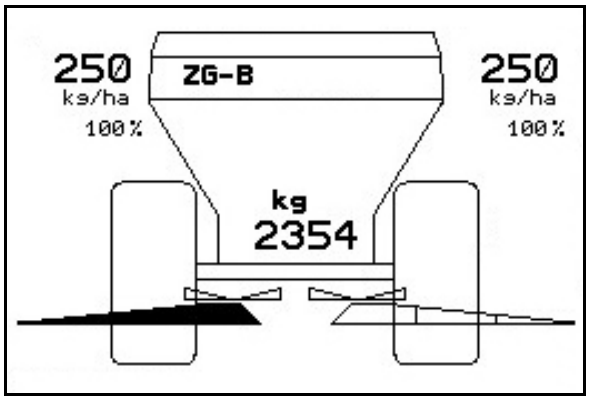

Fig. 40

The changed amount is indicated in the work menu in kg/ha and percent (Fig. 40)!

5.1 The work menu

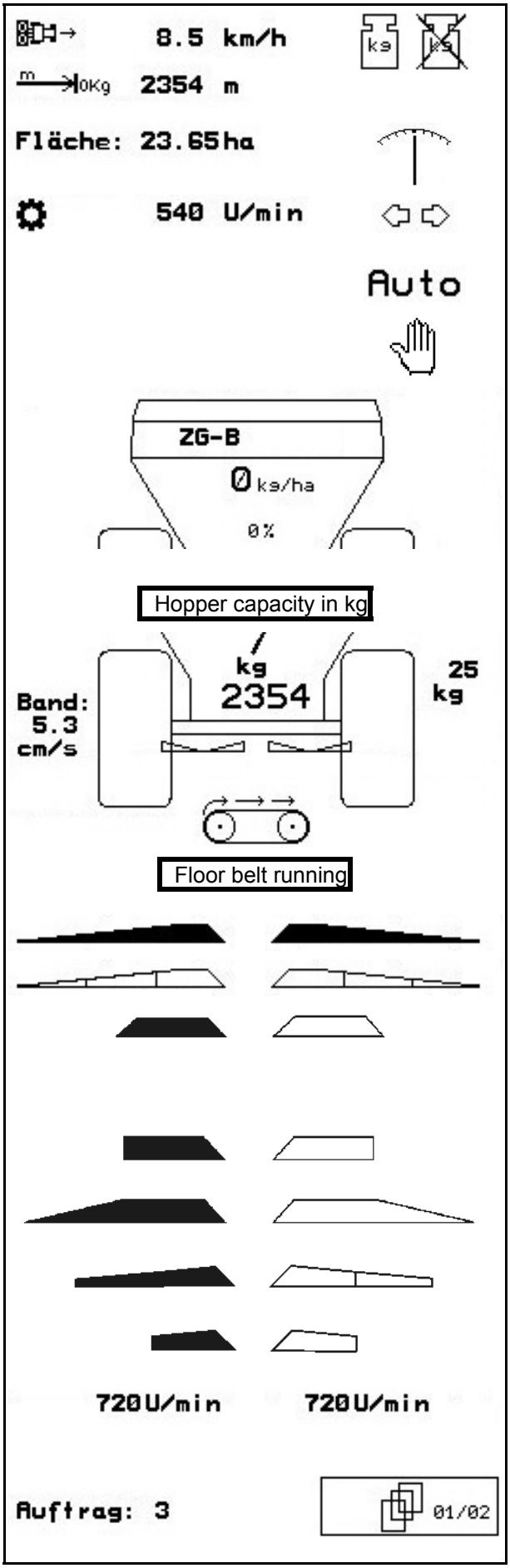

Speed

Remaining distance until hopper empty

Spread area (in job)

Universal joint shaft speed

Only with weighing technology: Scales in neutral position, scales **not** in neutral position

Drawbar position

Direction in which the Trail-Tron cylinder has pre-steered.

Trail-Tron in automatic mode

Trail-Tron in manual mode

Spread amount left in kg/ha

Spread amount left in %

Spread amount right in kg/ha

Spread amount right in %

Belt speed

Spread quantity during automatic calibration (weighing spreader).

Hydraulic slider open

Hydraulic slider closed

Boundary spreading

Preselect boundary spreading

Only **ZG-B ultra hydro**:

Trench spreading

Preselect trench spreading

Edge spreading

Preselect side spreading

One boom part width section off

Preselect one boom part width section off

Two boom part width sections off

Preselect two boom part width sections off

Spreader disc speed, left / right

Current job

Only **ZG-B ultra hydro**:

Open page in work menu.

5.2 Functions in work menu

5.2.1 Slide gates

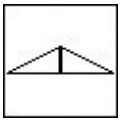

Both slide gates open/shut

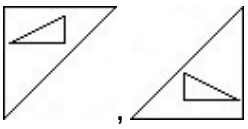

Slide gate left/right, open/shut

Open slide gates before use,

- and drive off
- once the spreader discs have reached the correct speed

Fig. 41/…

(1) Display Slide gate left open.

(2) Display Slide gate right closed.

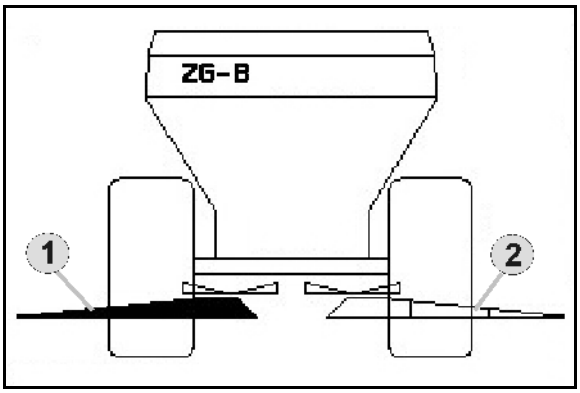

Fig. 41

5.2.2 ZG-B with Trail-Tron

For the use of Trail-Tron, a universal joint shaft sensor or a signal cable from the tractor is necessary!

DANGER

The following are prohibited while the Trail-Tron is switched on:

- **Manoeuvring in the yard**
- **Travelling on the road**

Risk of accident from tipping of the machine!

DANGER

Risk of the machine tipping over when the steering drawbar is pushed in; particularly on very uneven or sloping terrain.

With a loaded or partially loaded machine with tracking steering drawbar, there is a risk of tipping over when performing a turning manoeuvre on a headland at high speeds, due to the shifting of the centre of gravity when the steering drawbar is pushed in. The risk of tipping over is especially high travelling downhill on sloping terrain.

Adapt your driving accordingly and reduce speed when performing a turning manoeuvre on a headland, so that you are in complete control of the tractor and machine.

Safety functions for preventing the machine from tipping over when the Trail-Tron is switched on.

Safety functions!

- If the hydraulic slider is closed on both sides with the tractor universal joint shaft switched on:

→ Trail-Tron is switched to manual mode after 30 seconds (when the drawbar is in central position).

- If the tractor universal joint shaft is switched off:

→ Trail-Tron is switched off (when the drawbar is in its central position).

Switch between manual mode ←→ automatic mode

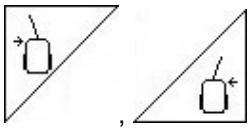

Trail-Tron – Direct drawbar to left / right

- With automatic mode activated, the **Auto** symbol appears in the display. The machine computer ensures the precise tracking of the machine.
- When a travel speed greater than 20 km/h is reached (road travel), the Trail-Tron drawbar moves to the zero setting and remains in on-road mode.

  The road travel symbol appears in the display.

  When the travel speed again drops below 20 km/h, the Trail-Tron switches back to the previously selected mode.
- When manual mode is active, the symbol appears. Press the or key until the tyres of the machine are again exactly in the tractor's tracks.

  The machine realigns itself with the tractor. The selected steering limit is shown in the display.

Displays on the AMATRON 3

Fig. 42:...

(1) Trail-Tron in automatic mode

(2) Trail-Tron in manual mode

(3) Trail-Tron in road travel mode

(4) Trail-Tron safety function active, Trail-Tron is switched off!

(5) Display of current setting angle of steering axle/drawbar.

(6) The drawbar is steered left towards the slope.

(7) The drawbar is steered right towards the slope.

(6,7) Light up simultaneously:
The Trail-Tron works until the drawbar reaches its central position, then the drawbar remains in the central position!

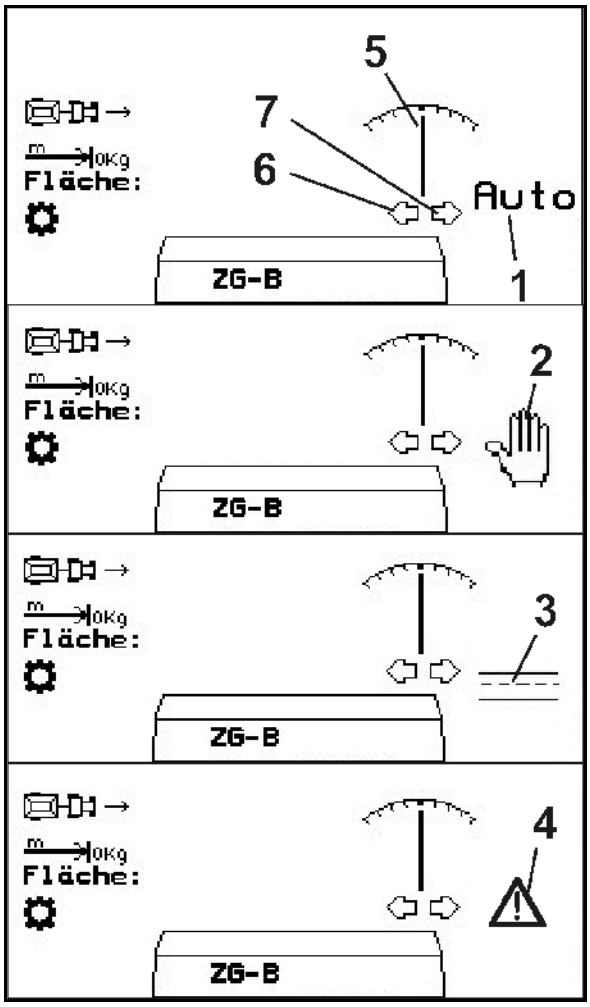

Fig. 42

Transportation

DANGER

Risk of accident from tipping of the machine!

For road transport, set the steering drawbar to transport position!

1. Set the steering drawbar to the central position (steering drawbar (Fig. 43/1) flush with machine).

   To do so:

   1.1 Start up the Trail-Tron in manual operation.

   1.2 , Align the steering drawbar manually.

   → Trail-Tron stops automatically stops when it reaches the central position.

2. Switch off the **AMATRON 3**.
3. Switch off tractor control unit 1 (hose mark 1 x red).

→ Switch off oil circulation.

4. Secure the steering draw bar by closing the stop tap (Fig. 43/2) in Position **0**.

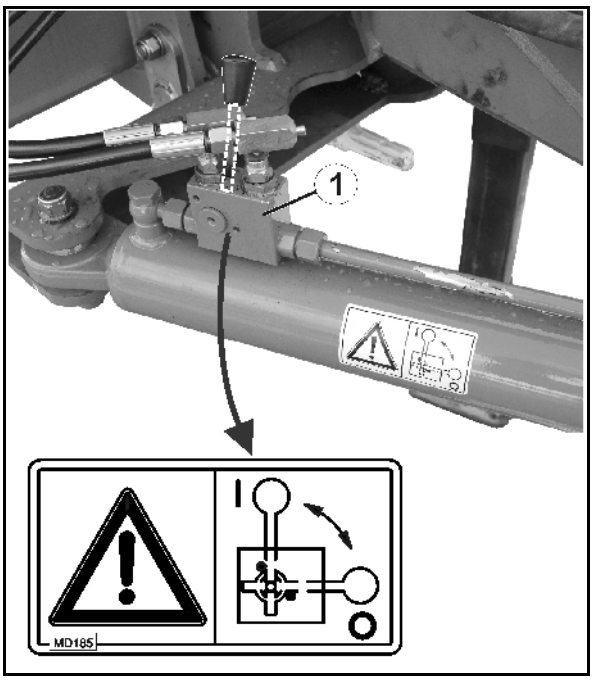

Fig. 43

CAUTION

Risk of collision between tractor wheel and hydraulic cylinder of steering drawbar.

The right-hand steering lock of the tractor with the steering drawbar in transport position is restricted!

5.2.3 Boundary spreading with limiter

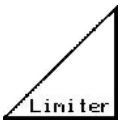

Boundary spreading with limiter on/off

1.

Lower the limiter before boundary spreading.
2. Carry out boundary spreading.
3.

Raise the limiter after boundary spreading.

Before use, set the lowered limiter according to the settings chart, then raise it again

Fig. 44/…

(1) Display Limiter lowered during boundary spreading

(2) Display Limiter preselected with sliders closed.

→ For display, the sensor limited must be fitted.

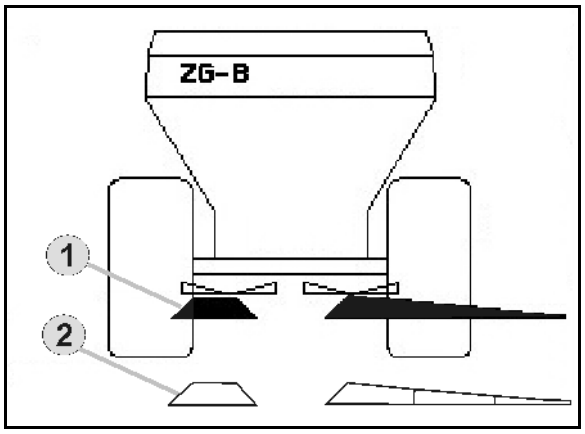

Fig. 44

5.2.4 Changing spread rate on one side (only **ZG-B ultra hydro**)

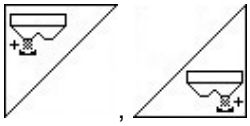

Increase spread quantity left/right.

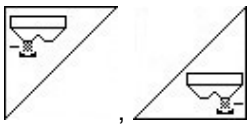

Reduce spread quantity left/right.

- Each press of the key changes the spread amount by the rate increase (e.g. 10%).
- Enter the rate increase in the Machine data menu

Fig. 45/…

(1) Display Changed spread quantity in kg/ha and percent.

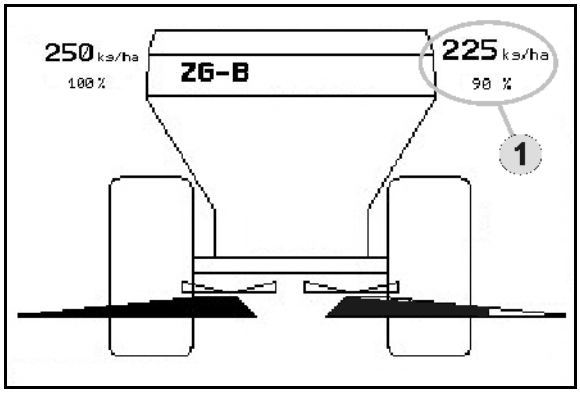

Fig. 45

5.2.5 Tarpaulin

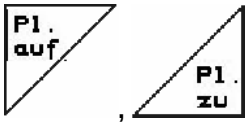

Tarpaulin open/closed.

Press key until tarpaulin is fully opened or closed.

5.2.6 Calibrate fertiliser

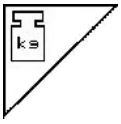

Automatic fertiliser calibration for **weighing spreader**, see page 24.

Fig. 46/…

(1) Display Fertiliser spreader during calibration travel.

Calibrate fertiliser at start of spreading.

(2) Display Scales moving.

(3) Display Dispensed quantity of fertiliser in kg during calibration.

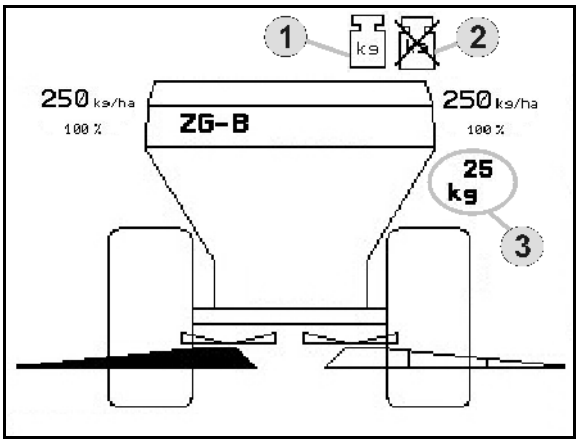

Fig. 46

5.2.7 Add fertiliser (only **ZG-B ultra hydro**)

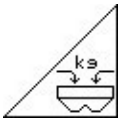

Filling with fertiliser see page 51.

5.2.8 Switching spreader disc drive on and off (only ZG-B ultra hydro)

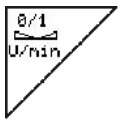

Spreader discs on/of.

To switch on, press the key for at least three seconds until the tone stops.

Enter spreader disc speed in **Machine data** menu.

Fig. 46/…

(1) Display Spreader disc speed

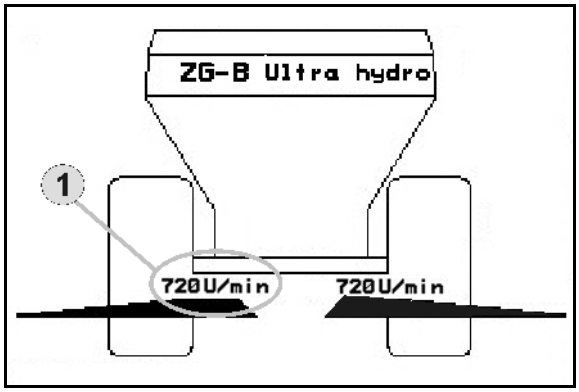

Fig. 47

WARNING

Risk of injury from the rotating discs.

Keep people away from the spreader discs.

5.2.9 Boom part width sections (only ZG-B ultra hydro)

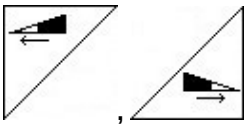

Switch on boom part width sections left, right (3 steps)

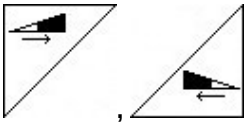

Switch off boom part width sections left, right (3 steps)

Fig. 48/…

(1) Display Two right-hand boom part width sections switched off.

The boom width can be reduced when the discs are closed.

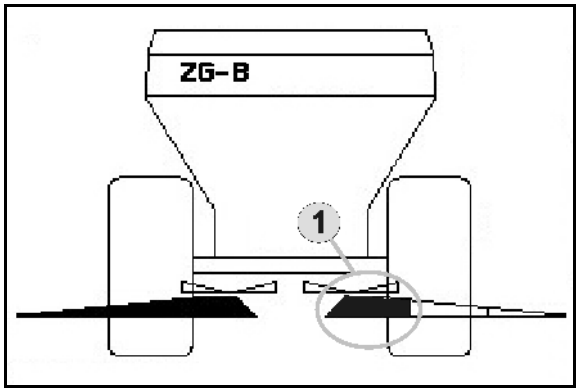

Fig. 48

5.2.10 Boundary spreading (only ZG-B ultra hydro)

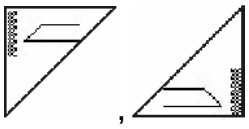	Switch on/off trench spreading left/right.
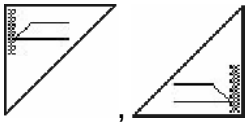	Switch on/off boundary spreading left/right.
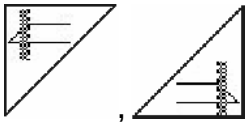	Switch on/off side spreading left/right.

Boundary spreading can also be carried out on both sides.

→ Switch on boundary spreading left and right.

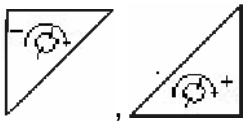

Reduce/increase spreader disc speed on boundary side.

- The boundary spreading speed is increased or reduced by 10 rpm each time the key is pressed.
- The changed speed is stored for later boundary spreading.

- Boundary spreading can be selected once the discs have stopped.
- If the discs are turning, their speed is reduced to the boundary setting.
- The boundary spreading speed is stored in the Machine data menu for the particular boundary spreading type.
- A reduced quantity is entered in the **Machine data** menu for boundary and trench spreading.

Fig. 48/…

(1) Display Boundary spreading on.

(2) Display Reduced spreader disc speed

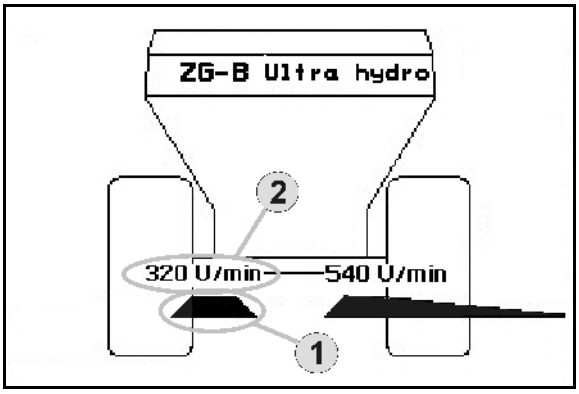

Fig. 49

Boundary spreading can be selected when the discs are closed.

5.3 ZG-B drive

5.3.1 Procedure for use

1. Operate tractor controller 1.

→ Switch on oil circulation.

2. I/0 Switch on the **AMATRON 3**.
3. Esc Select the work menu.
4. Set the universal joint shaft speed (see setting chart).
5. Drive up to spreading area and open double sliders .
6. For the weighing spreader, a calibration run can first be carried out.
7. If boundary, trench or side spreading is done first, Liniter switch on the limiter.

During spreading, the **AMATRON 3** shows the work menu. All the settings required for spreading should be made here.

The data determined are stored for the started job.

> The minimum working speed for **ZG-B drive** is 4 km/h, in order to ensure fault-free working with the **AMATRON 3**.

After use:

1. Close double sliders.
2. Switch off the universal joint shaft.
3. Operate tractor controller 1.

→ Switch off oil circulation.

4. I/0 Switch off the **AMATRON 3**.

5.3.2 Work menu key layout

Page 1: **Description of the function fields:**

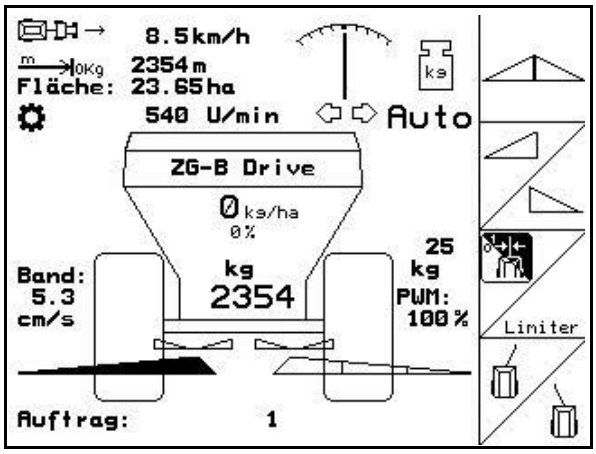

See section
5.2.1
5.2.1
5.2.2 / 5.2.3
5.2.2

WARNING

From 20 km/h travel speed, the Trail-Tron is switched off and the drawbar automatically moves to the central position.

Shift key pressed: **Description of the function fields:**

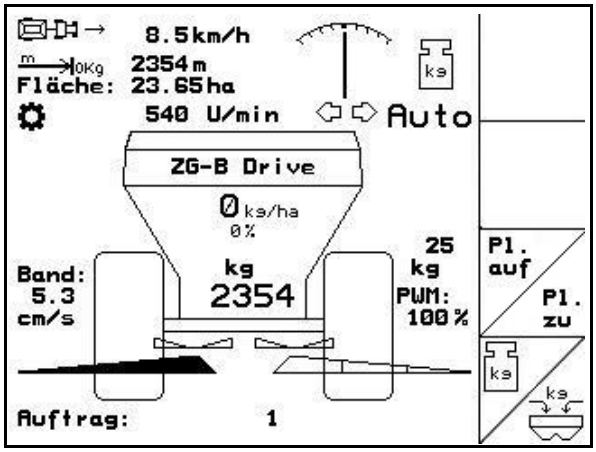

See section
5.2.5
5.2.6 / 5.2.7

Layout for multifunction stick

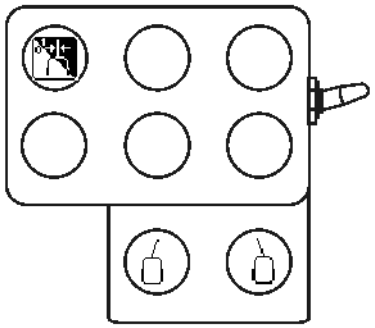

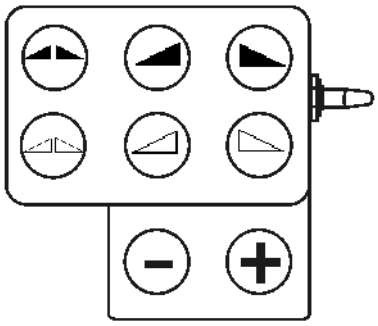

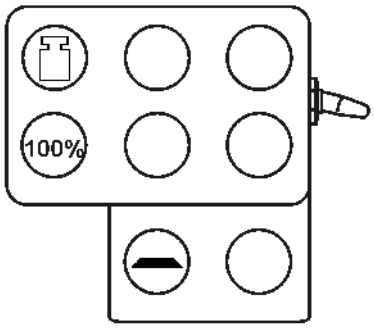

5.4 ZG-B ultra hydro

5.4.1 Procedure for use

1. Operate tractor controller 1.

→ Switch on oil circulation.

2. Switch on the **AMATRON 3**.
3. Select the work menu.
4. Switch on spreader discs.
5. Drive up to spreading area and open the hydraulic sliders .
6. For the weighing spreader, a calibration run can first be carried out.
7. If starting with boundary, trench or side spreading:

   , Select type of boundary spreading and edge of the field (left / right), and switch on.

→ During spreading, the AMATRON 3 shows the work menu. All the settings required for spreading should be made here.

→ The data determined are stored for the started job.

After use:

1. Close the slide gates.
2. Switch off spreader discs.
3. Use the tractor controller to stop the hydraulic fluid supply to the control block.
4. Switch off the **AMATRON 3**.

Page 1: **Description of the function fields:**

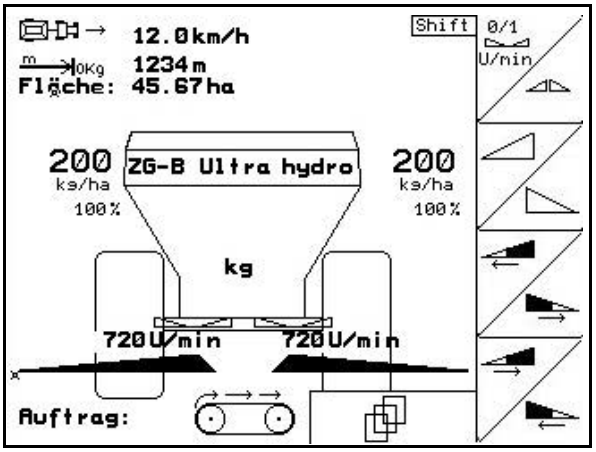

See section
5.2.8 / 5.2.1
5.2.1
5.2.9
5.2.9

Shift key pressed: **Description of the function fields:**

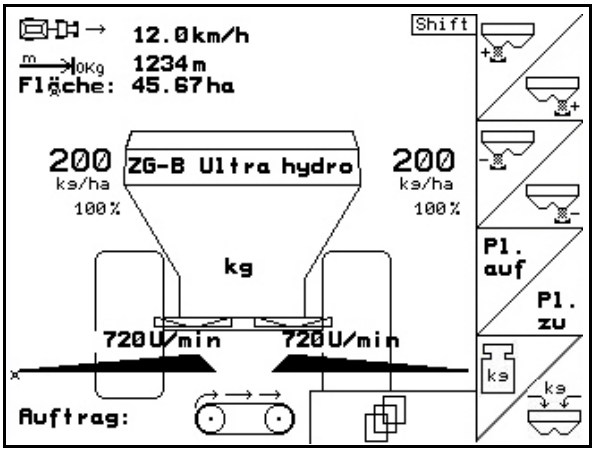

See section
5.2.4
5.2.4
5.2.5
5.2.6 / 5.2.7

Page 2: **Description of the function fields:**

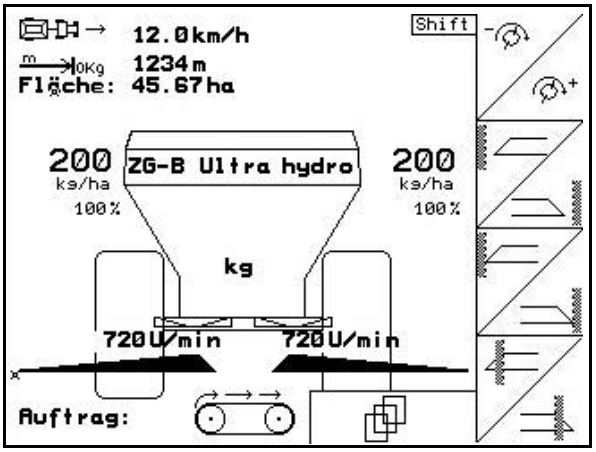

See section
5.2.10
5.2.10
5.2.10
5.2.10

Layout for multifunction stick

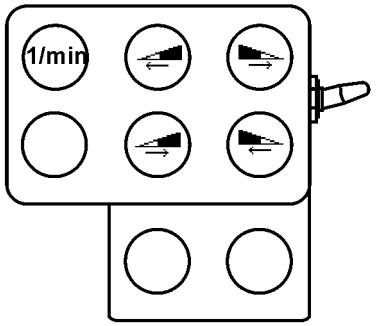

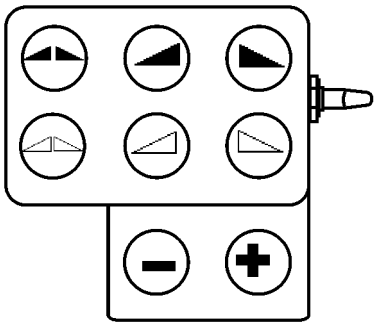

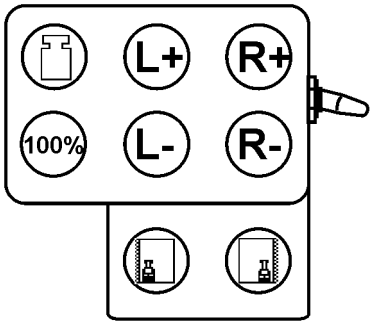

5.5 Filling with fertiliser

- In the work menu (Fig. 50).
- In Machine data menu page one (Fig. 51).

1. Open the fill menu.
2. Fill with fertiliser.

Fertiliser spreader without weighing cell:

→ Enter amount of fertiliser in kg.

Fertiliser spreader with weighing cell

→ Added quantity of fertiliser is displayed in kg.

Confirm quantity (Fig. 52).

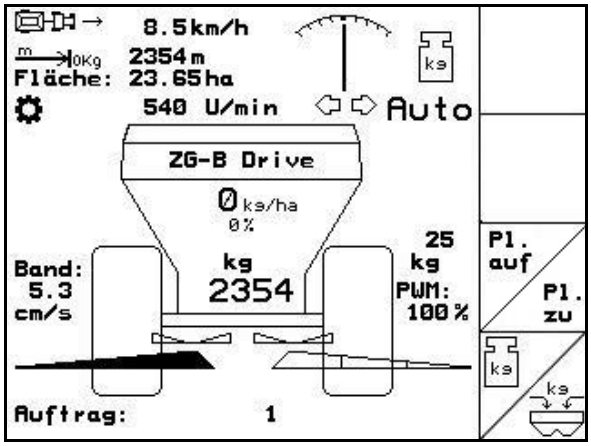

Fig. 50

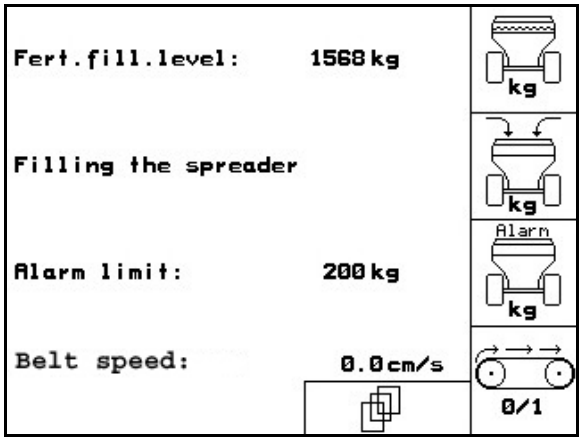

Fig. 51

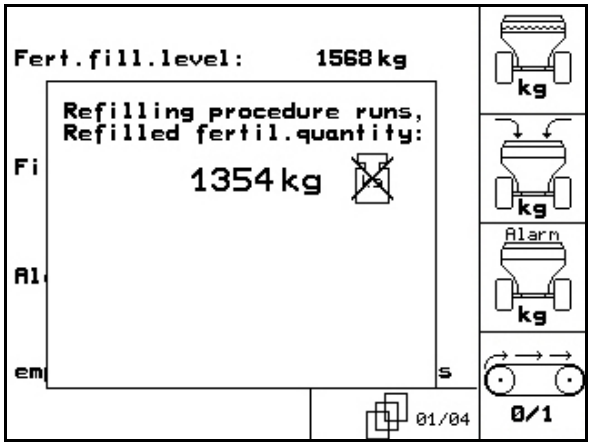

Fig. 52

5.6 Emptying the fertiliser hopper

Residual fertiliser remaining in the fertilise hopper can be drained off via

- the hopper tips in the **ZG-B ultra hydro**.
- the floor belt in the **ZG-B drive**.

ZG-B drive (Fig. 53)

1. Remove the spreader discs (see machine operating manual)
2. Machine data menu:

   Switch on the floor belt

→ The double sliders open automatically.

→ Residual fertiliser is removed from the hopper.

3.

   Switch off the floor belt

→ For safety reasons, the double sliders remain open.

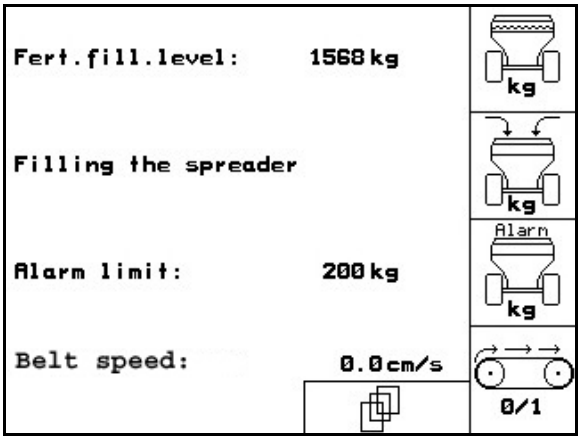

Fig. 53

ZG-B ultra hydro (Fig. 54)

1. Remove the spreader discs (see machine operating manual)
2. **Machine data** menu:

   Drain hopper submenu (Fig. 55).

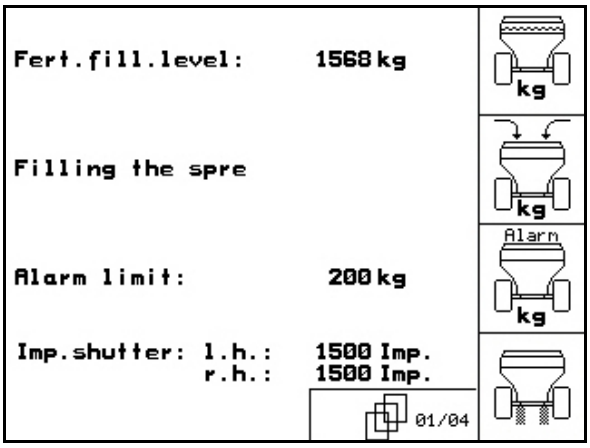

Fig. 54

3. , Open dosing sliders, left and right.

4. , Open hydraulic sliders, left and right ( ).

5. Switch on the floor belt.

→ Residual fertiliser is removed from the hopper.

→ During emptying, the agitator is switched on.

6. Switch off the floor belt.

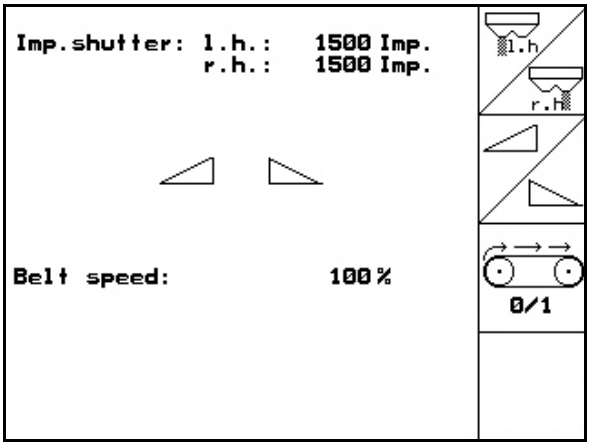

Fig. 55

- Stow the machine with the sliders opened.
- Close the sliders before refilling.

WARNING

Risk of injury in area of hopper tips from driven agitator!

Never reach through the slider opening or insert objects into the slider opening from below.

6 Multifunction stick

6.1 Installation

The multifunction stick (Fig. 56/1) is attached with 4 screws at a convenient location in the tractor cab.

To connect, insert the connector of the basic equipment into the 9-pin Sub-D-bushing of the multifunction stick (Fig. 56/2).

Insert the connector (Fig. 56/3) from the multifunction stick into the centre sub-D socket on the **AMATRON 3**.

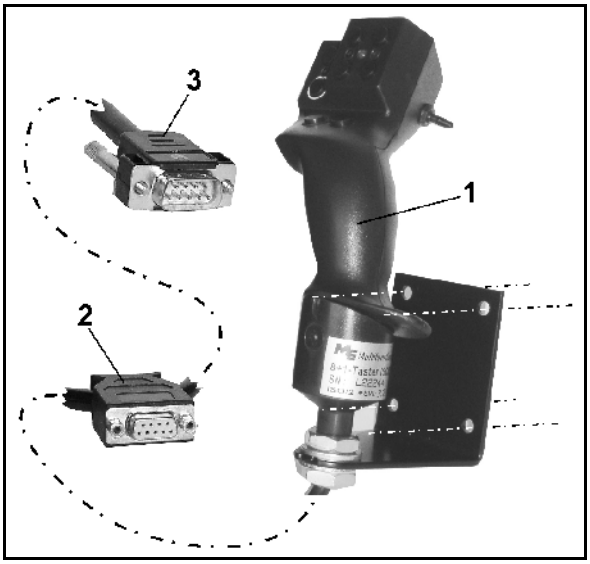

Fig. 56

6.2 Function

The multifunction stick functions are only found in the **AMATRON 3** work menu. It allows blind operation of the **AMATRON 3** in use on the field.

To operate the **AMATRON 3**, the multifunction stick (Fig. 57) has 8 buttons (1 - 8). In addition, the assignment of the keys can be changed 3-fold by means of a switch (Fig. 58/2).

The switch default position is

- central position (Fig. 58/A) and can be pressed
- up (Fig. 58/B) or
- down (Fig. 58/C).

The position of the switch is indicated by an LED (Fig. 58/1).

- LED yellow
- LED red
- LED green

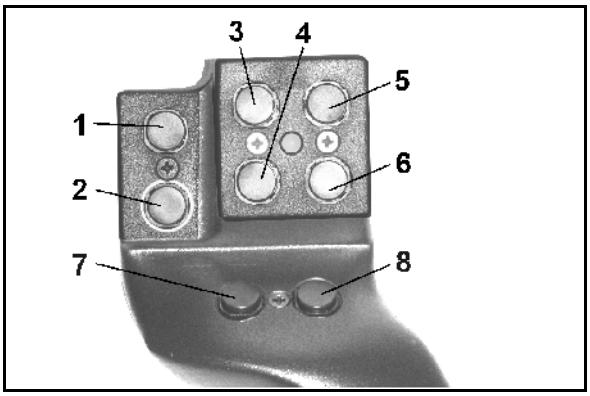

Fig. 57

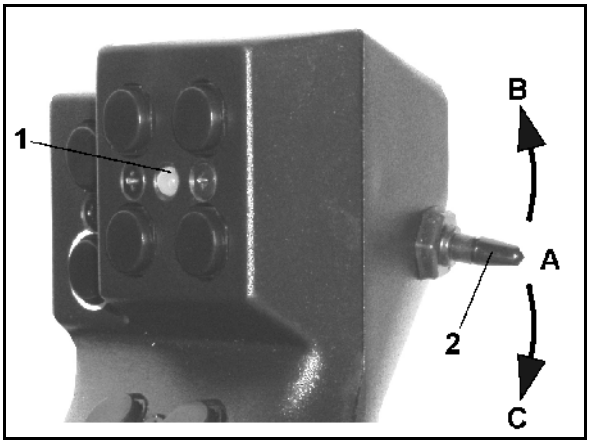

Fig. 58

6.3 Key layout:

Key	ZG-B Drive	ZG-B Ultra hydro
1	Trail-Tron on/off	Spreader disc drive on/off
2		
3		Switch on boom part width sections left
4		Switch off boom part width sections left
5		Switch on boom part width sections on right
6		Switch off boom part width sections on right
7	Drawbar ←	
8	Drawbar →	
1	Both slide gates open	
2	Both slide gates closed	
3	Left slide gate open	
4	Left slide gate closed	
5	Right slide gate open	
6	Right slide gate closed	
7	- Rate increase [%]	
8	+ Rate increase [%]	
1	Start calibration (only with weighing cell).	
2	Quantity 100%	
3		Left + rate increase [%]
4		Left - rate increase [%]
5		Right + rate increase [%]
6		Right - rate increase [%]
7	**Limiter** on/off	Boundary spreading left
8	y	Boundary spreading right

7 Maintenance and cleaning

WARNING

Perform maintenance and cleaning only with the spreader discs and agitator shaft drive switched off.

7.1 Cleaning

DANGER

Do not reach into the outlet opening while operating the sliders! Risk of crushing!

ZG-B ultra hydro:

To clean the fertiliser spreader, you must have the hydraulic sliders and the electric dosing sliders open so the water and residual fertiliser can drain.

- Opening/closing dosing sliders (see Machine data menu, page 13).
- Open/close slide gates (see work menu).

7.2 Basic slider setting

ZG-B ultra hydro:

The amount of cross-sectional clearance of the electric dosing sliders is set at the factory (Fig. 59).

If, despite identical slider positions, you find that the two hopper tips are not emptying uniformly, check the basic setting of the sliders.

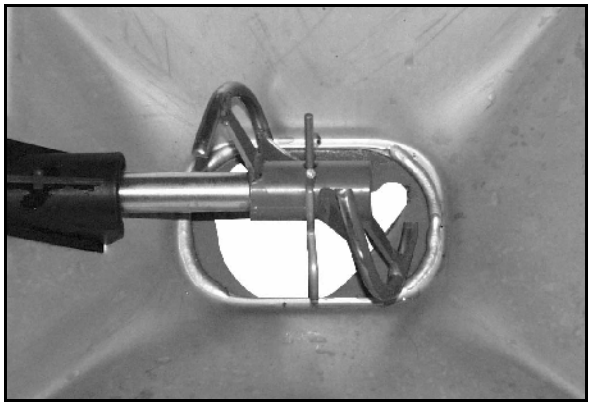

Fig. 59

Adjust the basic setting for both dosing sliders using the Service set-up menu:

1. Press .

Page two (Fig. 60)

2. Set left slider position.

3. Set right slider position.

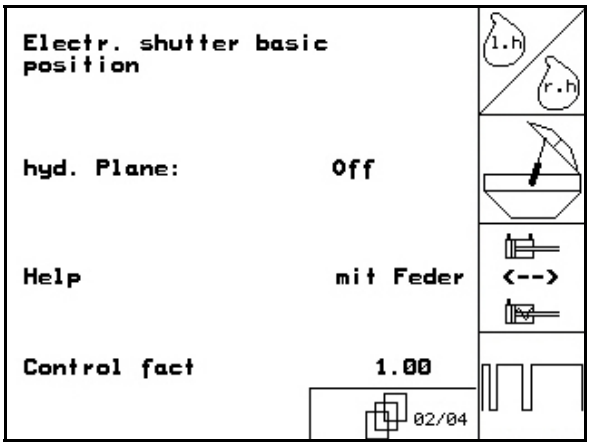

Fig. 60

4. to 0 Close the outlet fully (0 impulses).

5. to 1500 Open the outlet to 1500 impulses.

DANGER

Risk of injury near dosing sliders when key pressed, to 1500, to 0, +5, -5 because the sliders close before the selected setting is applied.

Keep fingers and gauges away from the opening.

6. Insert the setting gauge (Fig. 62/1) (Option, order no.: 915018) slightly into the opening.
   - The gauge **cannot** be inserted through the opening:

     +5 Increase the current offset by 5 impulses until the gauge fits exactly in the opening (Fig. 63).
   - Too much gauge clearance:

     -5 Reduce the current offset by 5 impulses until the gauge fits exactly in the opening (Fig. 63).

7. Confirm the position with the input key.

Impulse Display 1/0 The setting motor impulses (Fig. 64/1) can be displayed in the work menu.

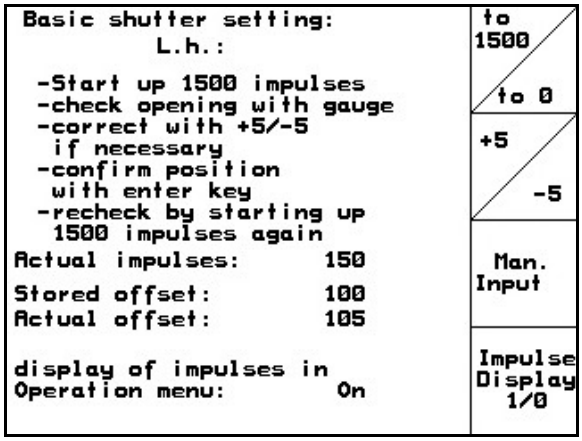

Fig. 61

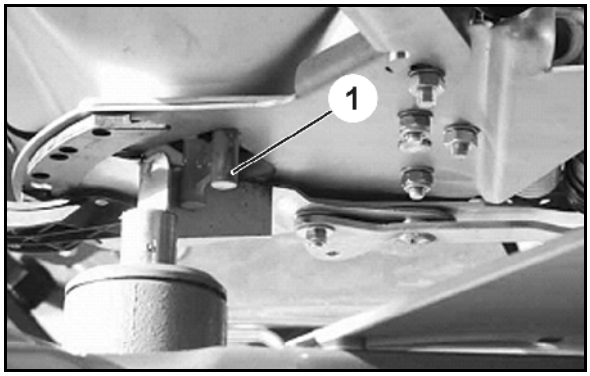

Fig. 62

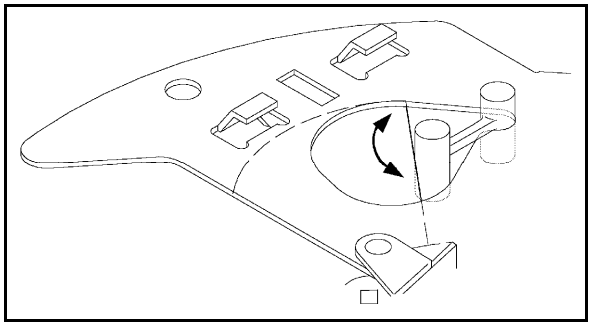

Fig. 63

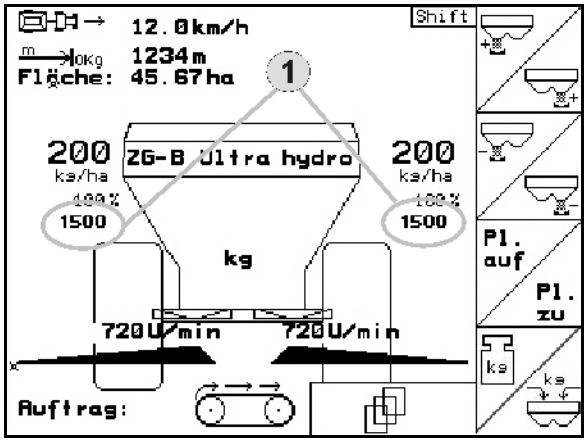

Fig. 64

8 Malfunction

8.1 Alarm

Uncritical alarm:

A fault message (Fig. 65) appears at the bottom of the display and an acoustic alarm sounds three times. Rectify the fault if possible.

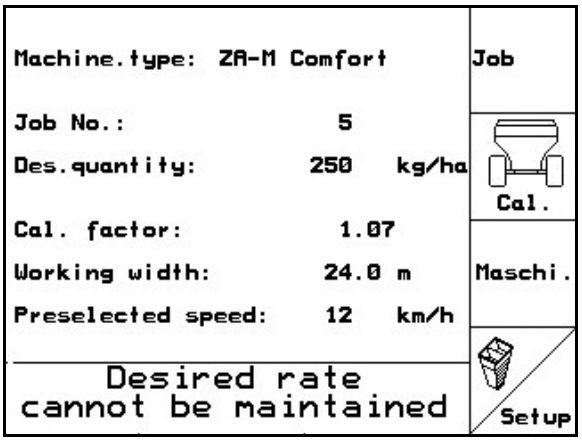

Fig. 65

Critical alarm:

A warning message (Fig. 66) appears in the middle of the display and an acoustic alarm is given.

1. Read the warning message on the display.
2. Confirm the warning message.

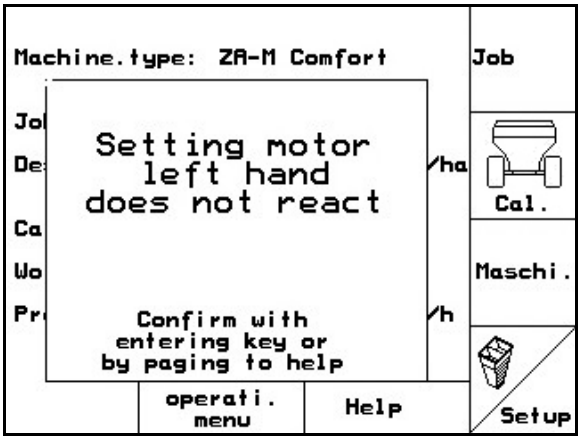

Fig. 66

8.2 Distance sensor (impulses/100 m failure)

Entering a simulated speed in the **Setup** menu allows you to continue spreading if the sensor fails.

To do so:

1. Remove the signal cable from the tractor basic equipment.
2.

Enter a simulated speed.
3. Maintain the simulated speed as you continue spreading.

> As soon as impulses are registered by the distance sensor, the computer switches to the actual speed of the distance sensor.

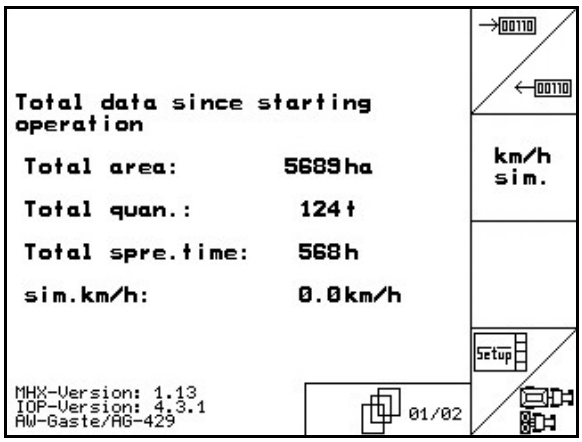

Fig. 67

AMAZONEN-WERKE

H. DREYER GmbH & Co. KG

Postfach 51
D-49202 Hasbergen-Gaste
Germany

Tel.: + 49 (0) 5405 501-0
Fax: + 49 (0) 5405 501-234
e-mail: amazone@amazone.de
http:// www.amazone.de

Plants: D-27794 Hude • D-04249 Leipzig • F-57602 Forbach
Branches in England and France

Manufacturers of mineral fertiliser spreaders, field sprayers, seed drills, soil cultivation machines, multipurpose warehouses and communal units