Operating Manual

AMAZONE

Software AMABUS

ZA-M

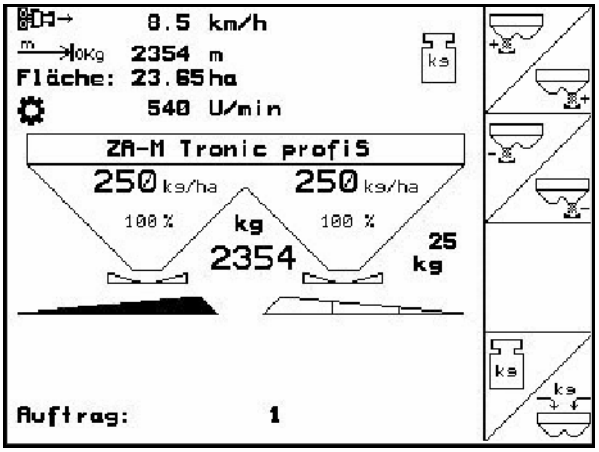

MG4544
BAG0116.0 12.12
Printed in Germany

Please read this operating manual before first commissioning.
Keep it in a safe place for future use.

en

Reading the instruction

Manual and following it should seem to be inconvenient and superfluous as it is not enough to hear from others and to realize that a machine is good, to buy it and to believe that now everything should work by itself. The person in question would not only harm himself but also make the mistake of blaming the machine for possible failures instead of himself. In order to ensure success one should enter the mind of a thing, make himself familiar with every part of the machine and get acquainted with how it's handled. Only in this way could you be satisfied both with the machine and with yourself. This goal is the purpose of this instruction manual.

Leipzig-Plagwitz 1872. Rud. Sack.

Formalities of the operating manual

Document number: MG4544

Compilation date: 12.12

© Copyright AMAZONEN-WERKE H. DREYER GmbH & Co. KG, 2010

All rights reserved.

Reprinting, even of sections, only possible with the approval of AMAZONEN-WERKE H. DREYER GmbH & Co. KG.

Foreword

Dear Customer,

You have chosen one of the quality products from the wide product range of AMAZONEN-WERKE, H. DREYER GmbH & Co. KG. We thank you for your confidence in our products.

On receiving the machine, check to see if it was damaged during transport or if parts are missing. Using the delivery note, check that the machine was delivered in full including the ordered special equipment. Damage can only be rectified if problems are signalled immediately!

Before first commissioning, read and understand this operating manual, and particularly the safety information. Only after careful reading will you be able to benefit from the full scope of your newly purchased machine.

Please ensure that all the machine operators have read this operating manual before commissioning the machine.

Should you have problems or queries, please consult this operating manual or give us a call.

Regular maintenance and timely replacement of worn or damaged parts increases the lifespan of your machine.

User evaluation

Dear Reader,

We update our operating manuals regularly. Your suggestions for improvement help us to create ever more user-friendly manuals. Send us your suggestions by fax.

AMAZONEN-WERKE

H. DREYER GmbH & Co. KG

Postfach 51

D-49202 Hasbergen

Tel.: + 49 (0)5405 501-0

Fax: + 49 (0)5405 501-234

E-mail: amazone@amazone.de

1 User Information ... 6
1.1 Purpose of the document ... 6
1.2 Locations in the operating manual ... 6
1.3 Diagrams used ... 6

2 General safety instructions ... 7
2.1 Representation of safety symbols ... 7

3 Product description ... 8
3.1 Software version ... 8
3.2 Entries on **AMATRON 3** ... 9
3.3 Hierarchy of the software ... 10

4 Commissioning ... 11
4.1 Main menu ... 11
4.2 Entering machine data ... 12
4.2.1 Configuring quantity reduction (machine data) ... 14
4.2.2 Calibrating distance sensor (machine data) ... 15
4.2.3 Entering power take-off speed (machine data) ... 16
4.3 Starting a job ... 18
4.3.1 External job ... 19
4.4 Calibrating fertiliser ... 20
4.4.1 Determining fertiliser calibration factor at standstill ... 21
4.4.2 Conduct fertiliser calibration run (offline calibration) ... 23
4.4.3 Calibrate permanent fertiliser (online calibration) ... 25
4.4.4 Calibration of slug pellets ... 27
4.5 Service Setup ... 30
4.5.1 Taring/calibrating weighing cell ... 32
4.6 Mobile test rig ... 33

5 Use on the field ... 34
5.1 Work menu display ... 35
5.2 Functions in work menu ... 36
5.2.1 Slide gate (**ZA-M Comfort**, **Hydro** only) ... 36
5.2.2 Boundary spreading with limiter ... 36
5.2.3 Changing spread quantity left/right ... 37
5.2.4 Tarpaulin (**ZA-M Comfort**, **Hydro** only) ... 37
5.2.5 Calibrating fertiliser (**ZA-M Profis** only) ... 38
5.2.6 Filling with fertiliser ... 38
5.2.7 Switching spreading disc drive on and off (**ZA-M Hydro** only) ... 39
5.2.8 Boom part width sections (**ZA-M Hydro** only) ... 40
5.2.9 Boundary spreading (**ZA-M Hydro** only) ... 41
5.3 **ZA-M Tronic** ... 42
5.3.1 Procedure for use ... 42
5.3.2 Work menu key layout ... 42
5.4 **ZA-M Comfort** ... 44
5.4.1 Procedure for use ... 44
5.4.2 Work menu key layout ... 45
5.5 **ZA-M Hydro** ... 47
5.5.1 Procedure for use ... 47
5.5.2 Work menu key layout ... 48
5.6 Filling with fertiliser ... 50
5.7 Emptying fertiliser hopper ... 51

6 Multifunction stick ... 52
6.1 Installation ... 52
6.2 Function ... 52

6.3 Key layout: 53

7 Maintenance and cleaning 54

7.1 Cleaning 54

7.2 Basic slide setting 54

8 Malfunction....56

8.1 Alarm....56

8.2 Error messages and remedies....57

8.3 Failure of setting motors 61

8.4 Distance sensor (pulses/100 m failure) 62

1 User Information

The User Information section supplies information on use of the operating manual.

1.1 Purpose of the document

This operating manual

- Describes the operation and maintenance of the machine.
- Provides important information on safe and efficient handling of the machine.
- Is a component part of the machine and should always be kept with the machine or the traction vehicle.
- Keep it in a safe place for future use.

1.2 Locations in the operating manual

All the directions specified in the operating manual are always seen from the direction of travel.

1.3 Diagrams used

Handling instructions and reactions

Activities to be carried out by the user are given as numbered instructions. Always keep to the order of the handling instructions. The reaction to the handling instructions is given by an arrow.

Example:

1. Handling instruction 1

→ Reaction of the machine to handling instruction 1

2. Handling instruction 2

Lists

Lists without an essential order are shown as a list with bullets.

Example:

- Point 1
- Point 2

Number items in diagrams

Numbers in round brackets refer to the item numbers in the diagrams. The first number refers to the diagram and the second number to the item in the figure.

Example: (Fig. 3/6)

- Figure 3
- Item 6

2 General safety instructions

Knowledge of the basic safety information and safety regulations is a basic requirement for safe handling and fault-free machine operation.

The operation manual

- Must always be kept at the place at which the machine is operated.
- Must always be easily accessible for the user and maintenance personnel.

2.1 Representation of safety symbols

Safety instructions are indicated by the triangular safety symbol and the highlighted signal word. The signal word (DANGER, WARNING, CAUTION) describes the gravity of the risk and has the following significance:

DANGER

Indicates an immediate high risk which will result in death or serious physical injury (loss of body parts or long term damage) if not avoided.

If the instructions are not followed, then this will result in immediate death or serious physical injury.

WARNING

Indicates a medium risk, which could result in death or (serious) physical injury if not avoided.

If the instructions are not followed, then this may result in death or serious physical injury.

CAUTION

Indicates a low risk which could incur minor or medium level physical injury or damage to property if not avoided.

IMPORTANT

Indicates an obligation to special behaviour or an activity required for proper machine handling.

Non-compliance with these instructions can cause faults on the machine or in the environment.

NOTE

Indicates handling tips and particularly useful information.

These instructions will help you to use all the functions of your machine to the optimum.

3 Product description

AMAZONE machines are easy to control, operate and monitor when using the **AMBUS** software and the in-cab terminal **AMATRON 3**.

The **AMBUS** software works with the following **AMAZONE** machines:

- **ZA-M Tronic** with power take-off
- **ZA-M Comfort**
  - with hydraulic control block for the slide gate, limiter and tarpaulin (depending on configuration)
  - with power take-off
- **ZA-M Hydro**
  - with hydraulic spreading disc drive
  - with hydraulic control block for the slide gate, limiter and tarpaulin (depending on configuration)
  - with weighing equipment.
- **ZA-M Profis** with weighing equipment.

The **AMBUS** software controls the application rate according to forward speed. Depending on the machine and its configuration, a press of a button allows you:

- to change the spread rate into pre-specified steps (e.g. +/- 10%)
- to calibrate the amount of fertiliser while driving (weighing spreader only)
- easy boundary spreading
- wedge-shaped field spreading (**ZA-M hydro** only).

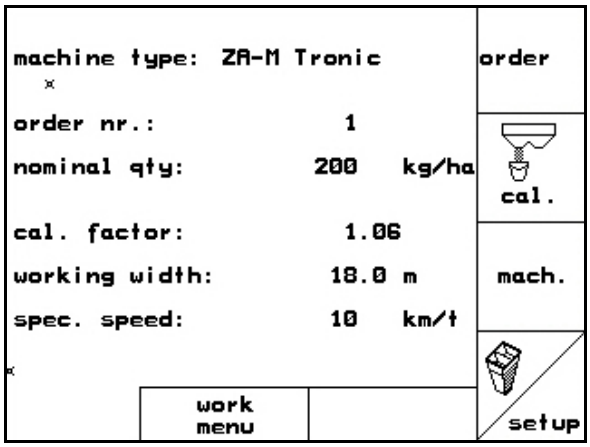

Fig. 1

Main menu (Fig. 1)

The main menu contains several submenus for making settings before starting work, such as

- entering details,
- determining or entering settings.

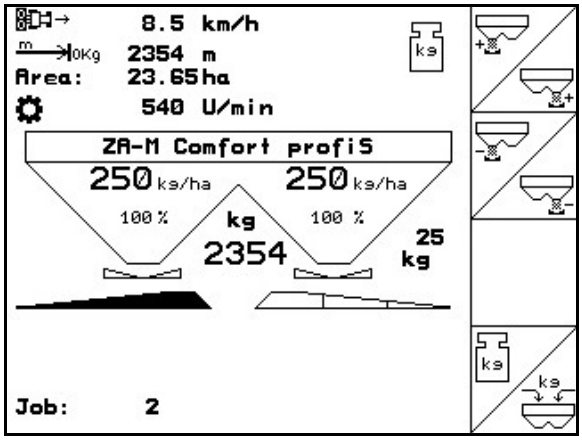

Fig. 2

Work menu (Fig. 2)

- The work menu displays all necessary spreading details as you go.
- It is used to control the machine as you work.

3.1 Software version

This operating manual is valid from software version:

Machine: MHX version: 2.32.01

3.2 Entries on AMATRON 3

For operation of the **AMATRON 3**, the function fields appear in this operating manual in order to make clear that the key for the respective function field must be pressed.

Example:

- Function field A:

Description in the operating manual:

A Perform function **A**.

Action:

The operator uses the key (Fig. 3/1) assigned to the function field to perform function **A**.

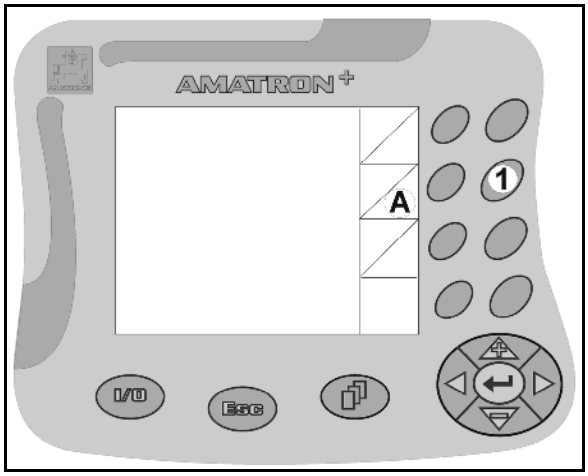

Fig. 3

3.3 Hierarchy of the software

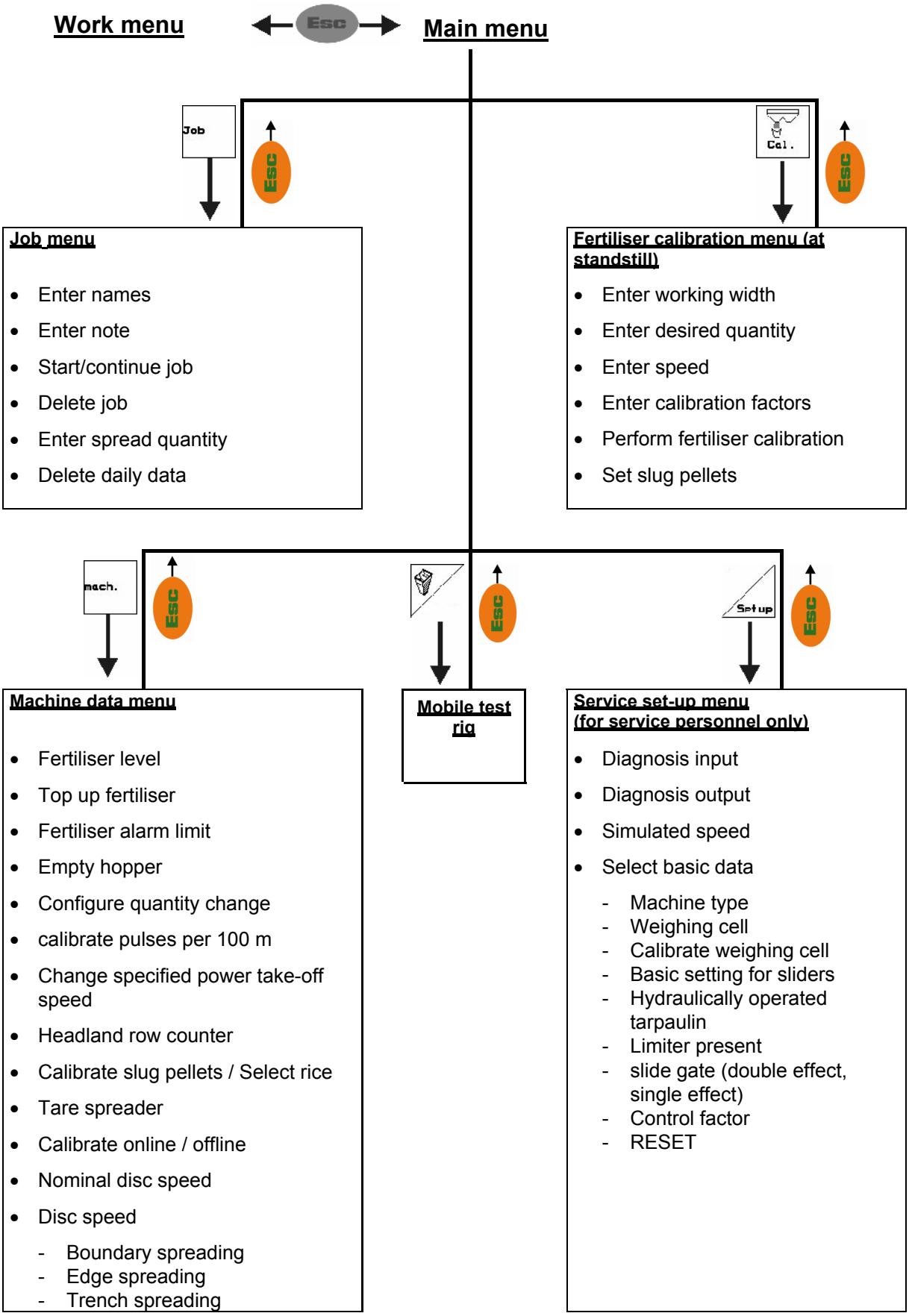

4 Commissioning

4.1 Main menu

-

Job menu (page 18)
  - o Data entry for new job.
  - o Start job before beginning spreading.
  - o The data for up to 20 jobs are stored

-

Calibrate fertiliser menu (page 20)
  - o Before each use, determine the calibration factor for the fertiliser to be spread).

  On the **ZA-M Profis**, you can
  - o calculate the calibration factor during a calibration travel (page 23).
  - o use online calibration to calibrate the calibration value while spreading (page 25).

-

Slug pellet menu (page 27)
  - o Replaces the **calibrate fertiliser** menu when spreading pellets.
  - o The **Slug pellet** menu is activated from the **Machine data** menu.

-

Machine data menu (page 12)
  - o Input of machine-specific or individual data.

-

Setup menu (page 30)
  - o Input of basic settings

-
Mobile test rig menu (page 33)
  - o For calibrating the vane setting when checking lateral distribution with the mobile test rig. (refer to the operating manual for the mobile test rig).

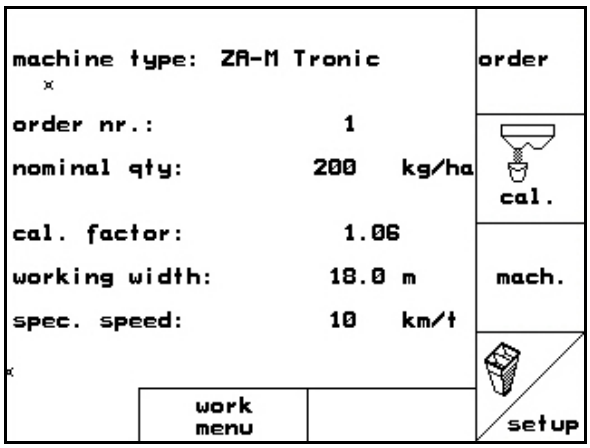

Fig. 4

4.2 Entering machine data

Select **Machine data** in the main menu.

Page one (Fig. 5)

- Enter fertiliser quantity in kg (not **ZA-M Profis**).
- Fill with fertiliser (see page 50).
- Enter alarm limit for residual quantity in kg.
- , Open/close dosing slider (to empty hopper, see page 51).

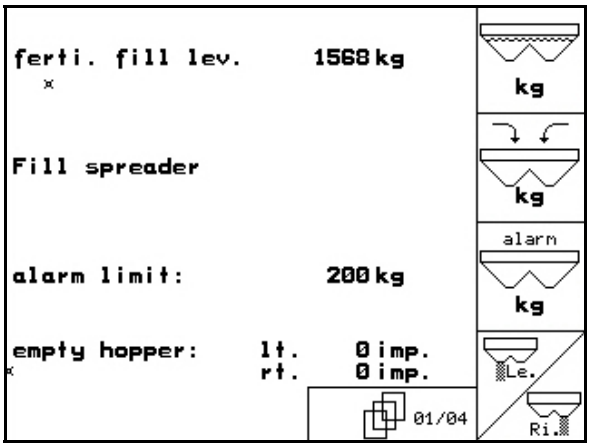

Fig. 5

Page two (Fig. 6)

- Configuring quantity change (see page 14).
- Determine pulses per 100 m (see page 15).
- Enter specified power take-off speed (see page 16, not possible with **ZA-M Hydro**).

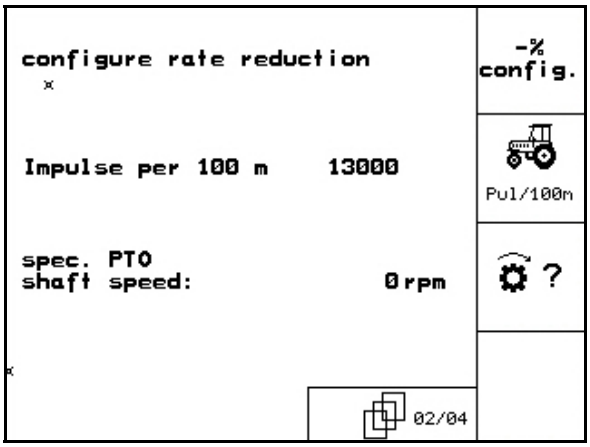

Fig. 6

Page three (Fig. 7)

- Row counter on/off:

  The stored headland distance is displayed to locate the tramlines. The counter starts displaying the tramlines when the slide gates are being closed.

- Spread rice on/off.

- Spread slug pellets on/off.
  On: **calibrate slug pellets** appears in main menu (page 27).

> **CAUTION**
>
> There is a risk of injury from the dosing sliders when **Spread slug pellets** is switched on because the sliders close automatically.

- Tare spreader, e.g. after fitting special accessories (see page 32).
  - Empty the spreader completely, wait for the symbol to go out,
  - then confirm .

- Select "Turning method in the field".
  - Online calibration (see page 25)
  - Offline calibration (see page 23)

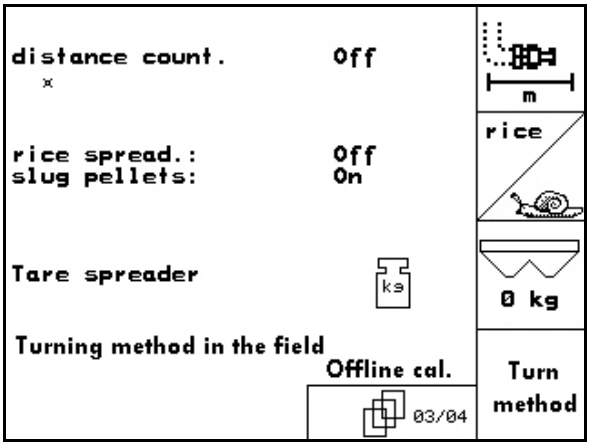

Fig. 7

Page four (Fig. 8)

ZA-M Hydro

- : enter spreader disc speed in rpm (see settings chart, standard = 720 rpm.)
- Spreader disc speed in rpm for boundary spreading.
- Spreader disc speed in rpm for trench spreading.
- Spreader disc speed in rpm for side spreading.

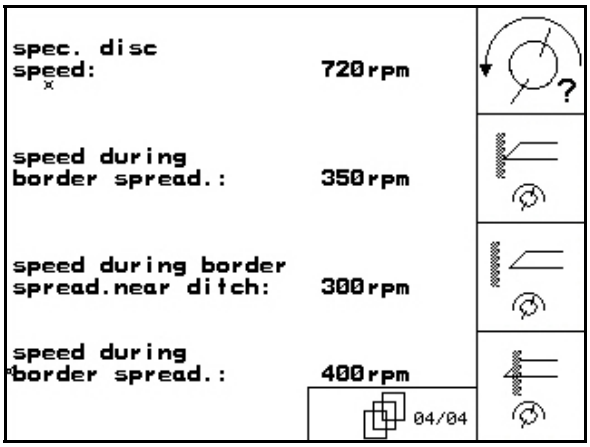

Fig. 8

4.2.1 Configuring quantity reduction (machine data)

- Enter percentage application rate increase (value for percent change while working).
- all **ZA-M**s: quantity reduction during boundary spreading
- **ZA-M Hydro**: quantity reduction during trench spreading
- **ZA-M Hydro**: quantity reduction during side spreading

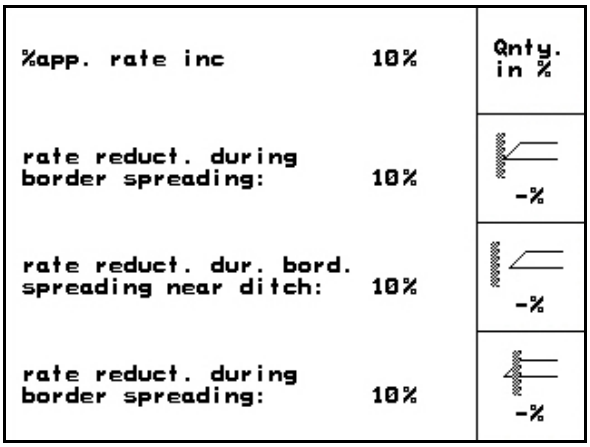

Fig. 9

4.2.2 Calibrating distance sensor (machine data)

The **AMATRON 3** needs the pulse/100 m value to determine the actual speed.

This value must not be less than 250, otherwise the **AMATRON 3** will not function properly.

For machines that are connected to an ISOBUS tractor using the ISOBUS light cabling.

- **Value for "Pulse per 100 m": enter 0.**

There are two possibilities for entering pulses/100 m:

- man. entry The value is known and is entered in the **AMATRON 3** manually.
- The value is **not** known and is determined by travelling a calibration distance of 100 m.

1. On the field, measure out a calibration distance of exactly 100 m. Mark the start and end point of the calibration distance (Fig. 11).
2. start Start the calibration.
3. Drive the exact calibration distance from the start to the end point.

→ When you start, the counter returns to 0.

→ The continuously determined pulses are indicated on the display.

4. Stop after 100 m.

→ The determined number of pulses is now indicated on the display.

5. apply pulses/100 m value.

→ The value is assigned to the tractor selected in the memory.

- Esc Reject pulses/100 m value.

If an all-wheel drive is used on the field, it must also be switched on during distance sensor calibration.

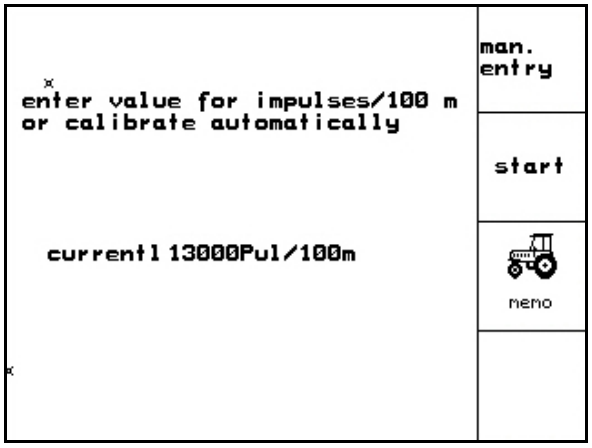

Fig. 10

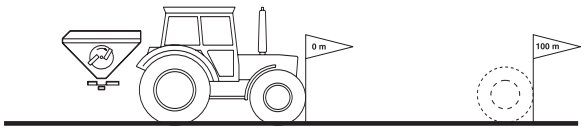

Fig. 11

memo The pulse/100 m value can be stored for 3 tractors:

1. , Select tractor →
2. tractor change Enter/change name
3. new imp. Enter pulse/100 m for selected tractor

If a tractor has already been stored here, its pulse/100 m and power take-off speed values will be used.

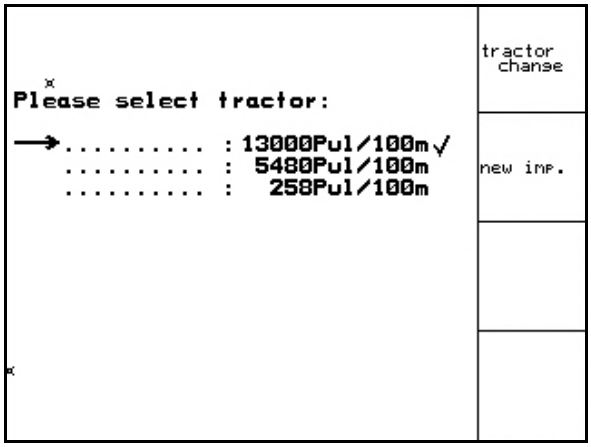

Fig. 12

4.2.3 Entering power take-off speed (machine data)

- Only for tractors with power take-off speed recording.

- rpm Enter specified power take-off speed
  - o 540 rpm, 720 rpm
    → Standard speed
  - o 0 rpm:
    →no power take-off sensor fitted / monitoring not wanted.
- imp/rev Enter pulse per power take-off revolution (ask dealer).
- memo Select memory for 3 tractors with associated power take-off speed.

1. , Select tractor →
2. Tractor Change Enter/change name
3. New rev.'s Enter power take-off speed.

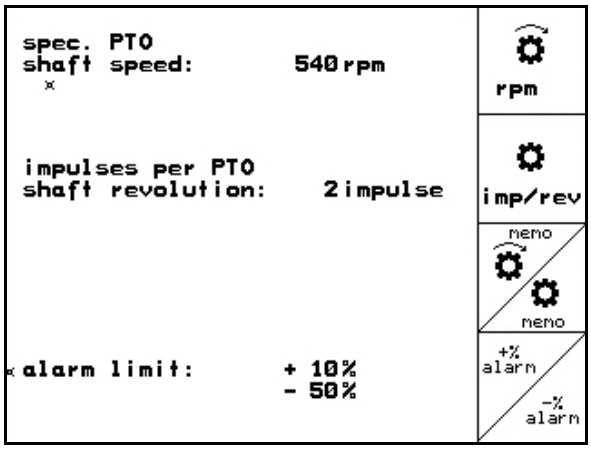

Fig. 13

-

Memory for 3 tractors with associated value for pulses/revolution

1. , Select tractor →
2.

Enter/change name
3.

Enter pulses/revolution for power take-off.
4.

Enter upper alarm limit in %. (Standard value = 10 %).
5.

Enter lower alarm limit in %. (Standard value = 10 %).

4.3 Starting a job

Select **Job** in main menu.

When the Job menu is opened, the most recently started (most recently processed) job appears.

Information on max. 20 jobs can be stored (job numbers 1 to 20).

To create a new job, select a job number (Fig. 14/1).

-

Enter name
-

Enter note
-

Enter desired quantity
-

Start the job so that data can be stored with this job.
-

Delete the data for the selected job
-

Delete daily data
  - Worked area (ha/day)
  - Fertiliser quantity dispensed (quantity/day)
  - Work time (hours/day).

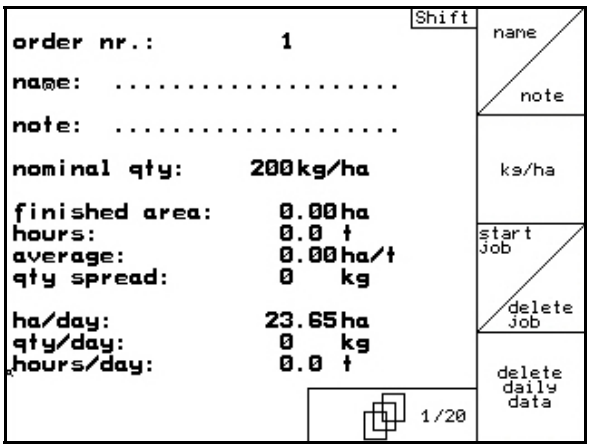

Fig. 14

Already stored jobs can be called up with and restarted with

.

With the shift key pressed (Fig. 15):

- job forward Scroll forward through job.
- job back Scroll backward through job.

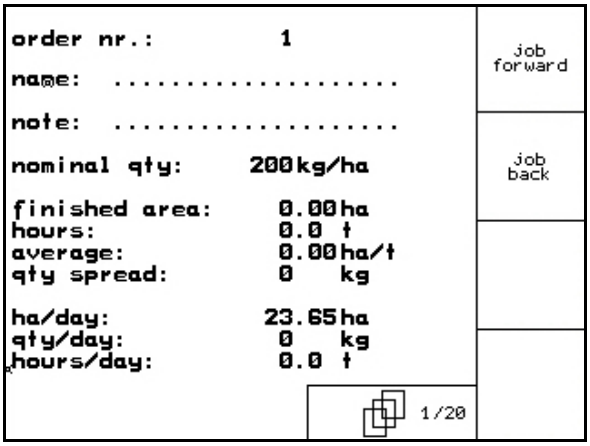

Fig. 15

4.3.1 External job

Using a PDA, an external job can be transferred to the **AMATRON 3** and then started.

This job is always given the job number 21.

The data is transferred via the serial interface.

- end external order End the external job.

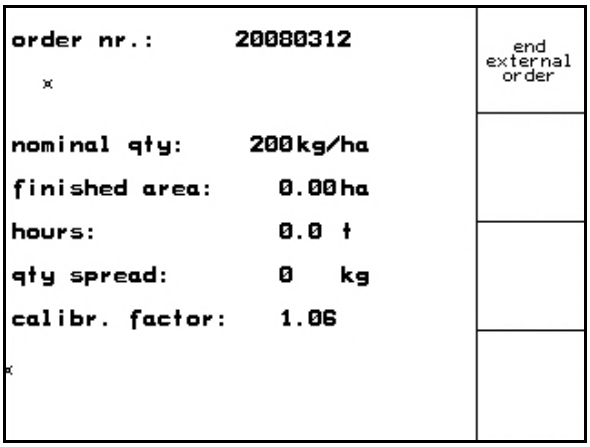

Fig. 16

4.4 Calibrating fertiliser

Select **calibrate fertiliser** in main menu.

The fertiliser calibration factor determines the regulating behaviour of the **AMATRON 3** and is dependent on

- the flow characteristics of the fertiliser to be spread
- the entered spread rate
- the entered working width

The fertiliser flow characteristics depend on:

- storage, storage time and climatic factors
- working conditions.

The calibration value is determined differently for each spreader.

The table below indicates the pages where the calibration method is described for each spreader.

	ZA-M	**ZA-M ProfiS**
Calibrate at standstill	Page 21	Page 21
Automatic during calibration travel		Page 23
Online calibration		Page 25
Calibration of slug pellets	Page 27	Page 27

- The fertiliser flow characteristics may change even after a brief fertiliser storage period.
  Therefore, before each use, determine again the fertiliser calibration factor of the fertiliser to be spread.
- Always determine the factor again if there are variations between the theoretical and the actual spread rate.
- The spread rate entered in the **AMATRON 3** must not exceed a maximum value (dependent on working width, proposed speed and entered calibration factor).

→ The maximum spread rate/ha has been reached when the slider is fully open.

Realistic calibration factors for fertiliser (0.7 to 1.4):

- 0.7 for urea
- 1.0 for calcium ammonium nitrate (CAN)
- 1.4 for fine, heavy PK fertilisers

4.4.1 Determining fertiliser calibration factor at standstill

1. Add a sufficient quantity of fertiliser to the hopper.
2. Remove the **left** spreading disc.
3. Fit collection bucket under the left outlet (refer to **ZA-M** operating manual).
4. Check/enter the working width.
5. Check/enter the spreading quantity.
6. Check/enter the intended speed.
7. Enter calibration factor for determining exact factor, e.g. 1.00.

   The calibration can be

   - the quantity factor in the settings chart
   - values based on experience.

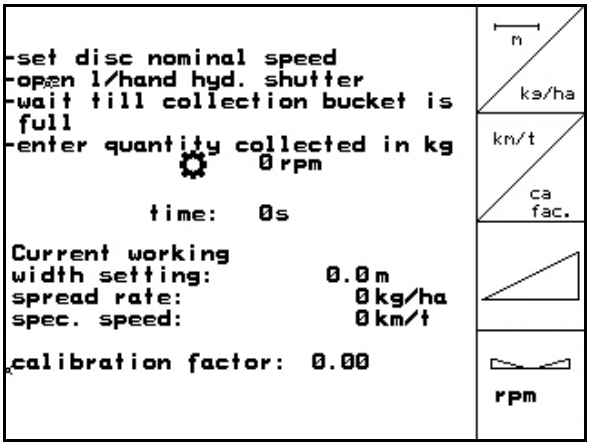

Fig. 17

> **WARNING**
>
> **Risk of injury from right rotating spreading disc**
>
> Keep people away from the discs.

8. Set the power take-off on the tractor as per the settings chart.

   ZA-M Hydro: switch on spreader discs.

9. Open the left slide gate.
   - Operate tractor controller 1.
   - **ZA-M Hydro/Comfort**:
10. Close the left slide gate as soon as the collection bucket is full.
    - Operate tractor controller 1.
    - **ZA-M Hydro/Comfort**:
11. Switch off spreading disc drive.
    - Switch off power take-off.
    - **ZA-M Hydro**: spreader discs switch off automatically.
12. Weigh the collected fertiliser (allow for the weight of the collection bucket).

The scales must weigh accurately. Inaccuracies may cause deviations in the actual dispensed quantity.

13. Enter amount of weighed fertiliser in kg.

→ The new calibration factor will be displayed (Fig. 18).

14. Confirm or reject calibration factor.

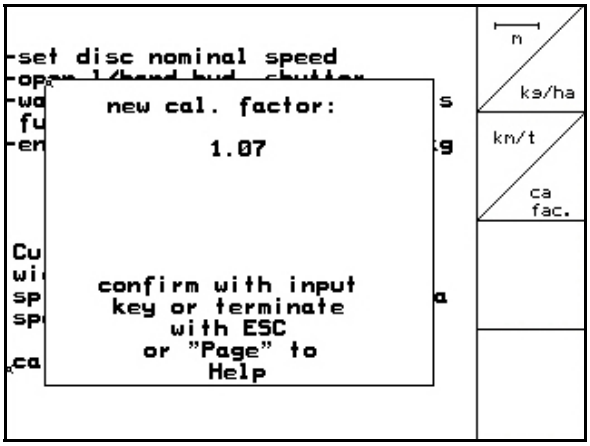

Fig. 18

Spreading rice:

Machine data menu: rice spreading on.

→ The realistic range for the calibration factor is increased from 0 to 2 because of the very different flow characteristics of rice.

4.4.2 Conduct fertiliser calibration run (offline calibration)

Only for **ZA-M Profis:**

Automatic fertiliser calibration occurs at the start of sowing during spreading, with a minimum 200 kg fertiliser being dispensed.

Machine data menu [Maschi.], **page three** [03/04]**:**

- [Turn method] Offline calibration mode.

Offline calibration mode activated:

Before automatic fertiliser calibration:

- [Cal.] Select the fertiliser calibration menu.

1. [r] Check/enter the working width.
2. [kg/ha] Check/enter the spreading quantity.
3. [km/t] Check/enter the intended speed.
4. [ca fac.] Enter calibration factor for determining exact factor, e.g. 1.00.

To enter the calibration factor:

- o take the calibration factor (quantity factor) from the settings chart.
- o values based on experience.
- o or make the calibration in advance with the machine at rest (page 21).

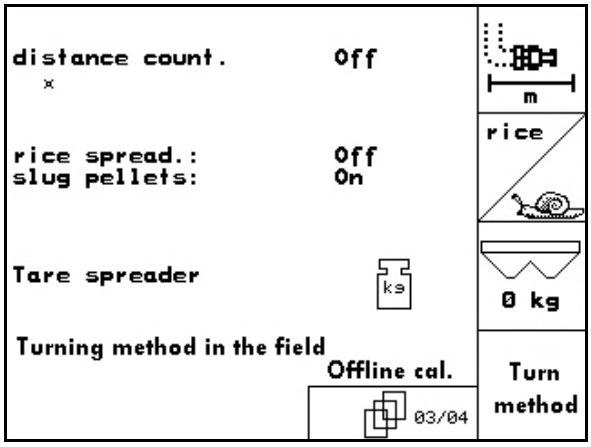

Fig. 19

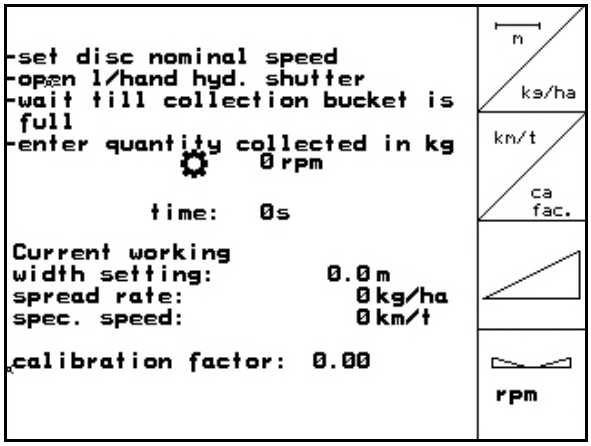

Fig. 20

- The tractor and spreader must be standing level at the start and end of the calibration process.
- The scales must be in their neutral position for the determination of the calibration factor to be started and ended.

→ If the symbol appears in the display, the spreader is not in its neutral position.

Determining fertiliser calibration factor automatically

1. Select the work menu.
2. Start automatic calibration.
3. Start spreading as usual and spread at least 200 kg of fertiliser.

→ The quantity of fertiliser dispensed is shown in the work menu (Fig. 21/1).

→ The work menu signals when 200 kg of fertiliser have been spread. (Fig. 21/2).

4. Once at least 200 kg of fertiliser has been dispensed, close the slide gates and come to a stop.
5. End automatic calibration.

→ The new calibration factor will be displayed (Fig. 22).

6. Confirm or reject calibration factor.

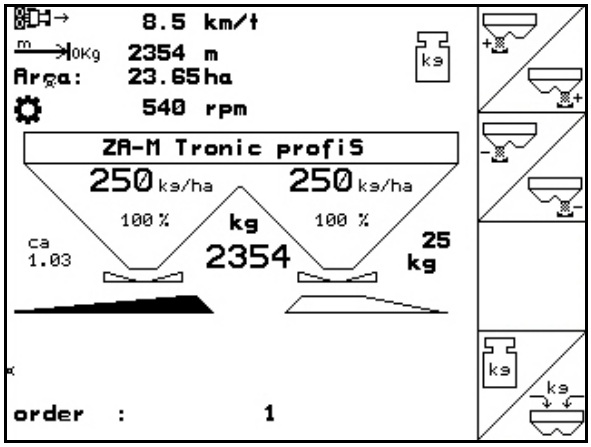

Fig. 21

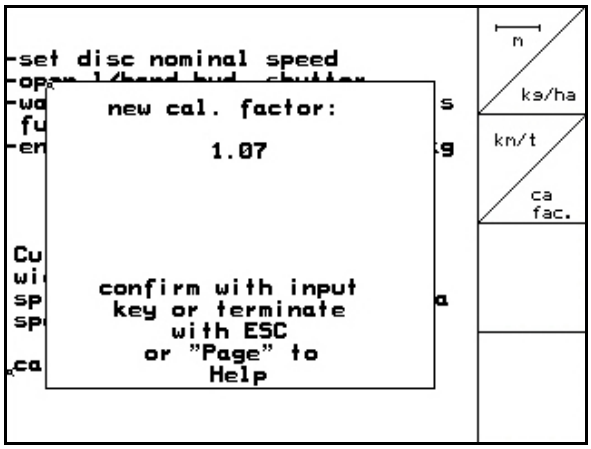

Fig. 22

Calibration travel can be carried out at any time while working in order to optimise the calibration factor.

- Fertiliser calibration by weighing is carried out during spreading operations where at least **200 kg** of fertiliser is to be dispensed.
- After the first fertiliser calibration, further calibrations should be carried out with greater spreading quantities (e.g. 1000 kg) in order to further optimise the calibration factor.

4.4.3 Calibrate permanent fertiliser (online calibration)

Only for **ZA-M Profis**:

The calibration value is recalculated continuously during online weighing, as is the dispensed quantity. The required slider position is matched online.

Machine data menu [mach.], **page three** [03/04]**:**

- [Turn method] Online calibration mode

Activate online calibration if a permanent calibration is to be made during spreading.

Online calibration mode active:

Before online fertiliser calibration:

- [Cal.] Select the fertiliser calibration menu.

1. [r] Check/enter the working width.
2. [kg/ha] Check/enter the spreading quantity.
3. [km/t] Check/enter the intended speed.
4. [ca fac.] Enter calibration factor for determining exact factor, e.g. 1.00.

To enter the calibration factor,

- o take the calibration factor (quantity factor) from the setting chart.
- o values based on experience can be used.

- [kg] **Start online calibration in the work menu (Fig. 25) when you start spreading.**

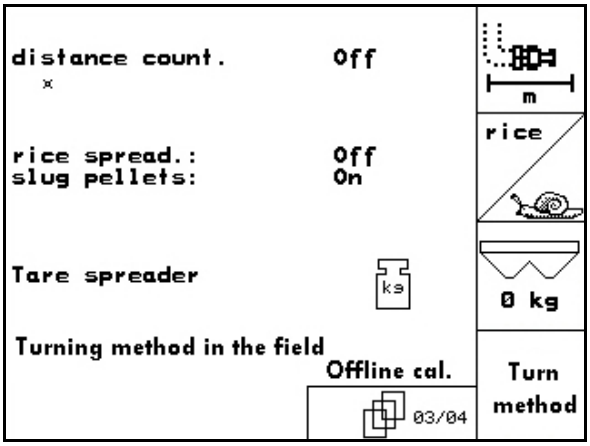

Fig. 23

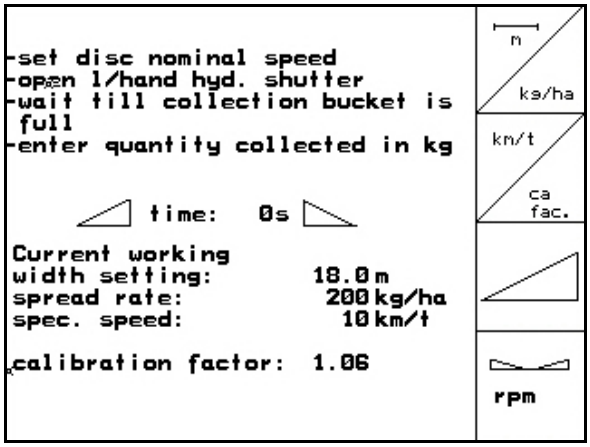

Fig. 24

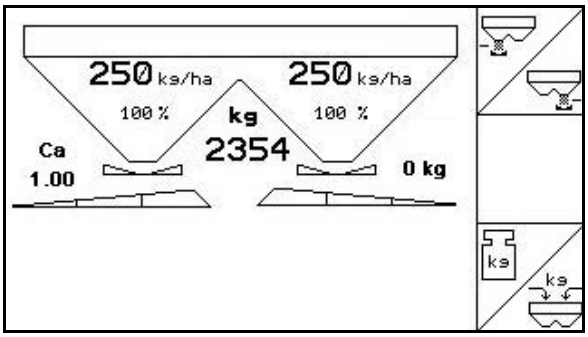

Fig. 25

Online calibration is only possible when the scales are not moving and there is more than 200 kg in the hopper.

If the symbol appears in the display, the spreader is not in its still.

During online calibration, the work menu displays:

(1) current calibration factor (Fig. 26/1).

(2) quantity dispensed since last online calibration, Online scales active.

(3) Calibration factor is steady

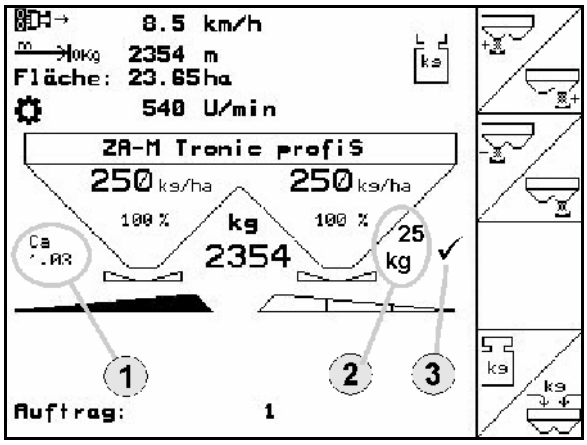

Fig. 26

When working in hilly areas or on uneven ground the system may introduce discrepancies in the determination of weight:

Here

Switch off online calibration while moving.

→ The display (Fig. 26/1, 2, 3) will go out.

→ Spreading will continue with the calibration factor displayed (Fig. 26/1).

During spreading, online calibration will switch off automatically if the hopper contents are less than 200 kg.

It will switch on again automatically after refilling (hopper contents more than 500 kg).

4.4.4 Calibration of slug pellets

CAUTION

Before spreading slug pellets, be sure to check the spreading quantity for both outlets in turn.

To spread slug pellets, go to Machine data menu Machine page 3 03/04:

1. Switch on slug pellets (Fig. 27).

- **Calibrate slug pellets for <u>left</u> outlet:**

2. Add a sufficient quantity of slug pellets to the hopper.
3. Remove both spreader discs.
4. Place collection bucket under the left outlet.
5. Select **Main menu** Sett. to go to the Calibrate slug pellets menu.
6. Check/enter the working width.
7. Check/enter the target quantity.
8. Check/enter the intended speed.
9. Take the required slider setting for the entered value from the settings chart.

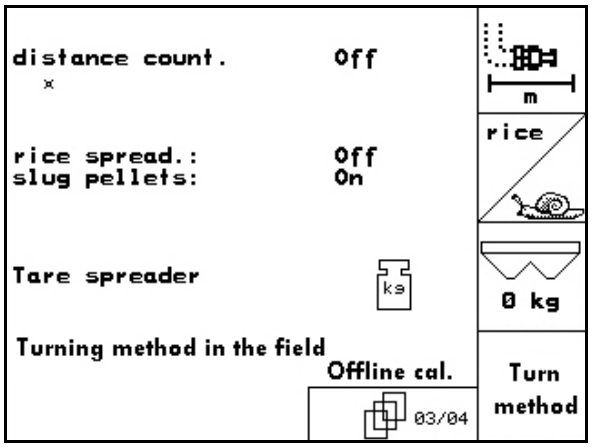

Fig. 27

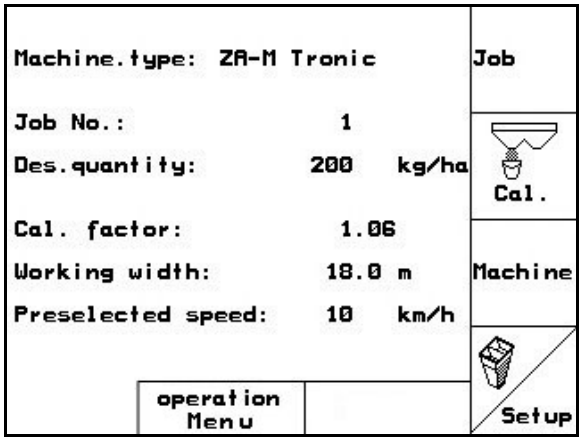

Fig. 28

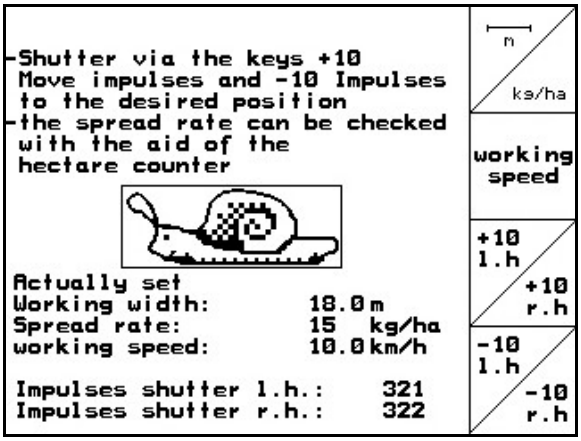

Fig. 29

10. , Press the key until the read-off edge (Fig. 30/1) of the left dosing slider shows the required slider position.

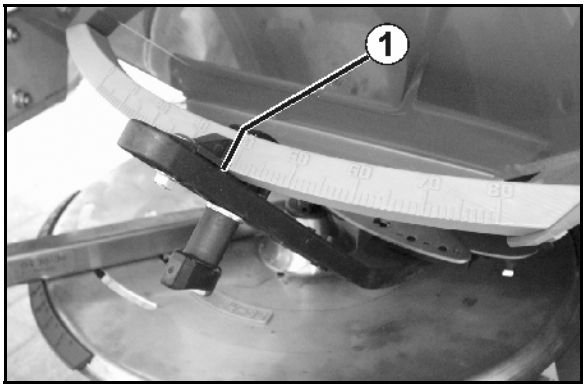

Fig. 30

11. Switch to the job menu via the main menu (Fig. 31).

12. Delete the day's date in the started job (Fig. 31).

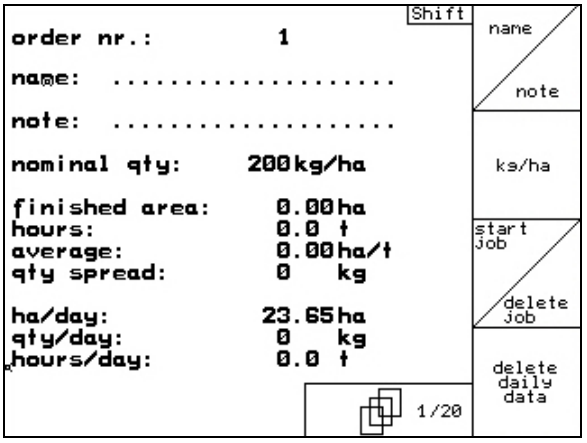

Fig. 31

13. Switch to the work menu (Fig. 32).

14. Switch on spreading disc drive.

- o Set the power take-off on the tractor as per the settings chart.
- o **ZA-M Hydro**

15. Open the left slide gate.

- o Operate controller.
- o **ZA-M Hydro/Comfort**: .

→ The theoretically spread area is displayed in the work menu.

16. If the display shows approx. 1 ha spread, close the left slide gate.

- o Operate controller.
- o **ZA-M Hydro/Comfort**: .

17. Switch off spreading disc drive.

18. Weigh the collected slug pellets (allow for the weight of the collection bucket).

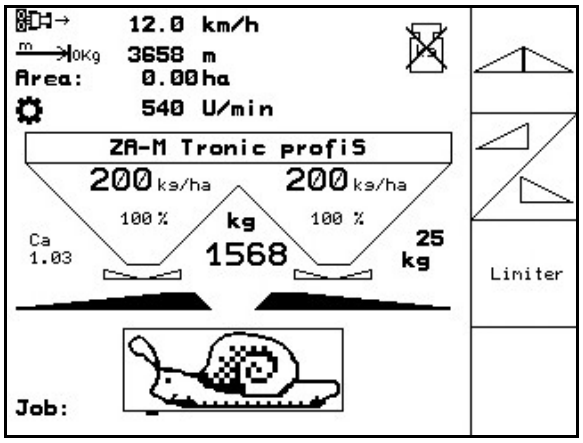

Fig. 32

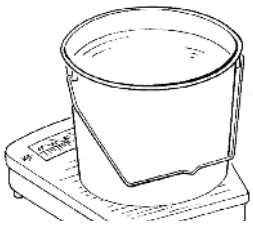

> The scales must weigh accurately. Inaccuracies may cause deviations in the actual dispensed quantity.

19.

Read off the theoretically dispensed quantity of pellets from the job and compare it with the weighed quantity.

20. If the calculated quantity for the job is

- **greater** than the weighed quantity

→

increase the spread rate.

- **less** than the weighed quantity

→

reduce the spread rate.

- **Calibrate slug pellets for <u>right</u> outlet:**

Calibrate the right side in the same way as for the left outlet.

> Maintain a steady speed when spreading slug pellets (as entered in the **AMATRON 3**), because the electric setting motors do not adjust to allow for speed when spreading pellets.

> The slug in the work menu indicated that **Slug pellets** is selected in the Machine data menu**.**

4.5 Service Setup

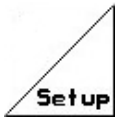

In the main menu, select **Setup** and confirm with

.

Page 1 (Fig. 33)

- Diagnosis computer input (only for customer service).
- Diagnosis computer output (only for customer service).
-

Enter simulated speed (allows continued spreading despite faulty distance sensor, see page 62).
-

Terminal setup (see page 33).
- Enter basic data (see page 31).

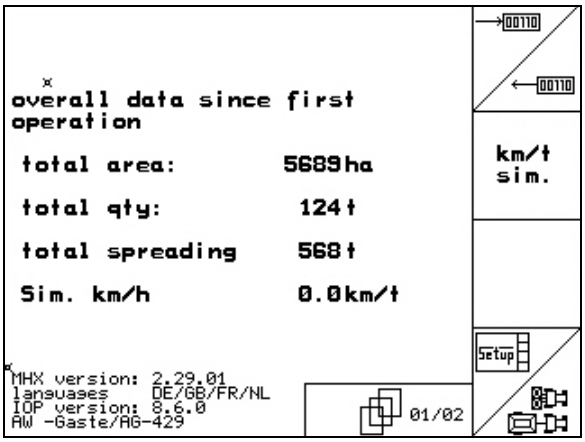

Fig. 33

Page 2 (Fig. 34)

-

Reset the machine computer to factory settings.

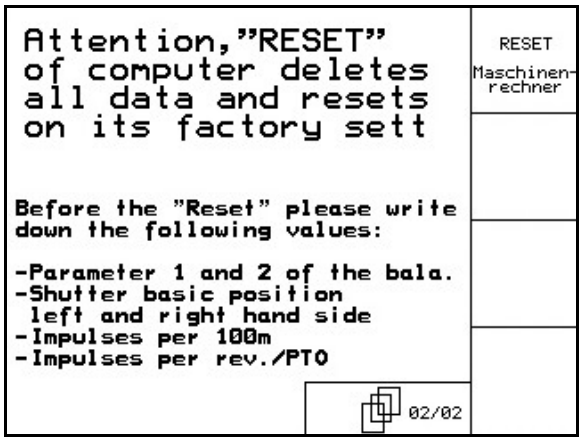

Fig. 34

> All entered and generated data (jobs, machine data, calibration values, set-up data) will be lost.

Note the following details beforehand:

- Parameter 1 and 2 for the scales
- Pulses for basic left and right slide setting
- Pulses per 100 m
- Pulses per revolution of the power take-off.

Page 1 Basic data (Fig. 35):

- Selecting machine type.
- Weighing cell present, on / off
- Calibrate weighing cell (page 32).
- **Limiter** present
  - Left
  - Right
  - Off

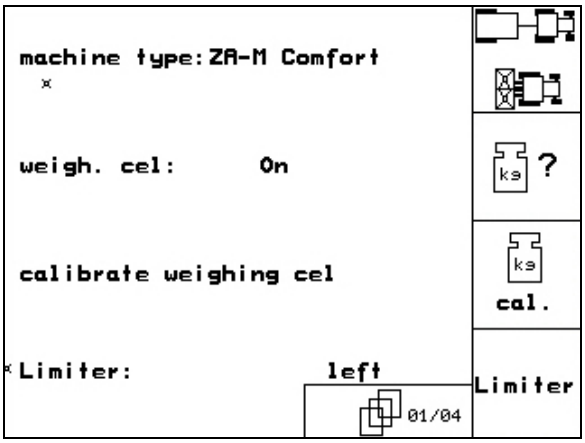

Fig. 35

Page 2 Basic data (Fig. 36):

- Basic setting for left slider (page 54).
- Basic setting for right slider (page 54).
- Tarpaulin fitted: on / off
- Hydraulic slide gate:
  - with spring (single acting)
  - no spring (double acting)
- Control factor (for customer service, **ZA-M Hydro** only).

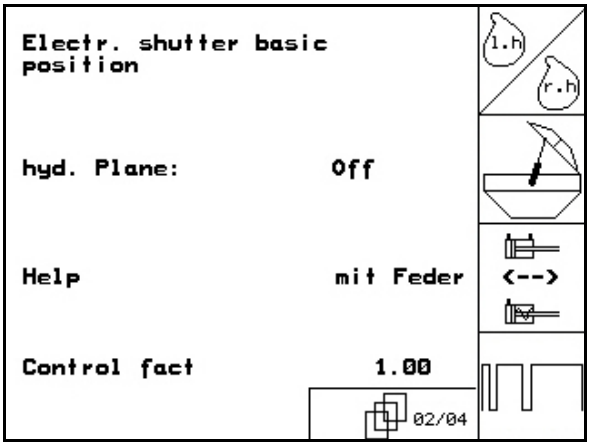

Fig. 36

4.5.1 Taring/calibrating weighing cell

The weighing cell is tared and calibrated at the factory. However, if there are differences between the actual and the spread quantity or the hopper contents, the weighing cell needs to be recalibrated.

See Service Set-up Setup, Basic data menu, page one.

> The weighing cell should be tared if special equipment is fitted

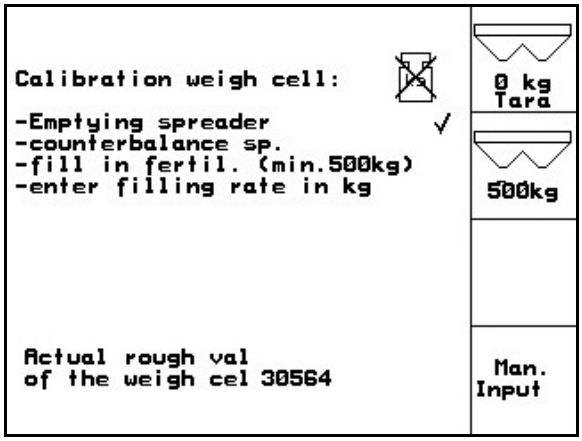

Fig. 37

1. Empty the fertiliser spreader completely (enter Machine data, page one, page 12), and wait until the symbol goes out.
2. 0 kg/ Tara Confirm.
3. Park the tractor and attached spreader on a horizontal surface and wait until the symbol goes out.

> **CAUTION**
>
> **If the symbol appears in the display, the tractor is still moving.**

4. 0 kg/ Tara Press → **The spreader is tared.**
5. Load a precisely weighed, minimum 500 kg of fertiliser and wait until the symbol goes out.
6. 500kg Confirm.
7. Enter the weighted amount of fertiliser in kg in the kg **AMATRON 3** → **The spreader is calibrated**.

> Check by comparing the display in the work menu with the quantity of fertiliser added.

4.6 Mobile test rig

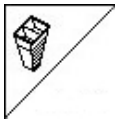

Select **mobile test rig** in the main menu.

Start mobile fertiliser test rig as explained in the mobile test rig operating manual and estimate the lateral distribution.

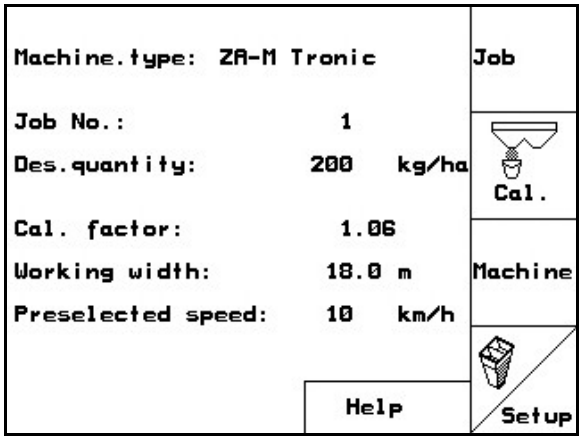

Fig. 38

1. Enter the number of scale lines for fertiliser level **I**.
2. Enter the number of scale lines for fertiliser level **II**.
3. Enter the number of scale lines for fertiliser level **III**.
4. Enter the number of scale lines for fertiliser level **IV**.
5. Correct the selected spreading vane positions and the calculated spreading vane adjustment positions.

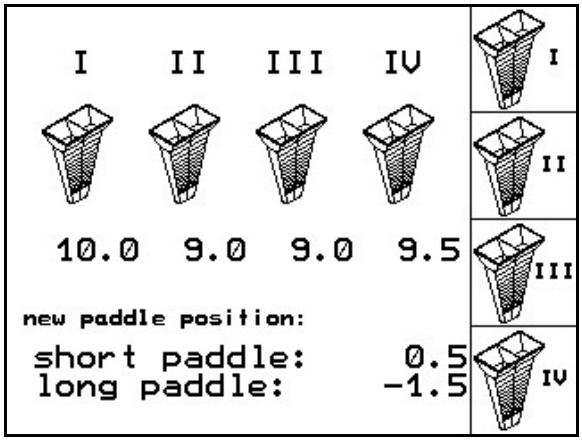

Fig. 39

Allocate the collected quantity of fertiliser in the 4 set positions (Fig. 40, I, II, III, IV) to function fields I to IV on the **AMATRON 3**.

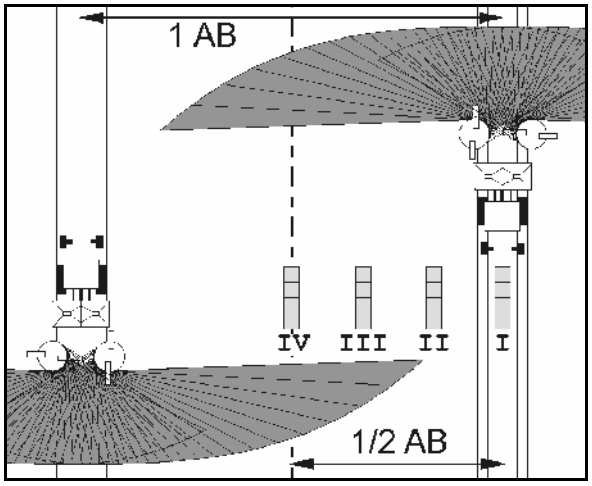

Fig. 40

5 Use on the field

CAUTION

During travel to the field and on public roads, the AMATRON 3 should always be switched off!

→ **Incorrect use leads to the risk of accidents!**

ZA-M Profis:

- Carry out an automatic fertiliser calibration when you start spreading.
- Tare the spreader before you use the **AMATRON 3** for the first time and after fitting any special equipment (see page 32).

Before the spreader can be used, the following information must be entered:

- Enter machine data (see page 12).
- Load and start job (see page 18).
- Calibrate fertiliser with unit at rest or enter calibration value manually (see page 20).

The quantity spread can be changed during spreading by pressing the key.

Each press of the key increases the spread amount by the rate increase (page 12) (e.g. +10%).

Set spread amount to 100% on both sides.

Each press of the key increases the spread amount by the rate increase (12) (e.g. -10%).

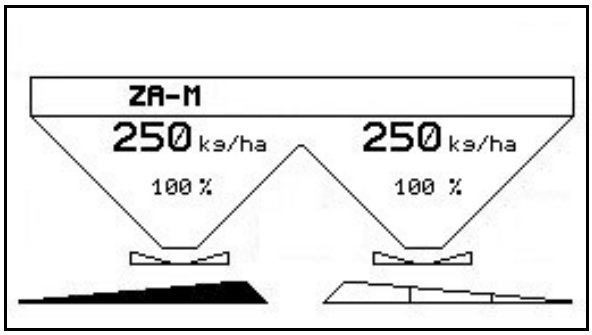

Fig. 41

The changed amount is indicated in the work menu in kg/ha and percent (Fig. 41)!

5.1 Work menu display

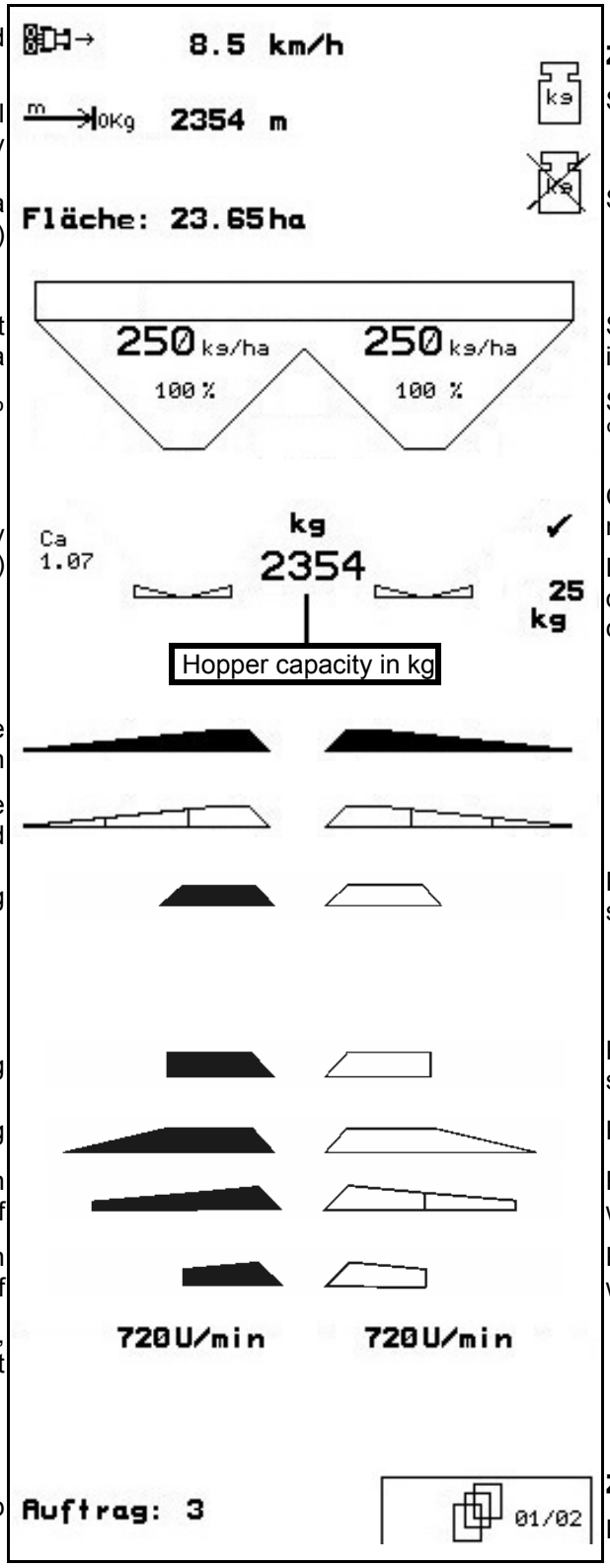

Speed

Remaining distance until hopper empty

Spread area (in job)

Spread amount left in kg/ha

Spread amount left in %

Calibration factor (only with online calibration)

Slide gate open

Slide gate closed

Boundary spreading

ZA-M Hydro only:

Trench spreading

Edge spreading

One boom part width section off

Two boom part width sections off

Spreader disc speed, left / right

Current job

ZA-M Profis only

Scales still

Scales not still

Spread amount right in kg/ha

Spread amount right in %

Calibration steady / minimum volume spread

Dispensed quantity during automatic calibration

Preselect boundary spreading

Preselect trench spreading

Preselect side spreading

Preselect one boom part width section off

Preselect two boom part width sections off

ZA-M Hydro only:

Page in work menu

5.2 Functions in work menu

5.2.1 Slide gate (ZA-M Comfort, Hydro only)

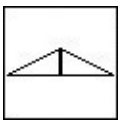

Both slide gates open/shut

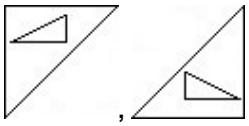

Slide gate left/right, open/shut

Open slide gates before use,

- and drive off
- once the spreader discs have reached the correct speed

Fig. 42/…

(1) Display Slide gate left open.

(2) Display Slide gate right closed.

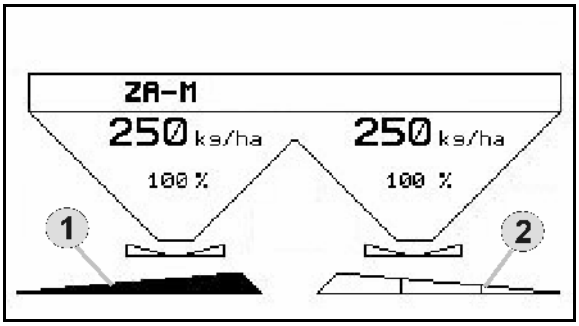

Fig. 42

5.2.2 Boundary spreading with limiter

Boundary spreading with limiter on/off (ZA-M Comfort only)

1.

Lower the limiter before boundary spreading.
2. Carry out boundary spreading.
3.

Raise the limiter after boundary spreading.

Before use, set the lowered limiter according to the settings chart, then raise it again

Fig. 43/…

(1) Display Limiter lowered during boundary spreading

→ Limiter sensor must be fitted.

(2) Display. Limiter lowered with sliders closed.

→ Limiter sensor must be fitted.

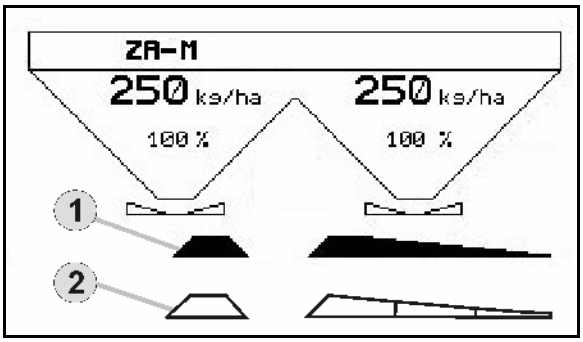

Fig. 43

5.2.3 Changing spread quantity left/right

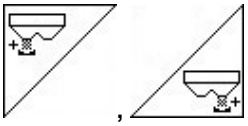

Increase spread quantity left, right.

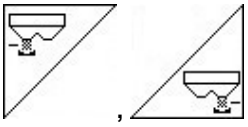

Reduce spread quantity left, right.

- Each press of the key changes the spread amount by the rate increase (e.g. 10%).
- Enter the rate increase in the Machine data menu

Fig. 44/…

(1) Display Changed spread quantity in kg/ha and percent.

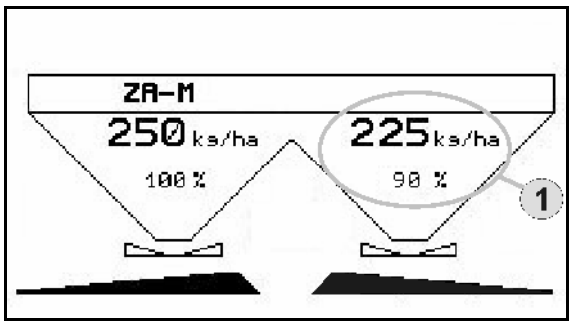

Fig. 44

5.2.4 Tarpaulin (ZA-M Comfort, Hydro only)

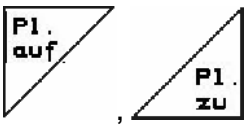

Open/close tarpaulin

Press key until tarpaulin is fully opened or closed.

5.2.5 Calibrating fertiliser (ZA-M Profis only)

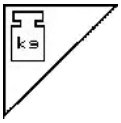

Automatic fertiliser calibration for **weighing spreader**, see page 23.

Fig. 45/…

(1) Display Fertiliser spreader during calibration travel.

Calibrate fertiliser

- o at start of spreading or
- o calibrate fertiliser online.

(2) Display Scales moving.

(3) Display Dispensed quantity of fertiliser in kg during calibration.

(4) Online calibration:

Symbol appears when the calibration factor is steady.

Offline calibration:

Symbol appears when 200 kg have been spread during offline calibration. It signals that the calibration run can be terminated.

(5) Display of current calibration factor

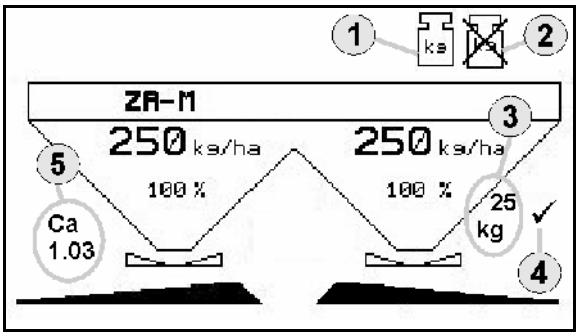

Fig. 45

5.2.6 Filling with fertiliser

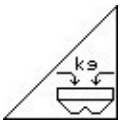

Filling with fertiliser see page 50.

5.2.7 Switching spreading disc drive on and off (ZA-M Hydro only)

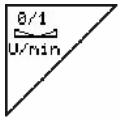

Spreader discs on/of.

To switch on, press the key for at least three seconds until the tone stops.

The spreader discs operate at the speed entered in the Machine data menu

Fig. 45/…

(1) Display Spreader disc speed

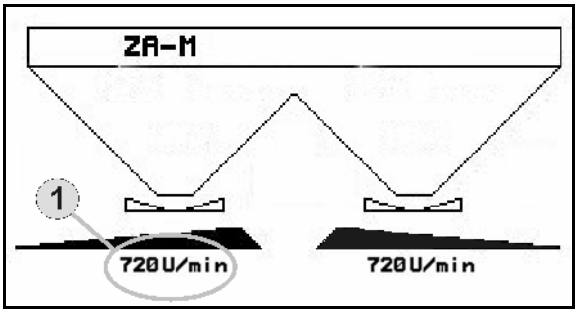

Fig. 46

WARNING

Risk of injury from the rotating discs.

Keep people away from the discs.

5.2.8 Boom part width sections (ZA-M Hydro only)

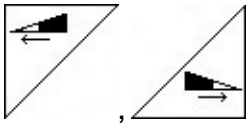

Switch on boom part width sections left, right (3 steps)

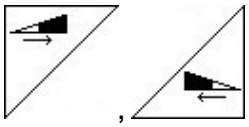

Switch off boom part width sections left, right (3 steps)

Fig. 47/…

(1) Display Two right-hand boom part width sections switched off.

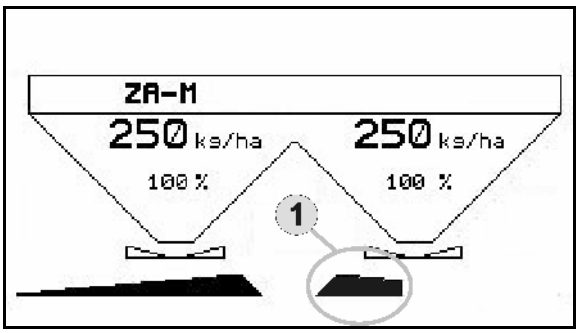

Fig. 47

The boom width can be reduced when the discs are closed.

5.2.9 Boundary spreading (ZA-M Hydro only)

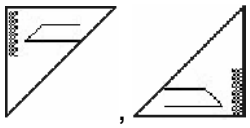

Switch on/off trench spreading left/right.

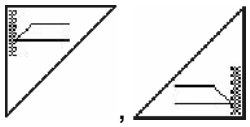

Switch on/off boundary spreading left/right.

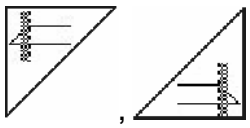

Switch on/off side spreading left/right.

Boundary spreading can also be carried out on both sides.

→ Switch on boundary spreading left and right.

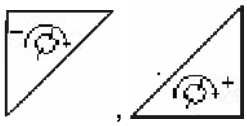

Reduce/increase spreader disc speed for selected type of spreading.

- The boundary spreading speed is increased or reduced by 10 rpm each time the key is pressed.
- The changed speed is stored for later boundary spreading.

- Boundary spreading can be selected once the discs have stopped.
- If the discs are turning, their speed is reduced to the boundary setting.
- The boundary spreading speed is stored in the Machine data menu for the particular boundary spreading type.
- A reduced quantity is entered in the Machine data menu for boundary and trench spreading.

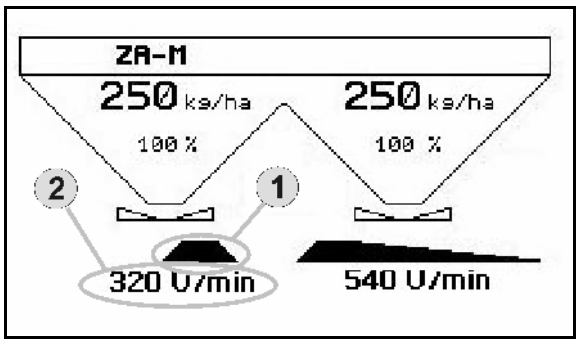

Fig. 48

Fig. 48/…

(1) Display Boundary spreading on.

(2) Display Reduced spreader disc speed

Boundary spreading can be selected when the discs are closed.

5.3 ZA-M Tronic

5.3.1 Procedure for use

1. Switch on the **AMATRON 3**.
2. Select the work menu.
3. Set the power take-off speed (see setting chart).
4. Drive off and open both slide gates using tractor controllers 1 and 2.
5. In the case of the weighing spreader
   - o start with a calibration travel

   Or:
   - o carry our online calibration (switch on in Machine data menu).
6. During spreading, the **AMATRON 3** shows the work menu. All the settings required for spreading should be made here.
7. These data are stored for the started job.

After use:

1. Close both slide gates using tractor controls 1 and 2.
2. Switch off power take-off.
3. Switch off the **AMATRON 3**.

5.3.2 Work menu key layout

Page 1: **Description of the function fields**

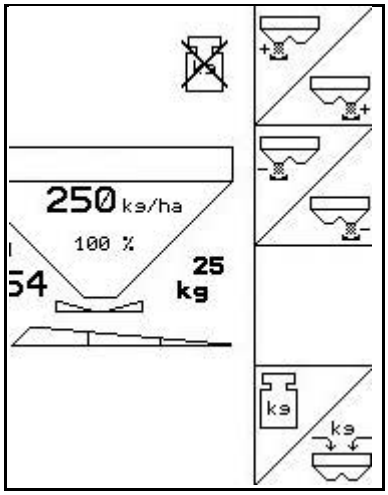

See section	
5.2.3	Increase spread quantity left, right
5.2.3	Reduce spread quantity left, right.
5.2.5	Automatic fertiliser calibration
5.2.6	Filling with fertiliser

Layout for multifunction stick

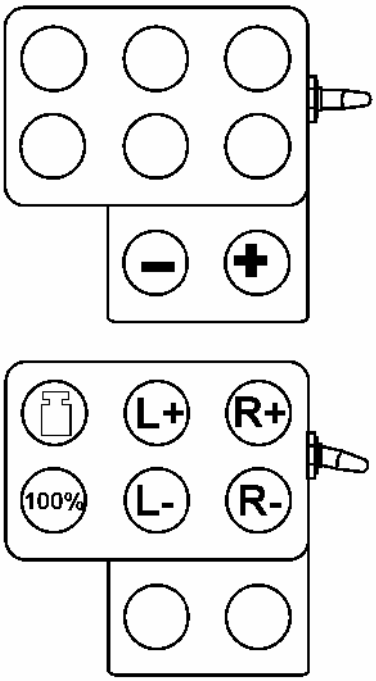

5.4 ZA-M Comfort

5.4.1 Procedure for use

1. Use tractor control 1 to supply the control block with hydraulic fluid.
2. Switch on the **AMATRON 3**.
3. Select the work menu.
4. Set the power take-off speed (see setting chart).
5. Move off and open both slide gates
6. In the case of the weighing spreader
   - o start with a calibration travel

   Or:
   - o carry our online calibration (switch on in Machine data menu).
7. Once boundary spreading has started:

   Liniter switch on **Limiter**

→ During spreading, the **AMATRON 3** shows the work menu. All the settings required for spreading should be made here.

→ The data determined are stored for the started job.

After use:

1. Close both slide gates.
2. Switch off power take-off.
3. Use tractor controller 1 to stop the hydraulic fluid supply to the control block.
4. Switch off **AMATRON 3**.

5.4.2 Work menu key layout

Page 1: **Description of the function fields**

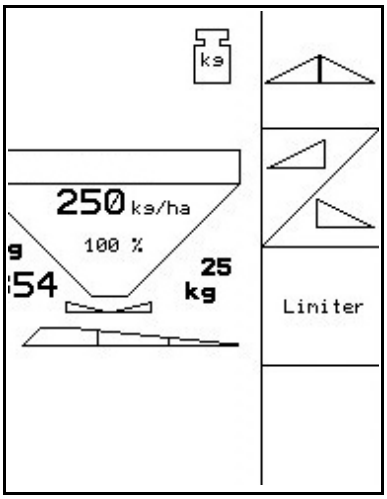

See section	
5.2.1	Both slide gates open/shut.
5.2.1	Slide gate left/right, open/shut.
5.2.2	Boundary spreading with limiter on/off

Shift key pressed: **Description of the function fields**

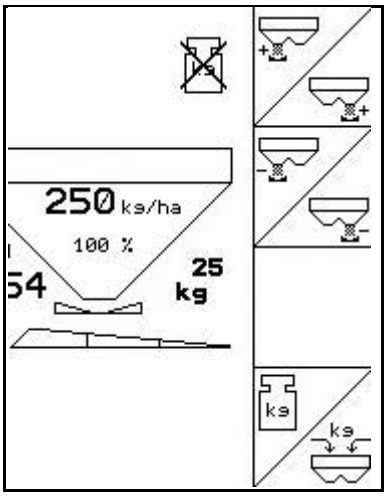

See section	
5.2.3	Increase spread quantity left, right.
5.2.3	Reduce spread quantity left, right.
5.2.5	Automatic fertiliser calibration
5.2.6	Filling with fertiliser

Layout for multifunction stick

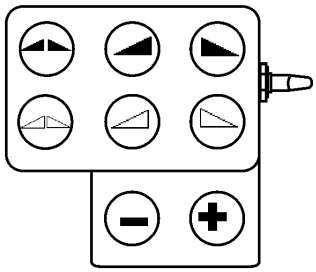

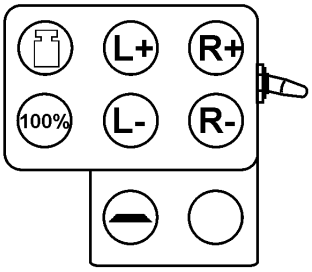

5.5 ZA-M Hydro

5.5.1 Procedure for use

1. Use tractor control 1 to supply the control block with hydraulic fluid.
2. Switch on the **AMATRON 3**.
3. Select the work menu.
4. Switch on spreader discs.
5 Move off and open the slide gates
6. In the case of the weighing spreader
   - o start with a calibration travel

   Or:
   - o carry our online calibration (switch on in Machine data menu).
7. If starting with boundary, trench or side spreading:

   , Select type of boundary spreading and edge of the field (left / right), and switch on.

→ During spreading, the AMATRON 3 shows the work menu. All the settings required for spreading should be made here.

→ The data determined are stored for the started job.

After use:

1. Close the slide gates.
2. Switch off spreader discs.
3. Use tractor controller 1 to stop the hydraulic fluid supply to the control block.
4. Switch off the **AMATRON 3**.

5.5.2 Work menu key layout

Page 1: **Description of the function fields**

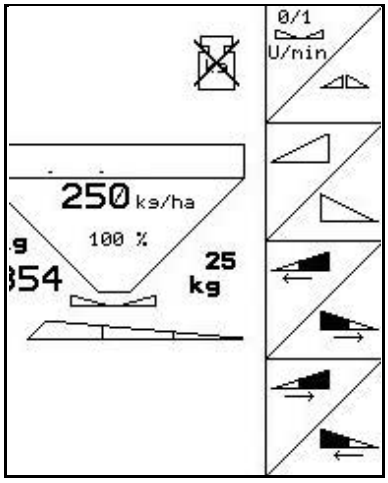

See section	
5.2.7	Spreader discs on/of.
5.2.1	Both slide gates open/shut
5.2.1	Slide gate left/right, open/shut
5.2.8	Switch on boom part width sections left, right.
5.2.8	Switch off boom part width sections left, right

Shift key pressed: **Description of the function fields**

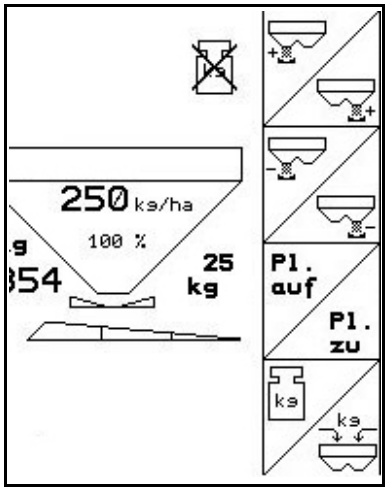

See section	
5.2.3	Increase spread quantity left, right
5.2.3	Reduce spread quantity left, right
5.2.4	Open/close tarpaulin
5.2.5	Automatic fertiliser calibration
5.2.6	Filling with fertiliser

Page 2: **Description of the function fields**

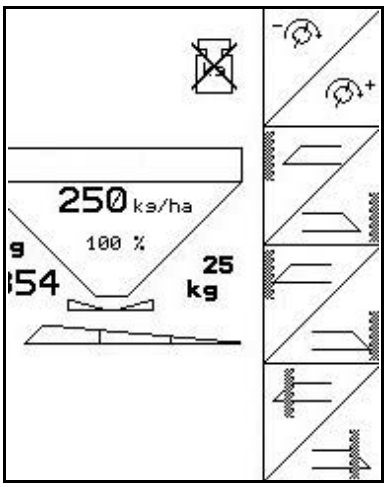

See section	
5.2.9	Reduce/increase spreader disc speed
5.2.9	Switch on/off trench spreading left/right
5.2.9	Switch on/off boundary spreading left/right
5.2.9	Switch on/off side spreading left/right

Layout for multifunction stick

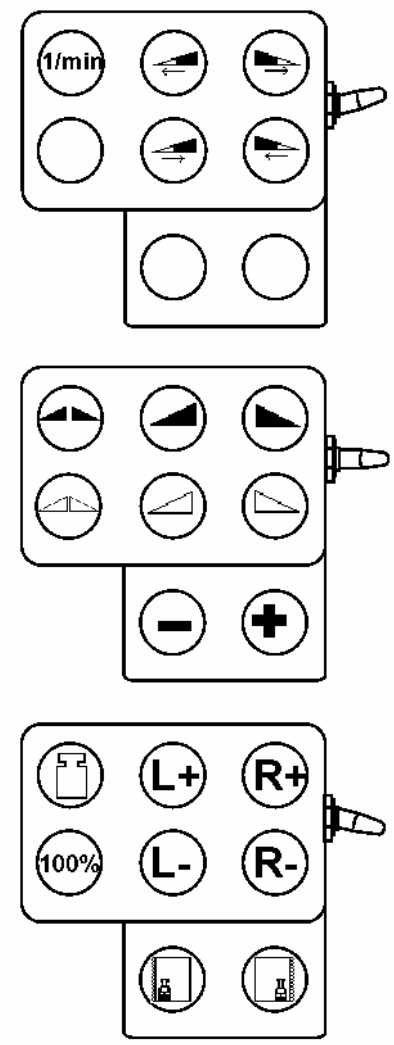

5.6 Filling with fertiliser

- In the work menu (Fig. 49).
- In Machine data menu page one (Fig. 50).

1. Open the fill menu.
2. Fill with fertiliser.

Fertiliser spreader without weighing cell:

→ Enter amount of fertiliser in kg.

Fertiliser spreader with weighing cell

→ Added quantity of fertiliser is displayed in kg.

Confirm quantity (Fig. 50).

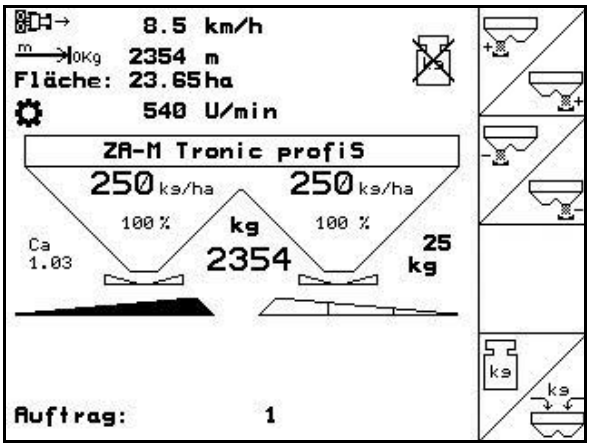

Fig. 49

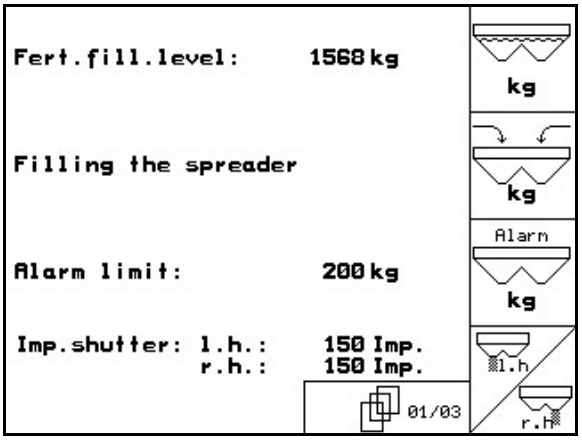

Fig. 50

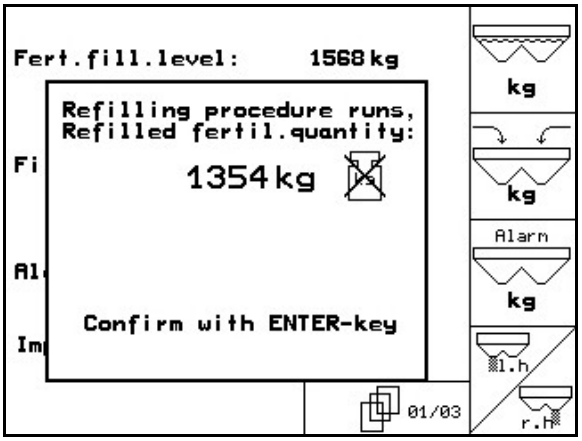

Fig. 51

5.7 Emptying fertiliser hopper

The remaining fertiliser in the hopper can be emptied via the hopper tips.

1. Remove the spreader discs (see machine operating manual)
2. Machine data menu:

   , Open both dosing sliders.
3. Open both slide gates.
   - o Operate tractor controllers 1 and 2.
   - o **ZA-M Hydro, Comfort**:

→ Remaining fertiliser runs out.

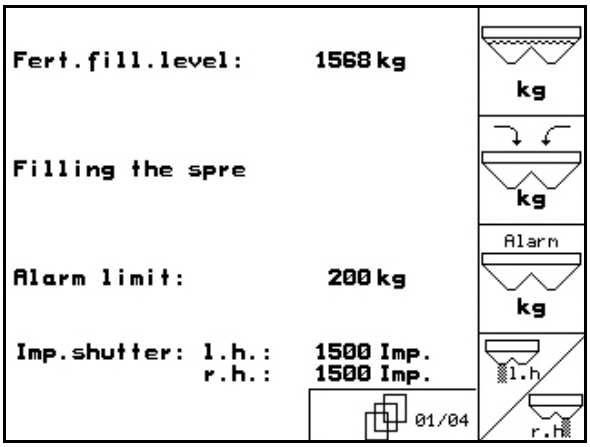

Fig. 52

- Stow the machine with the sliders opened.
- Close the sliders before refilling.

WARNING

Risk of injury near the rotating agitators and spreading disc drive.

Make sure the agitators and disc drive are s witched off when emptying the residue.

6 Multifunction stick

6.1 Installation

The multifunction stick (Fig. 53/1) is attached with 4 screws at a convenient location in the tractor cab.

To connect, insert the connector of the basic equipment into the 9-pin Sub-D-bushing of the multifunction stick (Fig. 53/2).

Insert the connector (Fig. 53/3) from the multifunction stick into the centre sub-D socket on the **AMATRON 3**.

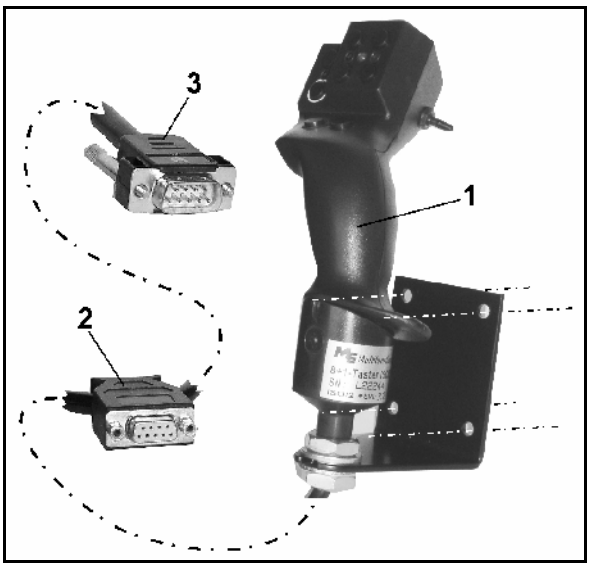

Fig. 53

6.2 Function

The multifunction stick functions are only found in the **AMATRON 3** work menu. It allows blind operation of the **AMATRON 3** in use on the field.

To operate the **AMATRON 3**, the multifunction stick (Fig. 54) has 8 buttons (1 - 8). In addition, the assignment of the keys can be changed 3-fold by means of a switch (Fig. 55/2).

The switch default position is

- central position (Fig. 55/A) and can be pressed
- up (Fig. 55/B) or
- down (Fig. 55/C).

The position of the switch is indicated by an LED (Fig. 55/1).

- LED yellow
- LED red
- LED green

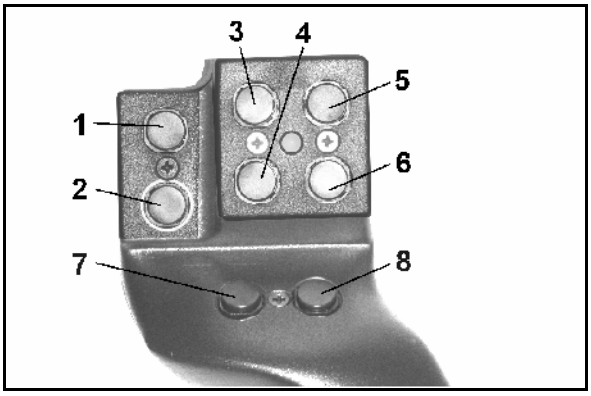

Fig. 54

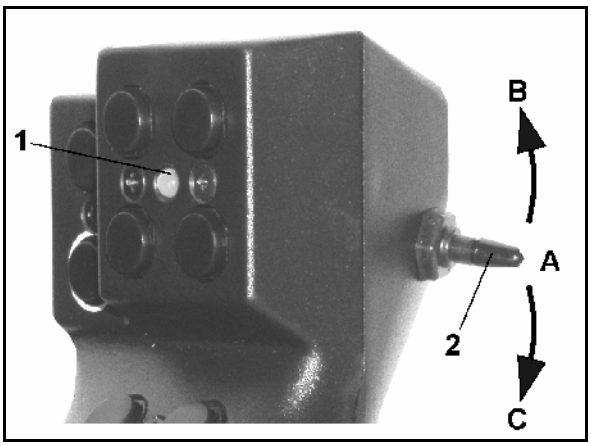

Fig. 55

6.3 Key layout:

Key	ZA-M Tronic	ZA-M Comfort	ZA-M Hydro
1			Spreading disc drive on/off
2			
3			Switch on boom part width sections left
4			Switch off boom part width sections left
5			Switch on boom part width sections right
6			Switch off boom part width sections right
7			
8			
1		Both slide gates open	
2		Both slide gates closed	
3		Left slide gate open	
4		Left slide gate closed	
5		Right slide gate open	
6		Right slide gate closed	
7	- Quantity step [%]		
8	+ Quantity step [%]		
1	Start calibration (only with weighing cell).		
2	Quantity 100%		
3	Left + application rate [%]		
4	Left - application rate [%]		
5	Right + application rate [%]		
6	Right - application rate [%]		
7		**Limiter** on/off	Boundary spreading left
8			Boundary spreading right

7 Maintenance and cleaning

WARNING

Perform maintenance and cleaning only with the spreader discs and agitator shaft drive switched off.

7.1 Cleaning

DANGER

Do not reach into the outlet opening while operating the sliders! Risk of crushing!

To clean the fertiliser spreader, you must have the slide gates and the electric dosing sliders open so the water and residual fertiliser can drain.

- Opening/closing dosing sliders (see Machine data menu, page 12).
- Opening/closing slide gates (see **ZA-M Hydro / ZA-M Comfort** work menu).

7.2 Basic slide setting

The amount of cross-sectional clearance of the electric dosing sliders is set at the factory (Fig. 56).

If, despite identical slider positions, you find that the two hopper tips are not emptying uniformly, check the basic setting of the sliders.

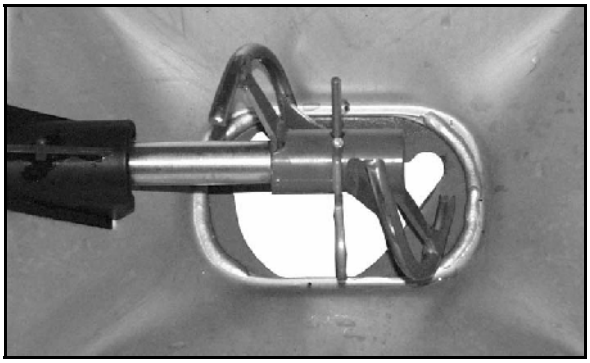

Fig. 56

Specify the basic setting for both rate slides using the Set-up menu:

1. Select basic data.

Page two (Fig. 57)

2. Set left slider position.
3. Set right slider position.

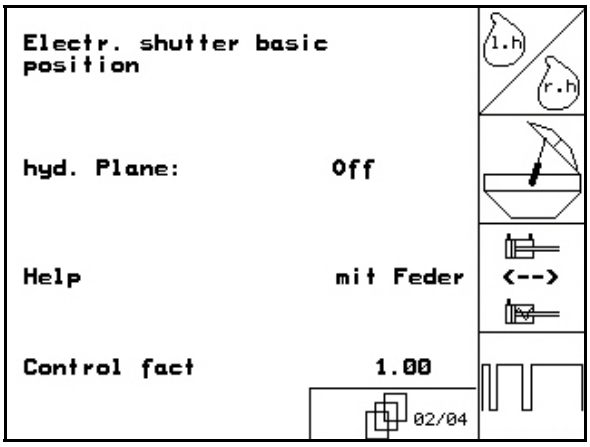

Fig. 57

4. to 0 Close the outlet fully (0 pulses).

5. to 1500 Open the outlet to 1500 pulses.

> **DANGER**
>
> **Risk of injury near dosing sliders when key pressed, to 1500, to 0, +5, -5 because the sliders close before the selected setting is applied.**
>
> **Keep fingers and gauges away from the opening.**

6. Insert the setting gauge (Fig. 59/1) (Option, order no.: 915018) slightly into the opening.

   - The gauge **cannot** be inserted through the opening:

     +5 Increase the current offset by 5 pulses until the gauge fits exactly in the opening (Fig. 60).

   - Too much gauge clearance:

     -5 Reduce the current offset by 5 pulses until the gauge fits exactly in the opening (Fig. 60).

7. Confirm the position with the input key.

Impulse Display 1/0 The setting motor pulses (Fig. 61/1) can be displayed in the work menu.

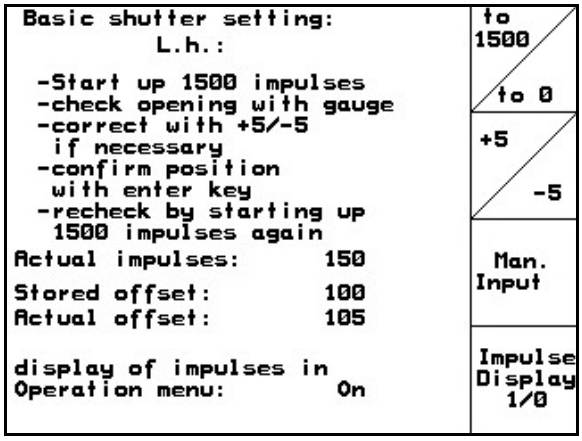

Fig. 58

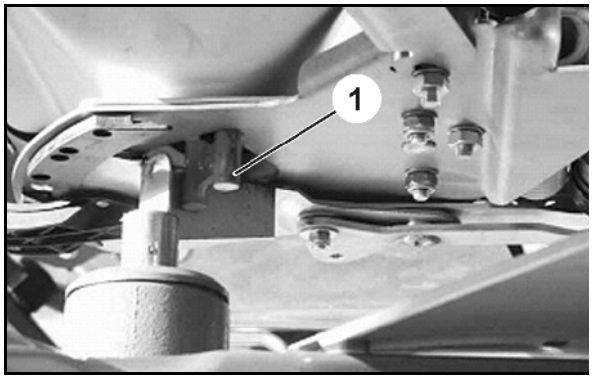

Fig. 59

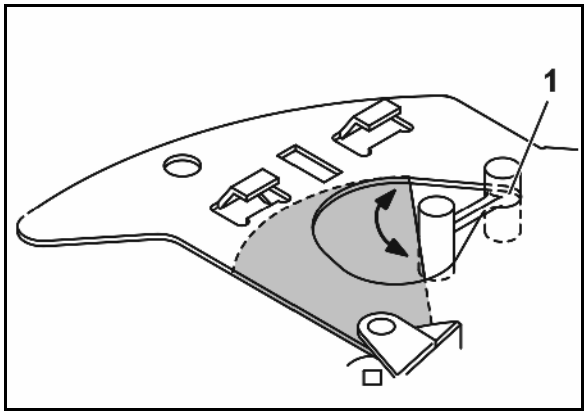

Fig. 60

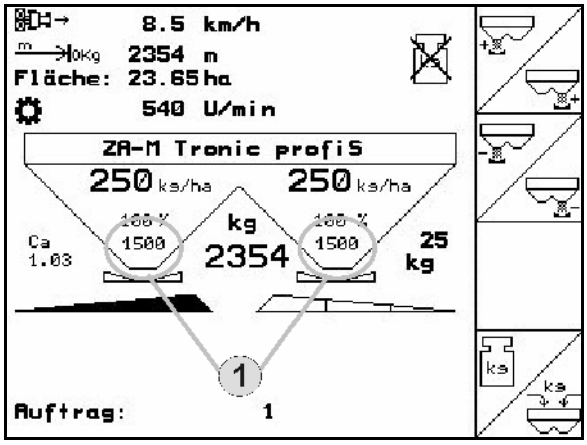

Fig. 61

8 Malfunction

8.1 Alarm

Uncritical alarm:

A fault message (Fig. 62) appears at the bottom of the display and an acoustic alarm sounds three times. Rectify the fault if possible.

Example:

- Fault message: spreader disc speed too low.

→ Remedy: increase speed of power take-off

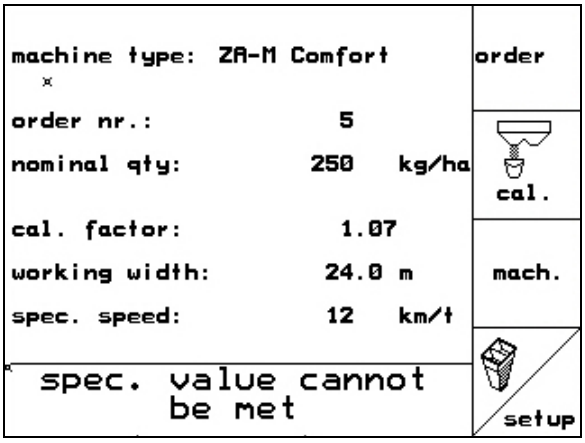

Fig. 62

Critical alarm:

A warning message (Fig. 63) appears in the middle of the display and an acoustic alarm is given.

1. Read the warning message on the display.
2. Confirm the warning message.

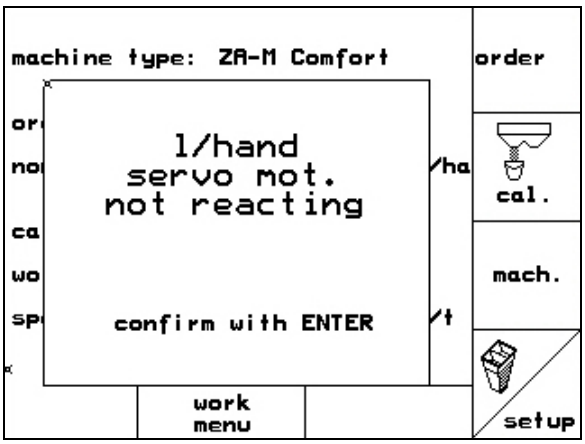

Fig. 63

8.2 Error messages and remedies

Error messages		Cause / description of fault	Fault remedy
1	Setpoint value cannot be maintained	Application rate cannot be maintained with the set parameters at current ground travel speed.	• Reduce ground travel speed • Reduce setpoint value
2		Input of setpoint in "kg/ha" missing.	• Enter setpoint
3	Working width missing	Input of the working width in "m" missing.	• Enter working width
4	Setting motor left does not respond	The left setting motor does not move when activated	• Replace setting motor • Carry out diagnostics on setting motor
5	Setting motor right does not respond	The right setting motor does not move when activated	• Replace setting motor • Carry out diagnostics on setting motor
6	PTO speed de-viation	The PTO speed is outside the set limits for the stored setpoint.	• Adjust PTO speed
7	Filling level too low	Filling level in hopper is below filling level set for alarm limit.	• Replenish spreader • Adjust filling level alarm limit
8	Spreader disc speed too low	Speed of spreader discs is below set rated speed.	• Adjust spreader disc speed
9	Dosing chamber filling level too low	Filling level in dosing chamber of ZG-B PreciS / Ultra Hydro too low.	• Check fertiliser filling level in hopper • Check sensors in input diagnosis
10	Dosing chamber filling level too high	Filling level in dosing chamber of ZG-B PreciS / Ultra Hydro too high.	• Was fertiliser spread on one side? If so, this may result in "piling" in the dosing chamber. • Check sensors in input diagnosis
11	Value on scales fluctuates	Scales do not supply a steady signal	• Wait until scales are steady again (display goes out)
12	Please press "Shift" and "Scroll"	The key "Call up terminal setup" was pressed.	• Press key combination indicated
13	Centre position not reached	Centre position sensor of Trail Tron (drawbar) transmits no signal, although the on-board computer expects a signal.	• This is a safety check for the centre position sensor. • Move drawbar to centre position.
14	Min. kg have not yet been spread! Abort calibrati-on?	During "Calibration in the field", minimum quantity has not yet been spread, but key "Terminate calibration" was pressed.	• Press key "ESC" • Start "Calibration of the move" again and wait until the "tick" appears before finishing.
15	Hopper filling level too low, minimum hopper content 500 kg	Key "Start calibration" / "Start online calibration" was pressed, but filling level is still below the specified value.	• Replenish spreader

16		Error in calibration of scales (parameter 2 below 1.0), please repeat	After the scale calibration process, a parameter 2 of less than 1.0 was detected. This is not admissible.	• Repeat calibration of the scales
17		Pulses per 100 m missing	Value of pulses per 100 m is missing, so that ground travel speed cannot be calculated.	• Enter pulses per 100 m • Run in pulses per 100 m
18		Setpoint deviates significantly from setpoint during calibration.	The new setpoint entered is significantly higher / lower than the setpoint used for the last turning. This can lead to problems with the actual volume applied.	• Carry out calibration at standstill
19		Calibration not possible, left-hand shutter open	Key "Call up calibration menu" was pressed although the left-hand closing shutter is open. Calibration is only admissible when the left-hand shutter is closed, as this is used as "starting shutter".	• Close hydraulic closing shutter in work menu
20		Calibration not possible, PTO speed cannot be maintained	The PTO speed is outside the set limits for the stored setpoint (during the calibration process).	• Adjust PTO speed
21		Calibration not possible, disc speed cannot be maintained	Speed of spreader discs is below set rated speed (during the calibration process).	• Adjust spreader disc speed
22		Scales failed	The scale electronics transmit no values to the on-board computer	• Option "scales" installed? • Check scales in input diagnosis • Check connection to scales visually
23		This value lies outside the set limits, accept anyway?	An entered value is higher / lower than its admissible value.	
24		Calibration on the move not possible.	Key "Call up calibration menu" was pressed while a ground travel speed was detected. Calibration is this menu is only admissible at standstill.	• Stop
25		Oil level too low, hydraulic function not possible. CAUTION! E-lectric shutters closed.	A hydraulic function was activated (e.g. close left-hand closing shutter), but there is no reaction (e.g. change in a sensor signal).	• Switch on oil circulation • Check oil supply to the hydraulic functions • Check activation of the corresponding valves (output diagnosis) • CAUTION! Switch off hydraulic controller! CAUTION! After appearance of the fault, the "Enter" key must be pressed 2x in the work menu to reset the setpoint to 100%.

26	Calibration not possible due to setpoint, please check calibration factor and intended ground travel speed.	Position of dosing shutter calculated from values "Setpoint / calibration factor / intended ground travel speed / working width" cannot be reached.	• Check / modify parameters
27	Calibration not possible, sensor "Hopper empty" not damped.	Key "Start calibration" was pressed and sensor "Hopper empty" transmits no signal. Calibration is only admissible when the filling level in the hopper of the ZG-B has a given value.	• Press key "Predosing" • Check sensor
28	You are changing the basic setting of the scales	Key "Calibrate scales" was pressed.	
29	Bulk density missing.	Input of bulk density of fertiliser in "kg/l" is missing.	• Enter bulk density
30	Hopper filling level too low, minimum hopper content 200 k g	Filling level is lower than the min. filling level for driving with online scales	• Replenish spreader
31	Online calibration factor 5x outside realistic values	A calibration factor less than 0.7 or larger than 1.4 from the online scales was calculated 5x in succession.	• Check discharge opening for clogging
32	Articulated drawbar only possible in working position for safety reasons	Key "Trail Tron Hand/Auto" was pressed (in Hand mode), but the machine is not in working position.	• Move machine to working position
33	Centre position not recognised. Moving of drawbar to centre position possible.	Key "Trail Tron Hand/Auto" was pressed (in Hand mode), working position was detected, but centre position sensor was not detected. The centre position sensor must be detected when the Trail Tron is switched on in order to be sure that it is functioning.	• Move to centre position
34	You are travelling faster than 1 km/h, drawbar locked	The working position was not detected, a speed of more than 1 km/h is detected. In this case the Trail Tron must not operate and "drops" back into Hand mode (after reaching the centre position sensor)	
35	Spreader discs not rotating	The hydraulic spreader discs are activated, but there is no indication that they are rotating (sensor transmits no pulses)	• Check oil supply to the spreader discs • Check activation of the corresponding valves (diagnosis). CAUTION! Switch off oil supply • Check settings of the speed sensors (input diagnosis)

36	Cleaning hood sensor failed	Sensor on cleaning hood of ZG-B Ultra Hydro transmits no signal.	• Check sensor (input diagnosis) • Replace sensor
37	Cleaning hood open	The system has detected that the cleaning hood is open. This condition is not admissible in working position.	• Close cleaning hood
38	Spreader disc control machine computer failed	Machine computer of the spreader disc control of the ZG-B Ultra hydro transmits no signals	• Check connection between base machine computer and spreader disc control machine computer visually • Check set machine type • Replace spreader disc control machine computer
39	Do you want to delete this order?	Key "Delete order" was pressed.	
40	CAUTION! You are changing the basic setting of the machine	The key "Call up setup" was pressed.	• Enter key = Do not call up setup • ESC = Call up setup
41	Do you really want to reset all data to the works setting?	The key "Reset" was pressed.	• ESC = Do not carry out reset • Enter key = Carry out reset
42	Calibration not possible, sensor "Hopper full" not damped.	Key "Start calibration" was pressed and sensor "Hopper full" transmits no signal. Calibration is only admissible when the filling level in the hopper of the ZG-B has a given value.	• Press key "Predosing" • Check sensor

8.3 Failure of setting motors

If faults occur in the **AMATRON 3** or electric setting motors and cannot be rectified immediately, you can still continue working:

- after extending the setting motors,
- after modifying the setting lever.

The rate as per setting chart is then determined by means of the setting lever (Fig. 64/1).

1. Close the hydraulic slider.
2. Release the thumb screw (Fig. 64/2).
3. Look for the required slider position on the scale (Fig. 64/3).
4. Adjust the read-off edge (Fig. 64/4) of the setting lever pointer (Fig. 64/5) so that it corresponds to the scale value.
5. Insert washers behind the setting lever.
6. Retighten the thumb screw (Fig. 64/2).

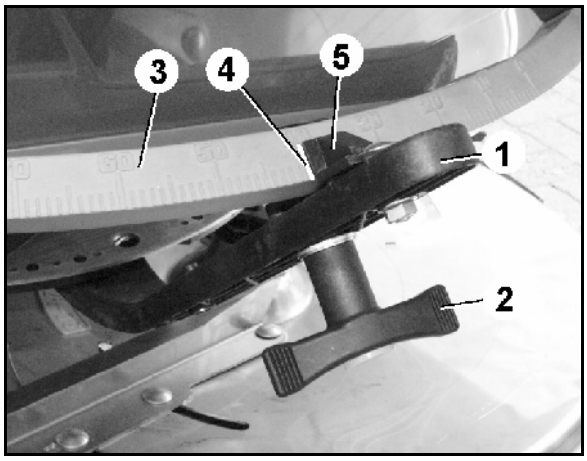

Fig. 64

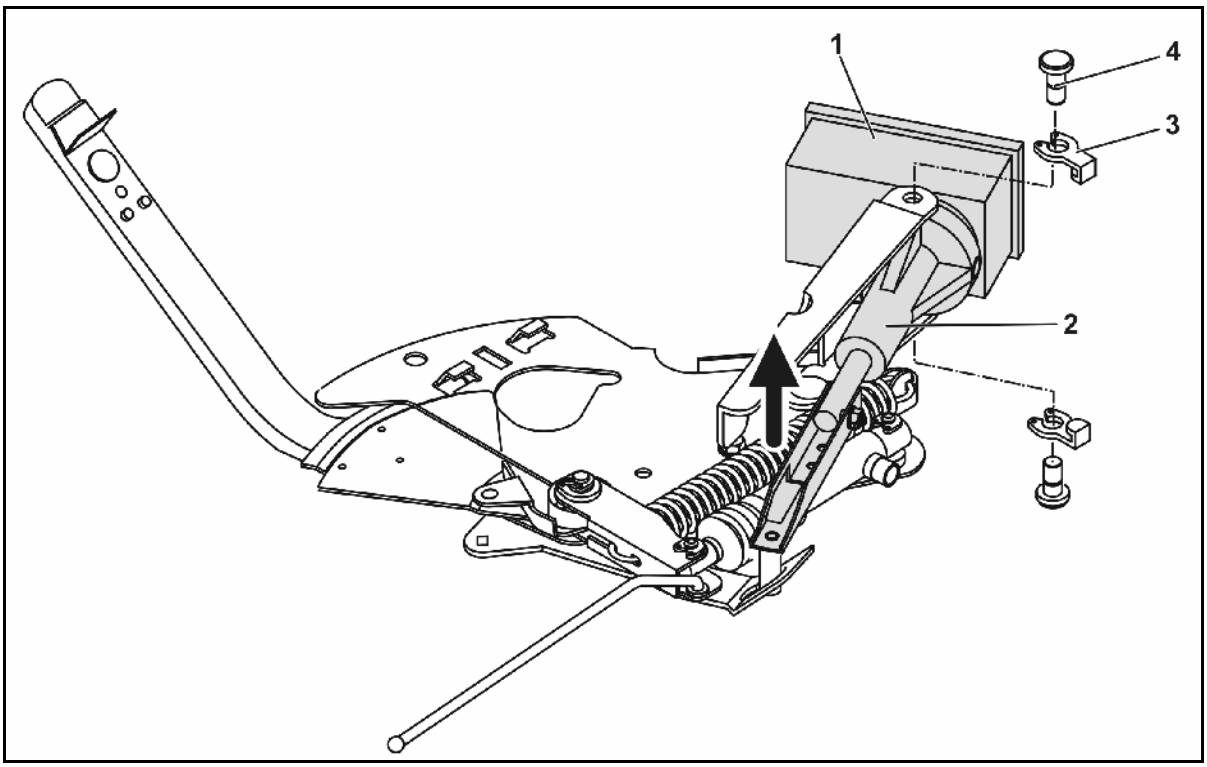

Fig. 65

Extending the setting motors and modifying the setting lever:

1. Remove the two securing clips (Fig. 65/3) with pliers /.
2. Withdraw the two hinge pins (Fig. 65/4).
3. Remove the setting motor (Fig. 65/1) from the console.
4. Raise the setting motor /and detach the pushrod (Fig. 65/2) from the plug-in connection of the dosing slider.
5. Then again secure the setting motor with detached pushrod in the engine console in accordance with regulations.

Secure the detached pushrod (Fig. 65/2) against swivelling into the working area of the hydraulic cylinder.

6. Set up the clamping device (Fig. 66/1) for setting levers (Fig. 66/2) as follows:
   6.1 Unscrew the wing nut (Fig. 66/3).
   6.2 Remove the screw and reposition the two washers (Fig. 66/4) from the back (Fig. 66/5) to the front (Fig. 66/6).

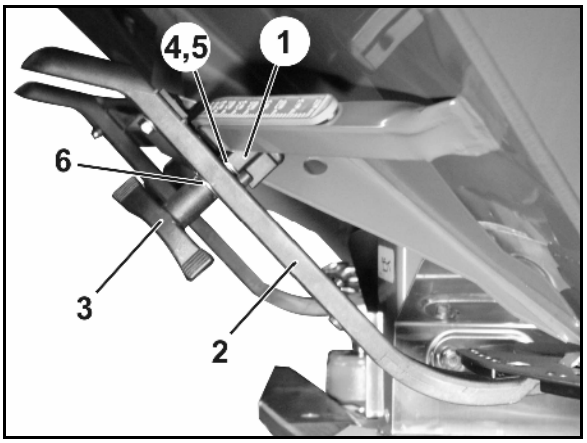

Fig. 66

8.4 Distance sensor (pulses/100 m failure)

Entering a simulated speed in the Service Set-up menu allows you to continue spreading if the sensor fails.

To do so:

1. Remove the signal cable from the tractor basic equipment.
2. [km/t sim.] Enter a simulated speed.
3. Maintain the simulated speed as you continue spreading.

As soon as pulses are registered by the distance sensor, the computer switches to the actual speed of the distance sensor.

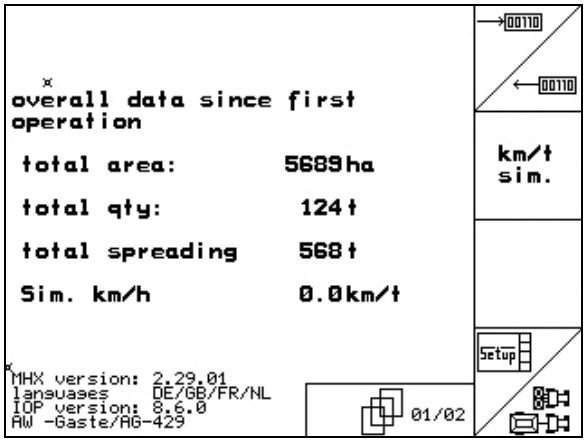

Fig. 67

AMAZONEN-WERKE

H. DREYER GmbH & Co. KG

Postfach 51
D-49202 Hasbergen-Gaste
Germany

Tel.: + 49 (0) 5405 501-0
Fax: + 49 (0) 5405 501-234
e-mail: amazone@amazone.de
http:// www.amazone.de

Plants: D-27794 Hude • D-04249 Leipzig • F-57602 Forbach
Branches in England and France

Manufacturers of mineral fertiliser spreaders, field sprayers, seed drills, soil cultivation machines, multipurpose warehouses and communal units