Operator's Manual

AMAZONE

On-board computer
AMATRON +
For use in conjunction with
pneumatic seed

AD-P and AVANT

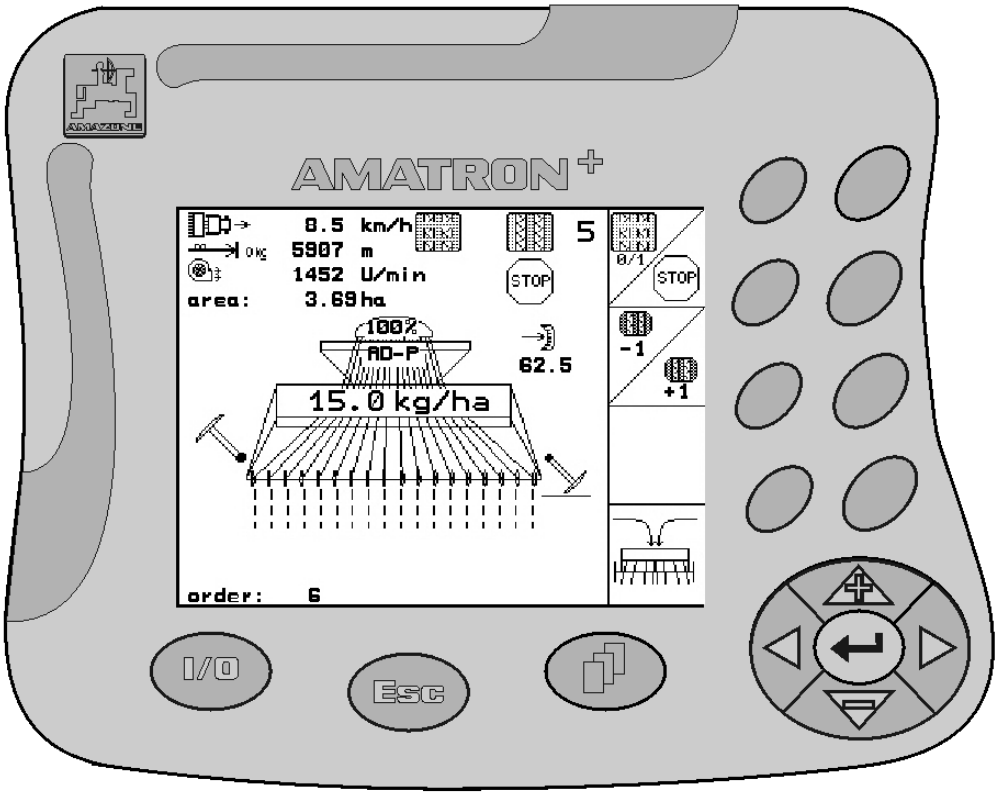

MG3252
BAG0072.0 11.08
Printed in Germany

GB

Before starting to operate the machine, please carefully read and adhere to this instruction manual and safety advice!

AMAZONE

Reading the instruction

Manual and following it should seem to be inconvenient and superfluous as it is not enough to hear from others and to realize that a machine is good, to buy it and to believe that now everything should work by itself. The person in question would not only harm himself but also make the mistake of blaming the machine for possible failures instead of himself. In order to ensure success one should enter the mind of a thing, make himself familiar with every part of the machine and get acquainted with how it's handled. Only in this way could you be satisfied both with the machine and with yourself. This goal is the purpose of this instruction manual.

Leipzig-Plagwitz 1872. Rud. Sack.

Identification data

Enter the machine identification data here. You will find the identification data on the type plate.

Machine identification number: (ten-digit)	
Type:	Amatron+
Year of manufacture:	
Basic weight (kg):	
Approved total weight (kg):	
Maximum load (kg):	

Manufacturer's - address

AMAZONEN-WERKE

H. DREYER GmbH & Co. KG

Postfach 51

D-49202 Hasbergen

Tel.: + 49 (0) 5405 50 1-0

Fax.: + 49 (0) 5405 501-234

E-mail: amazone@amazone.de

Spare part orders

AMAZONEN-WERKE

H. DREYER GmbH & Co. KG

Postfach 51

D-49202 Hasbergen

Tel.: + 49 (0) 5405 501-290

Fax.: + 49 (0) 5405 501-106

E-mail: et@amazone.de

Online spare parts catalogue: www.amazone.de

When ordering spare parts, always specify the (ten-digit) machine identification number.

Formalities of the operating manual

Document number:	MG3252
Compilation date:	11.08

© Copyright AMAZONEN-WERKE H. DREYER GmbH & Co. KG, 2008

All rights reserved.

Reprinting, even of sections, only possible with the approval of AMAZONEN-WERKE H. DREYER GmbH & Co. KG.

Foreword

Dear Customer,

You have chosen one of the quality products from the wide product range of AMAZONEN-WERKE, H. DREYER GmbH & Co. KG. We thank you for your confidence in our products.

On receiving the machine, check to see if it was damaged during transport or if parts are missing. Using the delivery note, check that the machine was delivered in full including the ordered special equipment. Damage can only be rectified if problems are signalled immediately!

Before first commissioning, read and understand this operating manual, and particularly the safety information. Only after careful reading will you be able to benefit from the full scope of your newly purchased machine.

Please ensure that all the machine operators have read this operating manual before commissioning the machine.

Should you have problems or queries, please consult this operating manual or give us a call.

Regular maintenance and timely replacement of worn or damaged parts increases the lifespan of your machine.

User evaluation

Dear Reader,

We update our operating manuals regularly. Your suggestions for improvement help us to create ever more user-friendly manuals. Send us your suggestions by fax.

AMAZONEN-WERKE

H. DREYER GmbH & Co. KG

Postfach 51

D-49202 Hasbergen

Tel.: + 49 (0) 5405 50 1-0

Fax.: + 49 (0) 5405 501-234

E-mail: amazone@amazone.de

1 User Information 7
1.1 Purpose of the document 7
1.2 Locations in the operating manual 7
1.3 Diagrams used 7

2 General safety instructions 8
2.1 Representation of safety symbols 8

3 Installation instructions 9
3.1 Mounting of the terminal 9
3.2 Battery cable 10

4 Product description 11
4.1 Keys and function fields 12
4.1.1 Shift key 13
4.2 Entries on AMATRON+ 14
4.3 Entering text and numbers 14
4.3.1 Selection of options 15
4.3.2 Toggle function 15
4.4 Software version 15
4.5 Hierarchy of the AMATRON+ 16

5 Operation 17
5.1 Start screen 17
5.2 Main menu 17
5.3 Machine data menu 18
5.3.1 Tramline rhythm (machine data 01/04) 20
5.3.2 Input of the sown and unsown distances (m) for the intermittent tramline (Machine data 01/04) 21
5.3.3 Calibration of forward speed sensor (Machine data 01/04) 22
5.3.4 Seed rate reduction during tramline creation 25
5.4 Starting a job 26
5.4.1 External job 27
5.5 Calibration 27
5.5.1 Calibration of the drill with remote seed rate control 28
5.5.2 Calibration of the drill with full electric metering system 29
5.6 Service Setup 31
5.7 Terminal set-up 36

6 Use on the field 38
6.1 Specified quantity adjustment 38
6.2 Preselection for hydraulic functions 38
6.3 Work menu display 39
6.4 Functions in work menu 40
6.4.1 Tramline control 40
6.4.2 Track marker (Avant) 41
6.4.3 Blocking the star wheel 41
6.4.4 Switching part widths (Avant with electric full dosing) 42
6.4.5 Electric full dosing 43
6.4.6 Coulter pressure and harrow pressure 43
6.4.7 Folding the machine (Avant 03-2) 44
6.4.8 Rotary cultivator working depth 45
6.4.9 Coulter lift 45
6.4.10 Front tank lighting (Avant) 45

6.5 Advice on field operation 46
6.5.1 Key assignment in work menu **AD-P** with gearbox 47
6.5.2 Key assignment in work menu **AD-P** with full dosing 47
6.5.3 Layout menu - joystick **AD-P** 48
6.5.4 Key assignment in work menu **Avant** with gearbox 49
6.5.5 Key assignment in work menu **Avant** with full dosing 50

7 Joystick 51

7.1 Fitting 51
7.2 Function 51
7.3 Key layout: 52

8 Maintenance 53

8.1 Calibration of gearbox 53

9 Helpmenu 54

10 Malfunction 54

10.1 Alarm 54
10.2 Failure of the forward speed sensor 55

1 User Information

The User Information section supplies information on use of the operating manual.

1.1 Purpose of the document

This operating manual

- Describes the operation and maintenance of the machine.
- Provides important information on safe and efficient handling of the machine.
- Is a component part of the machine and should always be kept with the machine or the traction vehicle.
- Keep it in a safe place for future use.

1.2 Locations in the operating manual

All the directions specified in the operating manual are always seen from the direction of travel.

1.3 Diagrams used

Handling instructions and reactions

Activities to be carried out by the user are given as numbered instructions. Always keep to the order of the handling instructions. The reaction to the handling instructions is given by an arrow.

Example:

1. Handling instruction 1

→ Reaction of the machine to handling instruction 1

2. Handling instruction 2

Lists

Lists without an essential order are shown as a list with bullets.

Example:

- Point 1
- Point 2

Number items in diagrams

Numbers in round brackets refer to the item numbers in the diagrams. The first number refers to the diagram and the second number to the item in the figure.

Example: (Fig. 3/6)

- Figure 3
- Item 6

2 General safety instructions

Knowledge of the basic safety information and safety regulations is a basic requirement for safe handling and fault-free machine operation.

The operation manual

- Must always be kept at the place at which the machine is operated.
- Must always be easily accessible for the user and maintenance personnel.

2.1 Representation of safety symbols

Safety instructions are indicated by the triangular safety symbol and the highlighted signal word. The signal word (DANGER, WARNING, CAUTION) describes the gravity of the risk and has the following significance:

DANGER

Indicates an immediate high risk which will result in death or serious physical injury (loss of body parts or long term damage) if not avoided.

If the instructions are not followed, then this will result in immediate death or serious physical injury.

WARNING

Indicates a medium risk, which could result in death or (serious) physical injury if not avoided.

If the instructions are not followed, then this may result in death or serious physical injury.

CAUTION

Indicates a low risk which could incur minor or medium level physical injury or damage to property if not avoided.

IMPORTANT

Indicates an obligation to special behaviour or an activity required for proper machine handling.

Non-compliance with these instructions can cause faults on the machine or in the environment.

NOTE

Indicates handling tips and particularly useful information.

These instructions will help you to use all the functions of your machine to the optimum.

3 Installation instructions

3.1 Mounting of the terminal

- The tractor's basic equipment (Fig. 1/1 console with distributor) must be installed to the right of the driver in the cab, within visual range and easy reach, so that it is vibration-free and electrically conductive.

→ Remove the paint from the mounting points to prevent electrostatic charging.

- The distance from the radio unit or aerial must be at least 1 m.

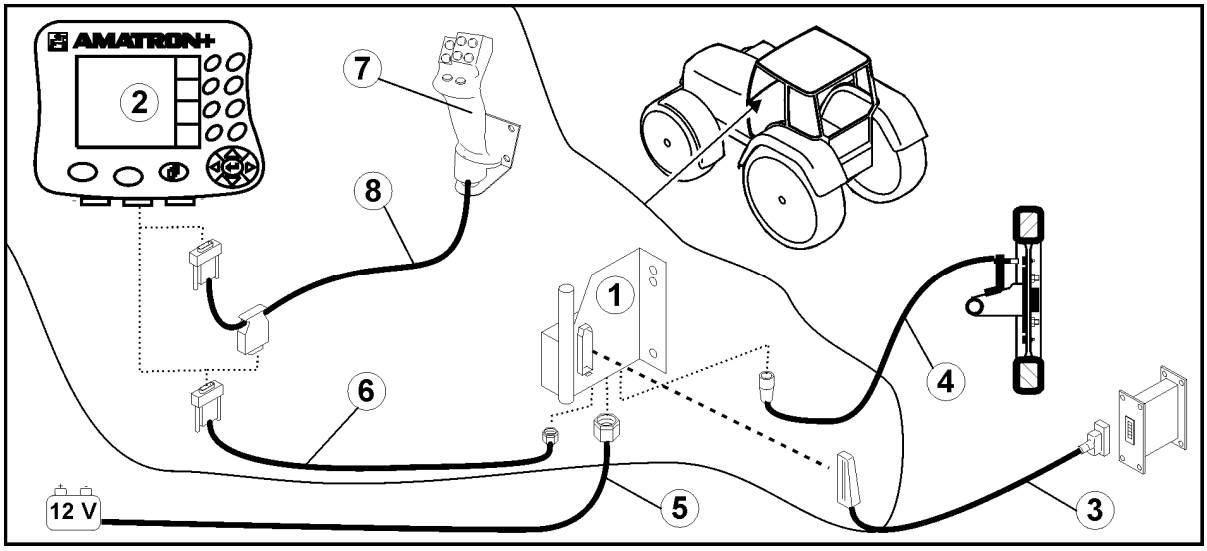

Fig. 1

Connections to tractor's basic equipment:

- The battery cable (Fig. 1/5).
- Signal cable from the tractor signal socket or distance sensor (Fig. 1/4).
- Connecting cable to **AMATRON+** (Fig. 1/6).

To operate

- Plug the **AMATRON+** (Fig. 1/2) into the tractor's basic equipment.
- Insert the connector of the connecting cable (Fig. 1/6) into the middle 9-pin Sub-D bushing (Fig. 2/1).
- Connect the machine via the connector (Fig. 1/3) to the **AMATRON+**.

  The multifunction stick (Fig. 1/7) is connected using a Y-cable (Fig. 1/8).
- The serial interface (Fig. 2/2) allows a PDA to be connected.

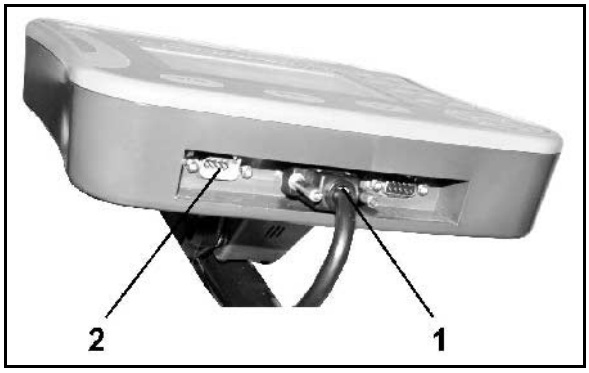

Fig. 2

3.2 Battery cable

The required operating voltage is 12 V and must taken directly from the battery.

> Before connecting the **AMATRON+** to a tractor with several batteries, you need to clarify which battery the computer should be connected to by referring to the tractor operating instructions or by asking the tractor manufacturer!

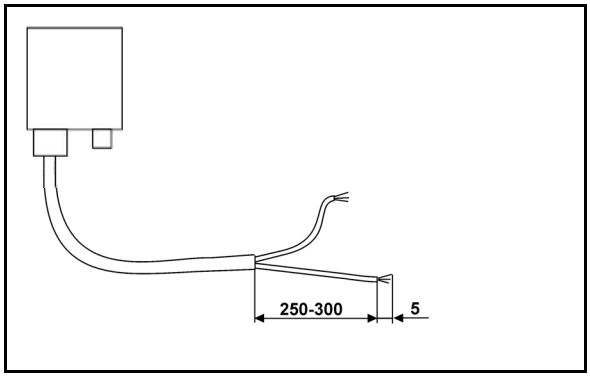

Fig. 3

1. Install and secure the battery cable from the tractor cab to the tractor battery. When installing the battery cable, make sure there are no kinks.
2. Shorten the battery cable to the appropriate length.
3. Strip the cable end (Fig. 3) approx. 250 to 300 mm.

→ Strip the cable ends (Fig. 3) individually 5 mm.

4. Insert the blue cable core (earth) into loose ring lug (Fig. 4/1).
5. Pass pinch through with pliers.
6. Insert brown cable core (+ 12 volts) into free end of connector (Fig. 4/2).
7. Pass pinch through with pliers.
8. Shrink-fit connector (Fig. 4/2) with heat source (lighter or hairdryer) until the adhesive emerges.
9. Connect the battery cable to the tractor battery:
   - Brown cable core to **+**.
   - Blue cable core to **-**.

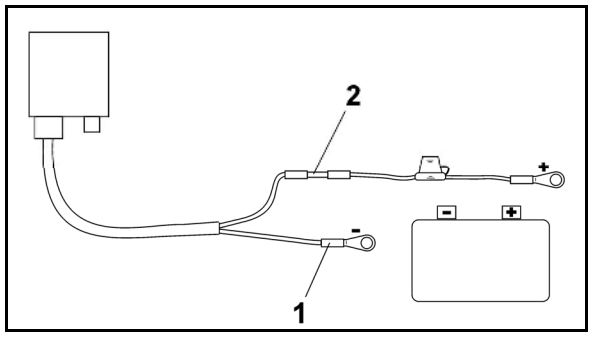

Fig. 4

4 Product description

AMATRON+ makes it easy to control, operate and monitor **AMAZONE** machines.

The **AMATRON+** can be used for various machine types and equipment.

This operating manual shows operation of the **AD-P** and **AVANT** seed drills with the **AMATRON+**.

Operation of the seed drill with the **AMATRON+** differs according to the type and equipment of the machine.

The **AMATRON+** controls a machine computer, providing it with all the necessary information and taking charge of the area-based regulation of the spray rate, depending on the current operational speed.

Once a job has been started, the **AMATRON+** stores the data.

The **AMATRON+** consists of the main menu and the work menu.

Main menu (Fig. 5)

The main menu consists of several submenus in which, before work:

- data must be entered
- settings are determined or must be entered

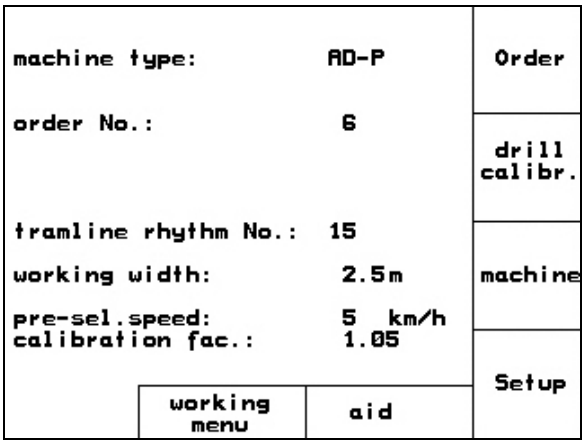

Fig. 5

Work menu (Fig. 6)

- During operation, the work menu indicates all necessary work data.
- The machine is operated via the work menu during use.

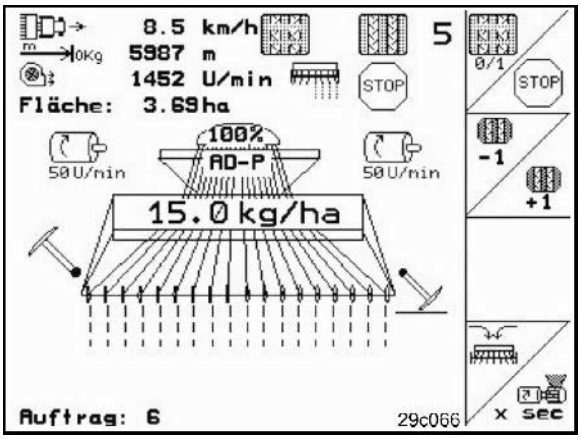

Fig. 6

4.1 Keys and function fields

The functions indicated at the right display edge by a function field (box or diagonally divided box) are controlled via the two rows of keys to the right of the display.

- If boxes appear on the display, only the right key (Fig. 7/1) is assigned to the function field (Fig. 7/A).
- If the boxes are diagonally divided:
  - the left key (Fig. 7/2) is assigned to the top left function field (Fig. 7/B).
  - the right key (Fig. 7/3) is assigned to the bottom right function field (Fig. 7/C).

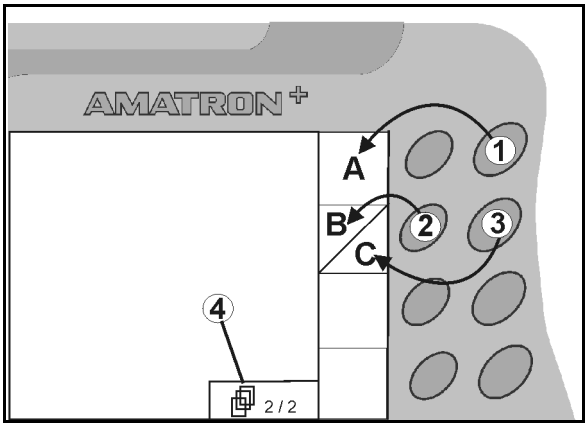

Fig. 7

I/0	On/Off (Always switch off the **AMATRON+** when driving on public roads).
Esc	• Return to last menu • Switch between work menu - main menu • Cancel entry • To work menu (hold down key at least 1 second)
	• Scroll to other menu pages (only possible if (Fig. 7/4) appears in display)• Multi-function stick learning menu (see page 54)
	• Move cursor left in display
	• Move cursor right in display
	• Take over selected numbers and letters • Confirm critical alarm • 100% quantity in work menu
	• Move cursor up in display • Increase specified quantity during work by percentage application rate increase (e.g.:+10%) (Adjusting percentage application rate increase, see page 19)
	• Move cursor down in display • Reduce specified quantity during work by percentage application rate increase (e.g.:-10%) (Adjusting percentage application rate increase, see page 19)

4.1.1 Shift key

- The shift key is located on the back of the unit (Fig. 8/1).
- When the Shift-key is activated, this is indicated on the display (Fig. 9/1).
- When the Shift-key is actuated, further function fields appear (Fig. 10) and the assignment of the function keys is altered accordingly.

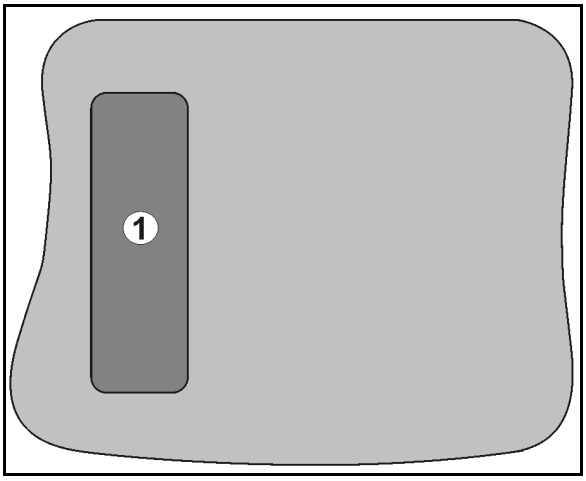

Fig. 8

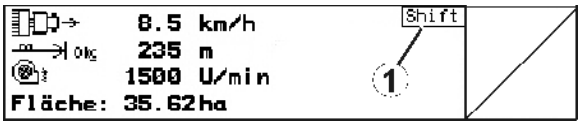

Fig. 9

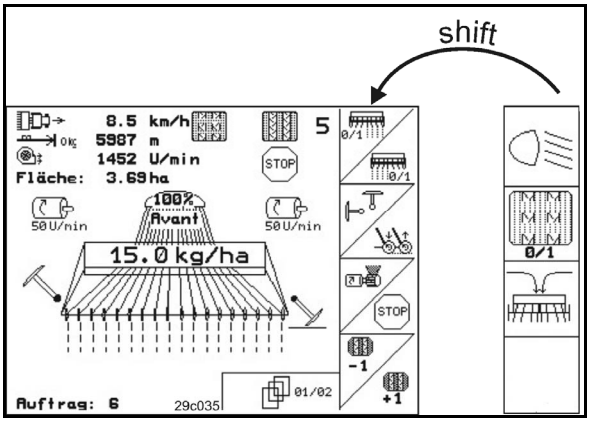

Fig. 10

4.2 Entries on AMATRON+

For operation of the AMATRON+, the function fields appear in this operating manual in order to make clear that the key for the respective function field must be pressed.

Example:

- Function field A:

Description in the operating manual:

A Carry out function **A**.

Action:

The operator uses the key (Fig. 11/1) assigned to the function field to perform function **A**.

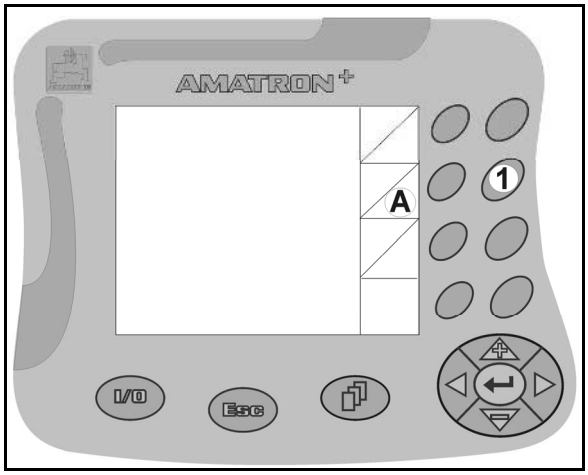

Fig. 11

4.3 Entering text and numbers

If it is necessary to enter texts or numbers on the AMATRON+, the input menu (Fig. 12) appears.

In the lower part of the display, a selection field (Fig. 12/1) appears with letters, numbers and arrows which can be used to compose the input line (Fig. 12/2).

, , , Choose letters or numbers in the selection field (Fig. 12/3).

- Confirm the selection (Fig. 12/3).
- CE Delete the input line.
- A↔a Switch between upper and lower case.
- ✓ Confirm the text entered.

The arrows ↔ in the selection field (Fig. 12/4) allow movement in the text line.

The arrow ⇤ in the selection field (Fig. 12/4) deletes the last entry.

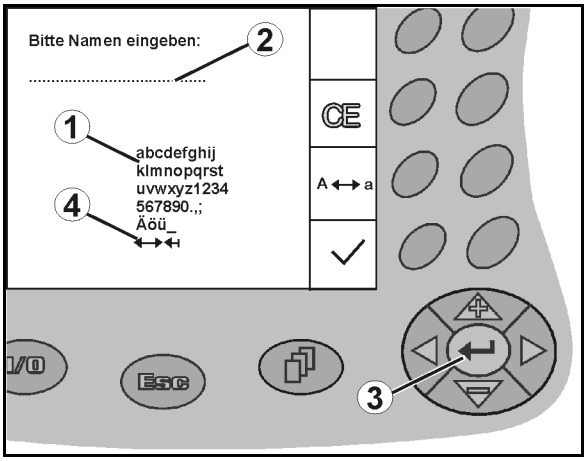

Fig. 12

4.3.1 Selection of options

1. / Position the selection arrow (Fig. 13/1).
2. Apply the selection (Fig. 13/2).
3. Confirm the selection.

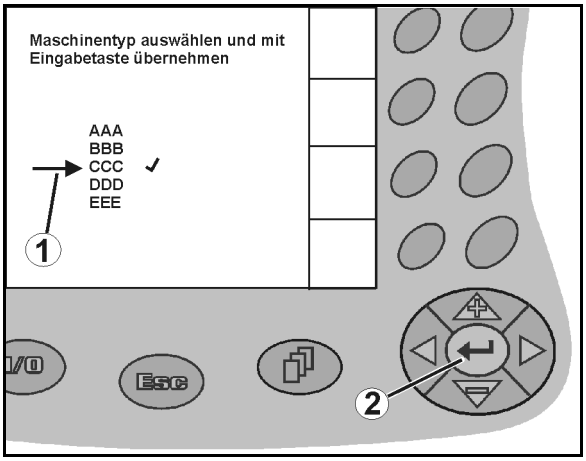

Fig. 13

4.3.2 Toggle function

Switching functions on/off:

- Press function key (Fig. 14/2) once
→ Function **on** (Fig. 14/1).
- Again press function key
→ Function **off**.

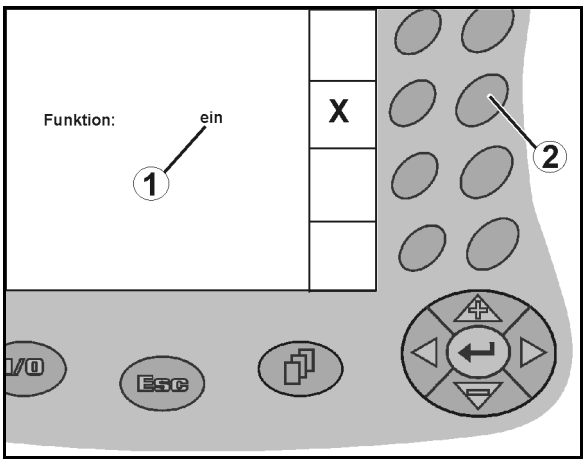

Fig. 14

4.4 Software version

This operating manual is valid from software version::

Machine:	Terminal:
MHX-version: 2.17.01	BIN-version: 3.22.0
IOP-version: 6.2.22	IOP-version: 3.4.1

4.5 Hierarchy of the AMATRON+

Main menu ← Esc → **Operational menu**

Order ↓ Esc ↑

new job

Input:

- Name
- Notes
- Choose between (kg/ha or K/m2)
- Seed type
- Job start/continue
- Daily data delete hectares delete hours

Display:

- Job number
- Job name
- Notes
- Required seed rate
- Seed category
- Calibrated gearbox position
- Completed area (ha)
- Completed working hours (h)
- Average work rate (ha/hr)
- Seed rate (kg)
- Trip data area/hours/quantity

drill calibr. ↓ Esc ↑

Menu machine calibration

Input:
Seed drill with gearbox:

- Required seed rate (kg/ha or K/m2)
- Gearbox position for calibration test
- Amount of seed (kg) collected during the calibration test

Seed drill with full electric metering:

- Intended speed of operation (km/h)
- Prime the metering wheels before starting the calibration test

Setup ↓ Esc ↑

Menu Setup

Input:

- Recovery input
- Recovery output
- Simulated speed
- Basic data selection
  - Choose the machine model
  - Configure the tramline system
  - Configure the seed rate adjustment system
  - Dosings
  - Gearbox calibration (only machines with gearbox)
  - Track marker
  - Rotary cultivator PTO
  - Seed level sensor
  - Dosing wheel monitoring

Display:

- Alarm delay time – seed shaft/metering device
- Alarm delay time - tramline system
- Alarm delay time - tramline lay shaft (gravity seed drill)
- Running time, pre-dosing unit (only for full dosing)
- Working width (m)
- Pre--emergence marker system
- Alarm - blower fan speed
- Coulter lift
- Rotary cultivator working depth

- Display -settings
  - Select the national language

Machine ↓ Esc ↑

Menu: machine data

- Tramline rhythm
- Intermittent tramline distance
- Seed rate increments (%)
- Area calibration value (Imp./100 m)

5 Operation

5.1 Start screen

Having switched on the terminal, with the machine connected, the start menu will appear. It shows the terminal software version. After approx. 2 seconds **AMATRON+** automatically jumps into the main menu.

After switching on the terminal **AMATRON+** may load data from the machine's job computer after, for example

- installation of a new job computer,
- installation of a new **AMATRON+** terminals,
- a RESET of the **AMATRON+** terminal

the start screen will show this message.

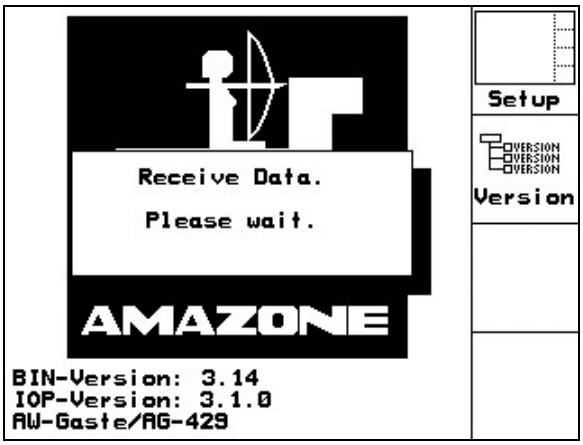

Fig. 15

5.2 Main menu

- [Order] **Job** menu (see page 26)
  - o Data entry for new job.
  - o Start job before beginning spreading.
  - o The data for up to 20 jobs are stored
- [drill calibr.] **Calibration** menü (see page 27)
  - o always carry out a calibration test prior to any sowing operation.
- [machine] **Machine data** menu (see page 18)
  - o Input of machine-specific or individual data.
- [Setup] **Setup** menu (page 31)
  - o Input of basic settings

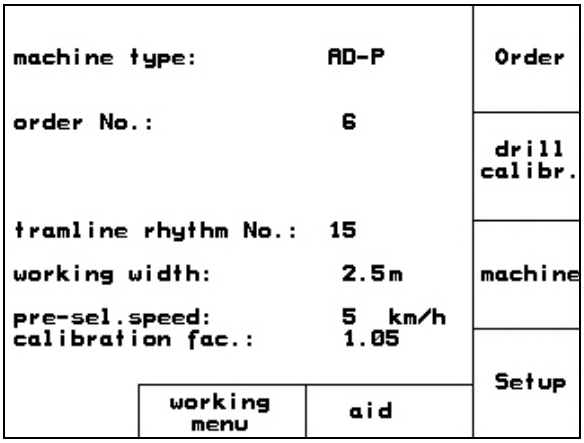

Fig. 16

5.3 Machine data menu

Select **Machine data** in the main menu!

Page one

(Fig. 17)

- Inputting the required tramline rhythm (see page 20).
- Inputting the intermittent tramline function (see page 21).
-

Inputting the application rate increase (as % that the seed rate changes via the and during operation).
-

Calibration of hectare meter sensor (see chapter 5.3.3).

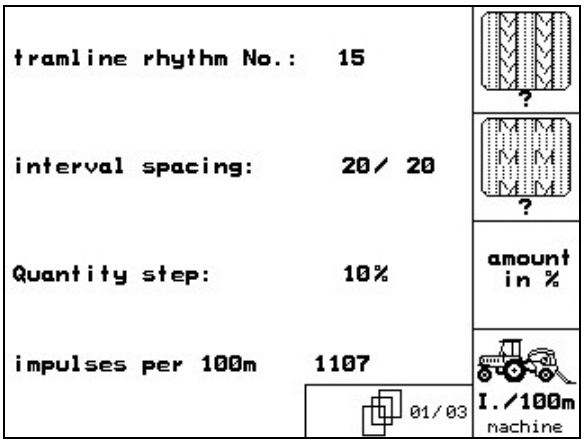

Fig. 17

Page 2 (Fig. 18)

- during operation this sets the fan speed monitor (1/min.) at the level it is currently running.
- Sets the fan speed monitor (1/min.) at the desired level it is intended to be monitored at..
- Inputting the actual quantity of seed (kg) in the seed box
- Inputting the refilled quantity (kg)
- Setting residual amount (kg) left in the seed box at which the filling level alarm should be triggered.

→ The **AMATRON+** triggers the alarm when

- o the theoretically calculated residual amount has been reached or
- o the seedbox level sensor (option) is not covered with seed any more.

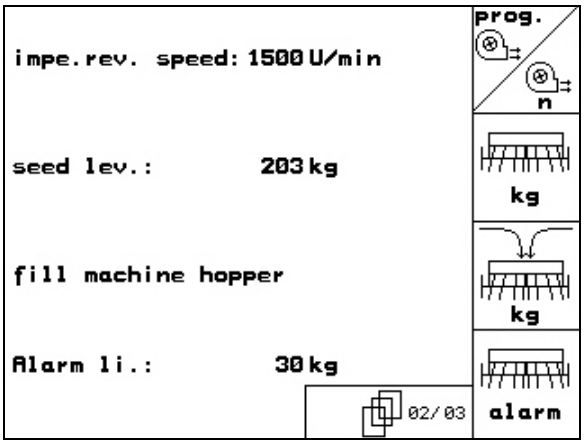

Fig. 18

Page 3 (Fig. 19)

- Setting the seed rate reduction (as %) necessary during tramline creation (see page 25).

> Only required for machines without seed return to hopper.

- Inputting the norm factor for the electric metering drive.

→ standard value: 1

- Tractor equipped with distance sensor (yes/no).

→ Impulses via tractor signal socket.

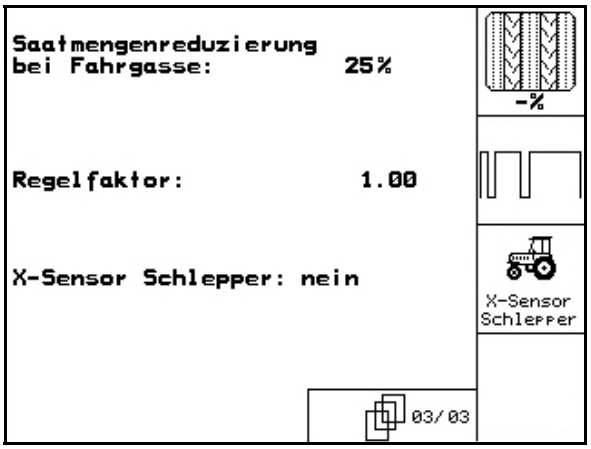

Fig. 19

5.3.1 Tramline rhythm (machine data 01/04)

Refer to the following tables for the number of the tramline rhythm.

Tramline rhythm	1	2	3	4	5	6	7	8	9	10	11	12	13	14
Tramline counter	0	0	0	0	0	0	0	0	0	1	1	0	0	0
	1	0	1	1	1	1	1	1	1	2	0	1	1	1
		1	2	2	2	2	2	2	2	3	3	2	2	2
		2		3	3	3	3	3	3	0	4	3	3	3
					4	4	4	4	4	5	5	4	4	4
						5	5	5	5	6	6	5	5	5
							6	6	6	0	7	6	6	6
								7	7	8	8	7	7	7
									8	9	0	8	8	8
										10	10	9	9	9
												10	10	10
												11	11	11
													12	12
														13

Tramline rhythm	15	16	17	20	21	22	23	26	32					
Tramline counter	1	0	0	0	0	0	0	0	0					
	Rhythm 15 does not create any tramlines.	1	1	1	0	0	0	1	0					
		2	2	2	1	1	1	2	1					
		3	3	3	2	2	2	3	2					
		4	4	4	3	3	3	4	3					
		5	5	5	4	4	4	5	4					
		6	6	6		5	5	6	5					
		7	7	7		6	6	7	6					
		8	8	8			7	8	7					
		9	9	9			8	9	8					
		10	10					10	9					
		11	11						10					
		12	12											
		13	13											
		14	14											
		15	15											
			16											

Double tramline control																				
Fahras-senrhythmus	18 left hand	18 right hand	19 left hand	19 right hand	24 left hand	24 right hand	25 left hand	25 right hand	27 left hand	27 right hand	28 left hand	28 right hand	29 left hand	29 right hand	30 left hand	30 right hand	31 left hand	31 right hand	33 left hand	33 right hand
Fahrgassenzähler	1	1	1	1	1	1	1	1	1	1	1	0	1	1	1	1	1	1	1	1
	2	2	2	2	2	0	2	0	2	0	2	2	2	0	0	2	2	2	2	2
	0	3	3	0	3	3	3	3	3	3	0	3			3	3	0	3	3	3
	4	4	4	4	0	4	4	4	4	4	0	4			4	4	4	4	4	4
	5	5	5	5	5	5	5	5	0	5	5	5			5	0			0	5
	6	6	6	6	6	6	0	6	0	6	6	0			6	6			6	6
	7	0	0	7	0	7	7	7	7	7									7	7
	8	8	8	8	8	8	8	8	8	8									8	8
	9	9	9	9	9	0	0	9	9	0									9	9
	10	10	10	10	10	10	10	10	10	10									10	10
	11	11	11	11			11	11												
	12	0	0	12			12	12												
	13	13	13	13			13	0												
	14	14	14	14			14	14												
	15	15	15	15																
	0	16	16	0																
	17	17	17	17																
	18	18	18	18																

5.3.2 Input of the sown and unsown distances (m) for the intermittent tramline (Machine data 01/04)

- Setting the sowing distance (m) when the intermittent tramline function is switched on.
- Setting the non-sowing distance (m) when the intermittent tramline function is switched on.

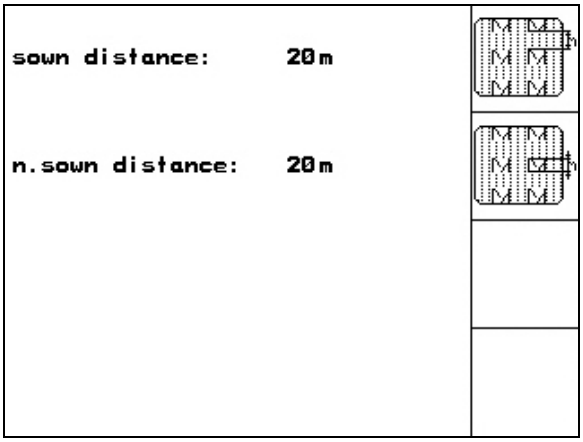

Fig. 20

5.3.3 Calibration of forward speed sensor (Machine data 01/04)

The adjustment of seed rate, the acccumulation of the worked area or an indication of forward speed, **AMATRON+** requires the impulses of the seed drill drive wheel over a measured distance of 100 m.

The value ‘Imp./100m’ is the number of impulses, that **AMATRON+** receives during the calibration distance from the seed drill drive wheel.

Slip on the seed drill drive wheel may vary in changeable soil types (e.g. from heavy to light land) resulting in a change of the value Imp./100m.

It is necessary to determine the ‘Imp./100m’ value:

- prior to the initial operation
- in changeable soils (wheel slip)
- in cases of a deviation between the seed rate determined by the calibration test and the quantity of seed applied in the field
- in case of deviation between the displayed and the actual area drilled.

For a manual input of that value for a subsequent operation in the same field the ‘Imp./100 m’ calibrated value can be entered into the table (Fig. 23).

The calibration figure "Imp./100m" may never be smaller than "250", as otherwise **AMATRON+** does not operate properly.

There are two protential possibilities to enter the Imp/100m:

- [manual Entry] The value is known and is entered manually on the **AMATRON+** termina (see Fig. 23).
- [Start] The value is unknown and will have to be determined by driving down a measured calibration distance of 100 m.

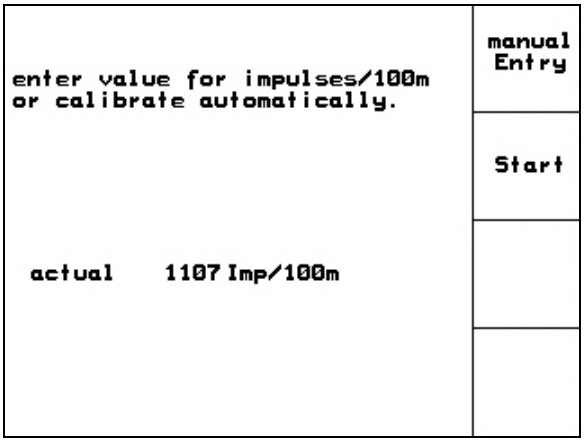

Fig. 21

Calibration travel by driving down a test distance:

1. Carefully measure the test distance of 100 m in the field..
2. Mark beginning and end of the test distance (Fig. 19).
3. Start Start calibration.
4. Carefully drive test distance from the beginning to the end mark.

   when driving off the counter jumps back to 0.

→ The determined impulses are continuously shown on the display.

5. Stop after 100 m.

→ The display now shows the final determined number of impulses.

6. Input the value 'Imp./100m'.

or

Esc Reject the new value 'Imp./100m'..

> If an all-wheel drive is used on the field, it must also be switched on during distance sensor calibration.

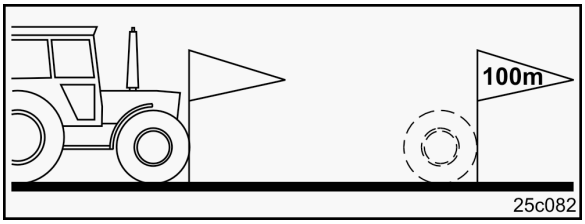

Fig. 22

AD-P						
The "Imp./100m" calibration value depends on both the seed drill model and the soil type!	**AD-P03 Super**		**AD-P03 Special** since 03.2006		**AD-P02 Profi**	**RP-AD-P02 Profi** Pneumatic tyre packer Pack Top seed drills
	without	**with**	**without**	**with**		
	full electric metering		**full electric metering**			
	Calibration value „Impulse/100m“					
Theoretical value	1575	1623	1409	1623	1052	1175
Field 1						
Field 2						

AVANT								
The "Imp./100m" calibration value depends on both the seed drill model and the soil type!!	**FPS 04 PSKW/ PSPW** **since 08.2006**		**FRS 04 PSKW/ PSPW** **since 08.2006**		**FPS 03 Avant** since 09.2000		**FRS 03 Avant** since 01.2001	
	without	**with**	**without**	**with**	**without**	**with**	**without**	**with**
	full electric metering		**full electric metering**		**full electric metering**		**full electric metering**	
	Calibration value „Impulse/100m“							
Theoretical value	1409	1623	1409	1623	1502	1623	1558	1623
Field 1								
Field 2								

Fig. 23

5.3.4 Seed rate reduction during tramline creation

Refer to the following tables for the ecommended % of the seed rate reduction of the table.

Working width	Number of seed coulters	Number of tramline coulters	Recommended % seed rate reduction during tramline creation
3,0 m	24	4	17%
	30	4	13%
	24	6	25%
	30	6	20%
4,0 m	32	4	12%
	40	4	10%
	32	6	19%
	40	6	15%
4,5 m	36	4	11%
	44	4	9%
	36	6	17%
	44	6	14%
6,0 m	48	4	8%
	48	6	12%

Fig. 24

5.4 Starting a job

Select **Job** in main menu!

When the Job menu is opened, the most recently started (most recently processed) job appears.

Information on max. 20 jobs can be stored (job numbers 1 to 20).

To create a new job, select a job number (Fig. 25/1).

-

Enter name
-

Enter note
-

all data in this existing job is deleted
-

Starting the job so that data for this job can be accumulated.
-

Enter desired application rate.
-

Enter the kind of seed, the 1000-grain weight and the seed count.
-

Delete daily data
  - Worked area (ha/day)
  - Quantity applied (amount/day)
  - Working hours (hours/day)

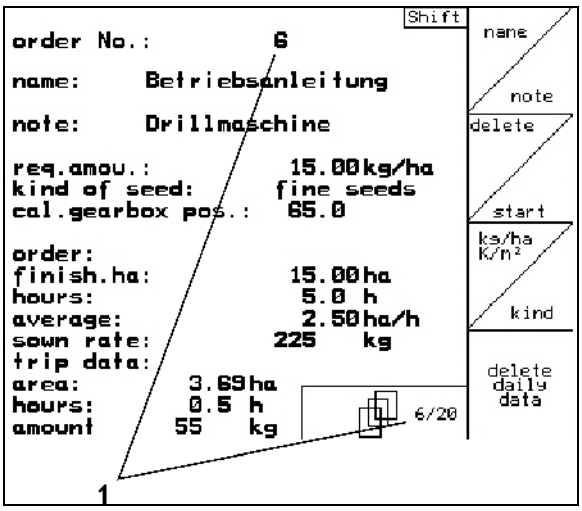

Fig. 25

Jobs that are already stored can be recalled with and started with

once again

Pressed shift key (Fig. 26):

- next job Page forward in order
- prev. job Page backward in order

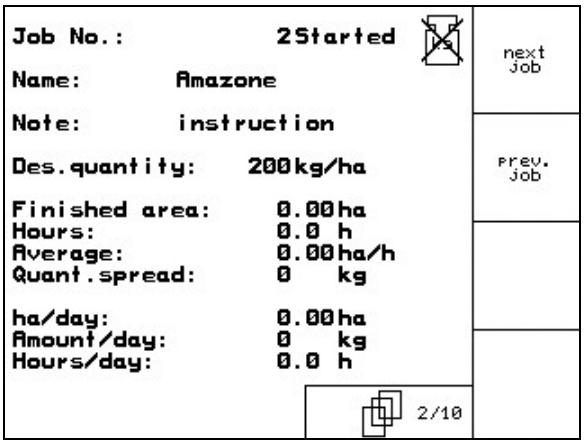

Fig. 26

5.4.1 External job

Via a PDA computer an external job can be transferred into **AMATRON+** and started.

This order always takes job number 21.

The data transfer takes place via the serial interface

- finish external job finish external job.
- kind Enter the kind of seedt
- kg/ha <--> K/m² Enter desired application rate

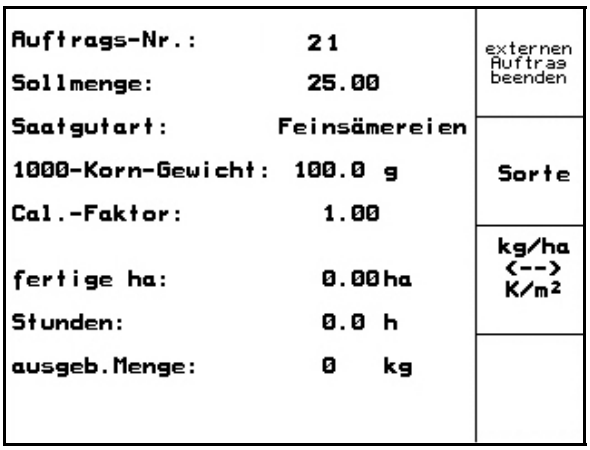

Fig. 27

5.5 Calibration

The calibration test is carried out to ensure that, during the sowing operation the desired seed rate is maintained.

Always carry out a calibration test

- when changing the seed type
- in cases with the same seed type, however, with a different grain size, grain shape, bulk density or different dressing
- when changing from the main seed wheel to the fine seed wheel and vice versa
- in case of a deviation between the calibration test and the actual seed rate.

For carrying out the calibration test, see also the seed drill operating manual.

5.5.1 Calibration of the drill with remote seed rate control

1. Fill the seed hopper with sufficient seed.
2. As described in the operator's manual for the seed drill, place the collecting tray underneath the metering unit(s) and open the injector sluice(s).
3. kg/ha K/m² Check/enter the desired seed rate

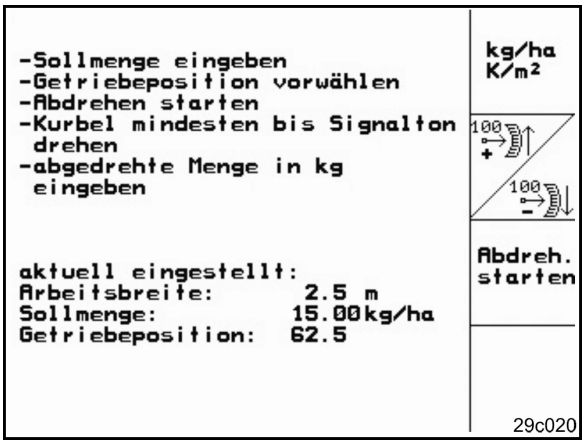

Fig. 28

> This figure can also be entered via the job menu (see page 26).

4. Press the 100 + or 100 − keys to set the gearbox lever to an estimated position
   - o Gearbox position 50:
     Sowing with the main metering wheels
   - o Gearbox position 15:
     Sowing with the fine seed wheels

> The gearbox position which is indicated on the **AMATRON+** must coincide with that indicated on the gearbox setting scale.
> If not first calibrate the gearbox (see page 53)!

5. Close the inspection window on the metering wheel.
6. As described in the operator's manual of the seed drill turn the star wheel clockwise with the aid of the calibration crank until all chambers of the metering wheels are filled with seed and an even seed flow is delivered into the collecting tray(s).
7. Empty the collecting tray(s).

8. Press [start calibr.] and follow the advice on the display:
9. As described in the operator's manual of the seed drill turn the drive wheel with the aid of the crank until the horn sounds.
   AMATRON+ registers any additional turns after the horn sounds in its calculation.
10. To accept the calibration procedure after the horn sounds, press the ↵ key.
11. Weigh the amount of seed collected in the collecting tray(s) (bear in mind the weight of the tray) and enter the weight (kg) into the terminal.

> Any balance used should weigh accurately as inaccuracy will cause deviations within the seed rate actually applied!

AMATRON+ auomatically then calculates and sets the required gearbox position based on the calibration test data entered.

Repeat the calibration procedure to ensure the correct setting.

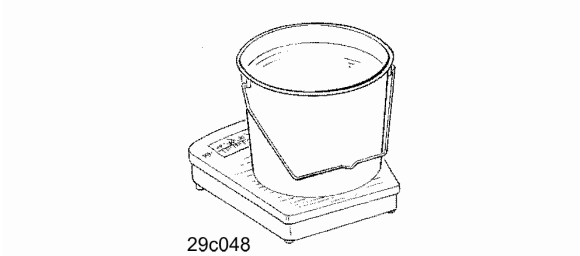

5.5.2 Calibration of the drill with full electric metering system

1. Fill the seed hopper with sufficient seed.
2. As described in the operator's manual for the seed drill, place the collecting tray underneath the metering unit(s) and open the injector sluice(s).
3. [kg/ha K/m²] Check/enter the desired seed rate.

> This figure can also be entered via the job menu (see page 26).

4. [km/h] enter the proposed operational speed (km/h).
5. [Cal. Fac.] prior to the initial calibration set the Cal. Fac. (calibration factor) to 1.00 or a pre-calculated known value.

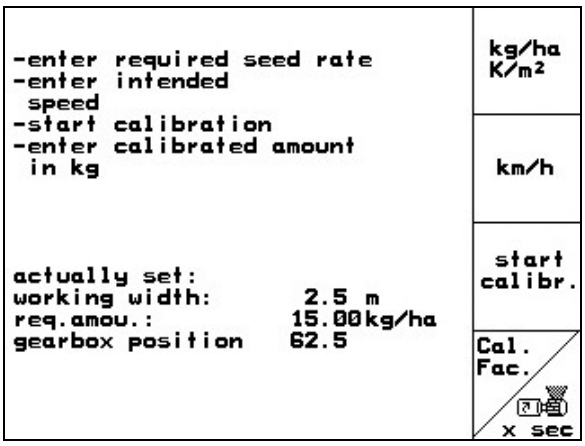

Fig. 29

6.

Prime the cells of the metering wheels once. The priming time can be adjusted and corresponds to the running time of the pre-charger system.
7. Check whether the correct seed type has ben selected.
8. Close the inspection window on the metering wheel.
9. Empty the collecting trays.
10. Press

and follow the advice on the display:
11. Press after the horn sounds to accept the calibration procedure
12. Weigh the amount of seed collected in the collecting tray(s) (bear in mind the weight of the tray) and enter the weight (kg) into the terminal.

> Any balance used should weigh accurately as inaccuracy will cause deviations within the seed rate actually applied!

AMATRON+ automatically then calculates and sets the required gearbox position based on the calibration test data entered.

Repeat the calibration procedure to ensure the correct setting.

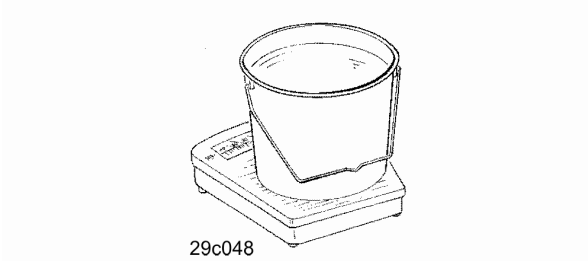

5.6 Service Setup

In the main menu, select **Setup** and confirm with Esc!

The settings in the Set-up menu is a workshop operation and must be carried out only by qualified personnel!

Page 1 01/02 **(Fig. 30)**

- Diagnosis computer input (only for customer service).
- Diagnosis computer output (only for customer service).
- km/h sim. Enter simulated speed (allows continued spreading despite faulty distance sensor, see page 54).
- Terminal setup (see page 36).
- Enter basic data (see page 32).

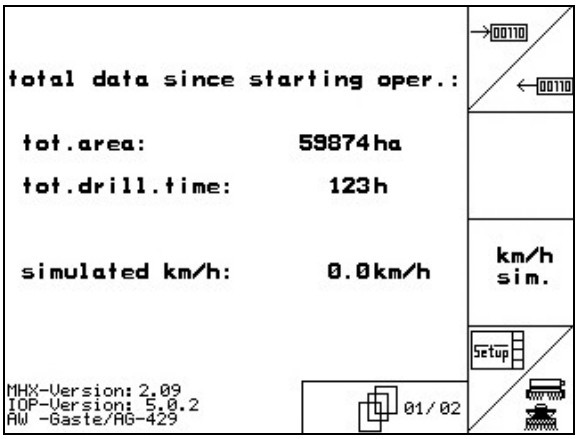

Fig. 30

Page 2 02/02 **(Fig. 31)**

- RESET job computer Reset the machine computer to factory settings. All entered and generated data (jobs, machine data, calibration values, set-up data) will be lost.

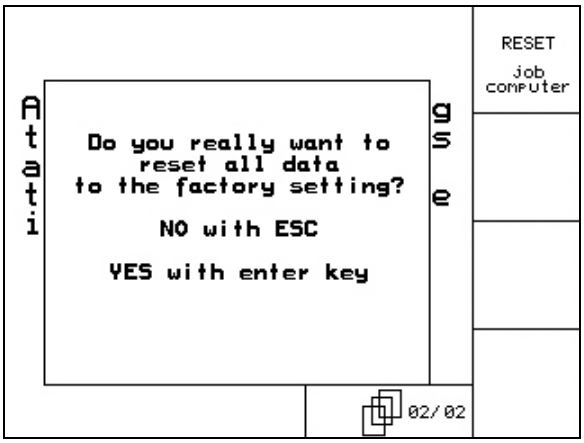

Fig. 31

Page 1 01/05 **of the basic data (Fig. 32)**

- Selection machine type
- konfig. Fahrgassensystem wählen
  - o Contractor
  - o Single tramline - actuation by linear tramline motor
  - o Double tramline - actuation by two linear tramline motors

→ The last selected value will be stored.

- ? Configure remote seed rate control
- ? Configure remote seed rate control
  - o no remote seed rate control
  - o remote seed rate control via Vario gearbox
  - o Full electric metering wheel drive.
- n ? Enter number of metering procedures.
- Cal. Calibrate gearbox (see page 53)

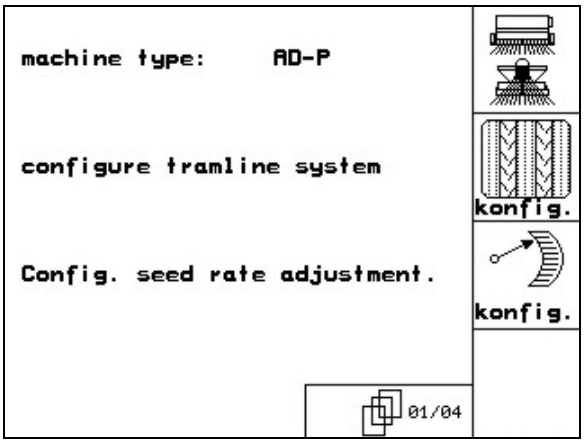

Fig. 32

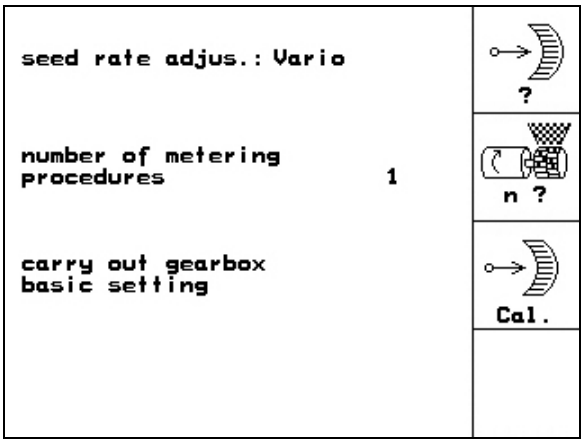

Fig. 33

Page 2 02/05 of the basic data (Fig. 31)

- Number of bout marker sensors

  Number of bout marker sensors

  - one (one bout marker sensor registers the track marker position)
  - none (no bout marker sensor).

- Rotary cultivator monitoring

  - no (PTO speed sensor does not exist).

  Fixed machine:

  - 2 - two sensors

  Foldable machine:

  - 3/1 - three sensors, sensors not integrated into gearbox
  - 3/20 - three sensors, sensors integrated into gearbox

> Incorrect entry for rotary cultivator monitoring may result in damage to the PTO shaft!

- Low level sensor in the seed hopper

  - yes
  - no

- Monitoring of the metering wheels

  - 1
  - 2
  - no

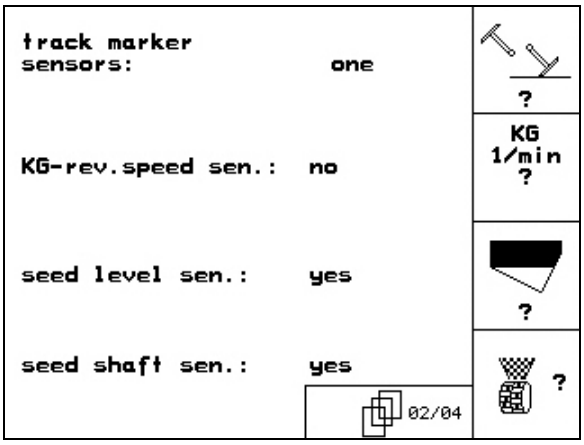

Fig. 34

Page 3 03/05 of the basic data (Fig. 32)

- t Alarm Input of the delay time for metering wheel alarm
- t Alarm Input of the delay time for tramline sytem alarm
- t Alarm Input of the delay time of tramline lay shaft alarm (only possible on gravity seed drills).
- running time Input of the running time (in seconds) of the pre-charging system

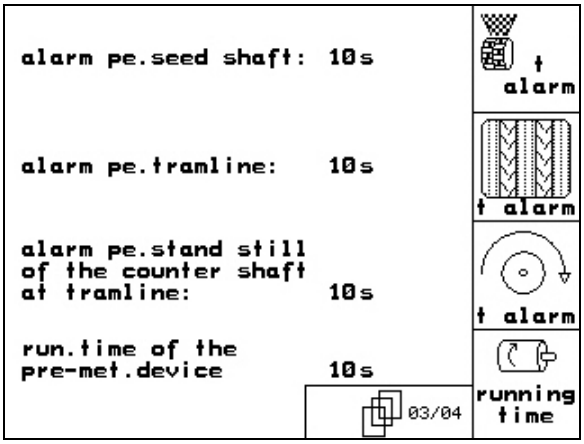

Fig. 35

Page 4 04/05 of the basic data (Fig. 36)

- m Input of the working width (m)
- ? Pre-emergence markers:
  - none
  - hydr. actuated
  - elektr. actuated
- Alarm Alarm trigger limit when the fan speed deviates from the desired value (in %).

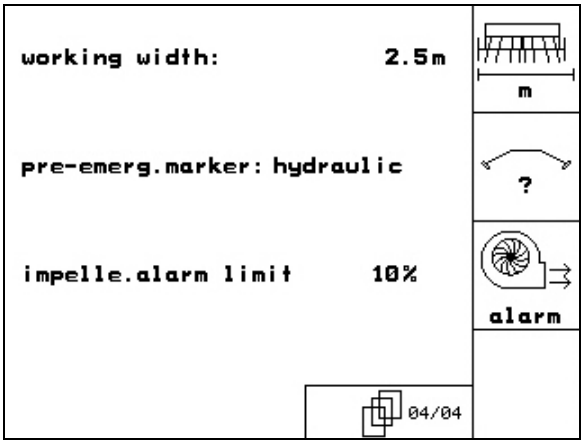

Fig. 36

Page 5 05/05 Basic data (Fig. 37)

- ? Coulter lift fitted
  - o yes
  - o no.
- ? Rotary cultivator adjuster fitted
  - o yes
  - o no

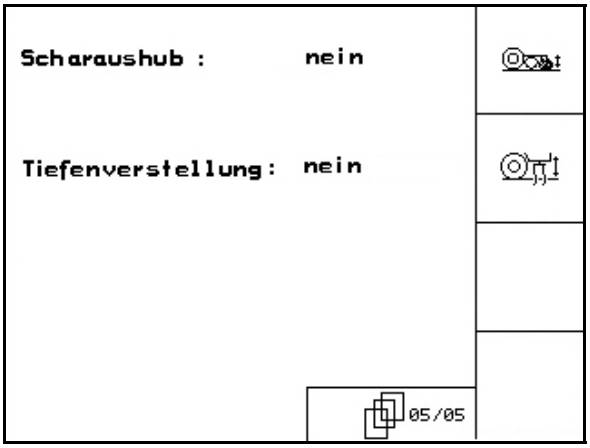

Fig. 37

5.7 Terminal set-up

Press Scroll and Shift simultaneously!

Terminal Set-up is used to change display settings.

- Setup Change display settings.
- Version Display devices and software versions on the bus.

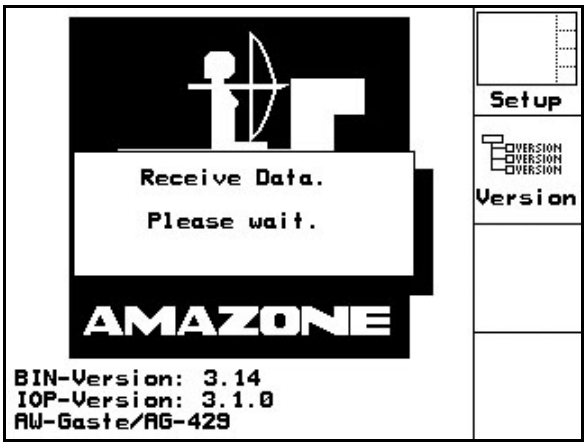

Fig. 38

Page 1 01/03 of Terminal set-up

- Set the contrast via the function fields Kon. - or Kon. +
- Set the brightness via the function fields - or +.
- Invert the display black ← → white Invert. .
- Key for sound on/off
- Delete the stored data via the function field Reset . (see page 2 in Set-up menu, page 31).
- Set the language of the user interface via the function field Langua..
- ESC Exit Terminal set-up menu..

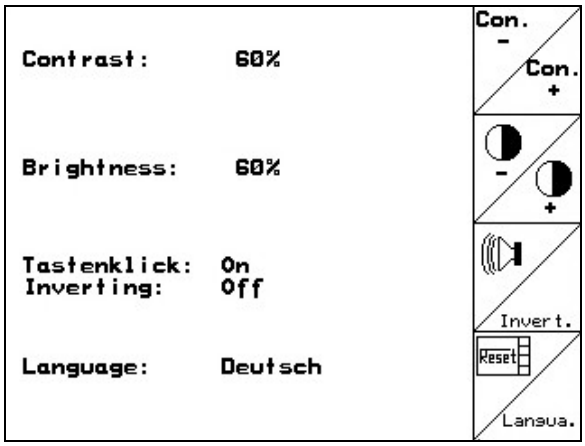

Fig. 39

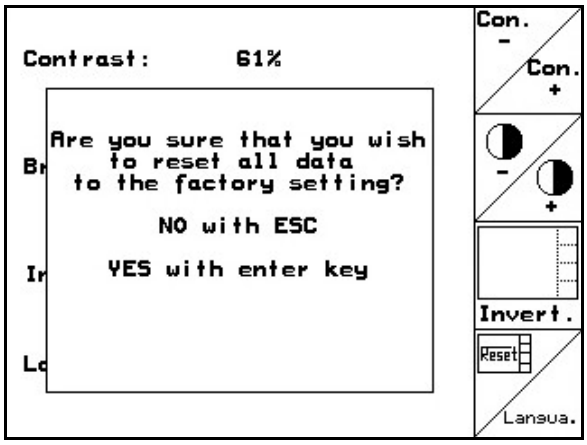

Fig. 40

The Terminal reset function resets all terminal data to the factory settings. No machine data are lost.

Page 2 02/03 of Terminal set-up

- Entry of time
- Entry of date
- RS232 Entry of data transfer speed

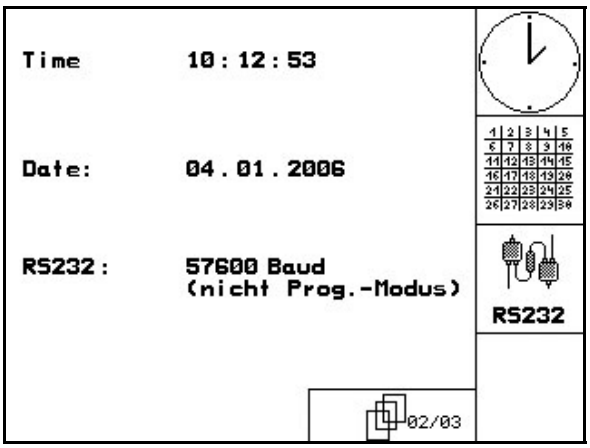

Fig. 41

Page 3 03/03 of Terminal set-up

- Delete program:

1. , Select program.
2. löschen Delete program.

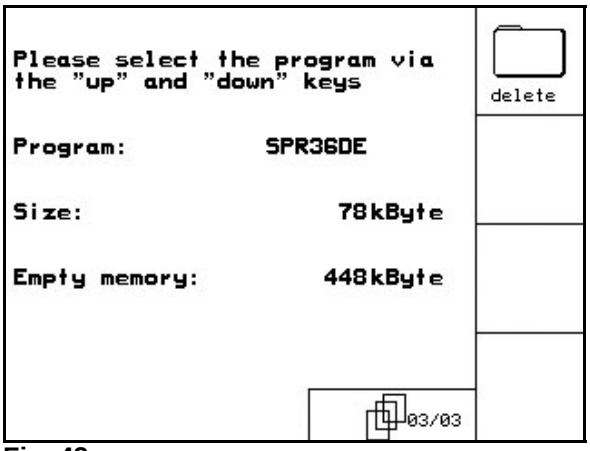

Fig. 42

6 Use on the field

CAUTION

During travel to the field and on public roads, the AMATRON+ should always be switched off!

→ **Incorrect use leads to the risk of accidents!**

Before seeding is started, the following information must be entered:

- Machine data (see page **18**)
- Job data (see page 26)
- Calibration test data (see page 27).

6.1 Specified quantity adjustment

The sowing rate can be changed at will during the work at the press of a key

Each press of the key increases the sowing rate on both sides by the rate increase (page 19) (e.g. +10%).

Reset sowing rate to 100% on both sides.

Each press of the key reduces the sowing rate on both sides by the rate increase (page 19) (e.g. -10%).

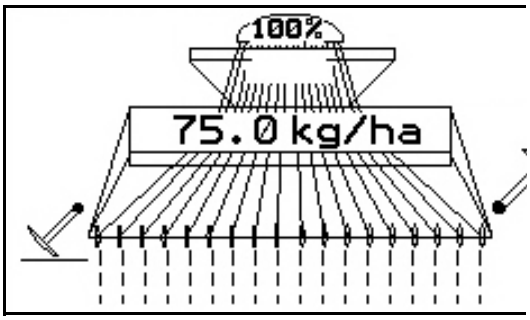

Fig. 43

The changed specified value is indicated in the work menu in kg/ha and per cent (Fig. 43).

6.2 Preselection for hydraulic functions

1. Preselect a hydraulic function via a function key.
2. Operate tractor control unit.

→ The preselected hydraulic function is carried out.

The hydraulic preselection functions (Fig. 44/1) are displayed in the work menu.

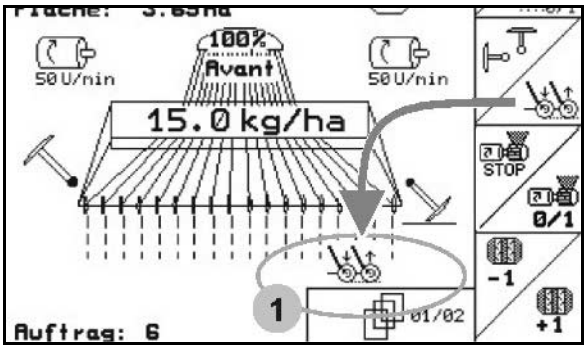

Fig. 44

Options which

- are switched off in the Set-up menu
- do not belong to the machine equipment (options)

are not indicated in the work menu (function fields are not assigned).

6.3 Work menu display

Speed-

Distance to refill-

Blower fan speed-

Worked area-

1. Tramline system active
2. Interval tramline system active
3. Tramline counter
4. Interrupt tramline rhythm/ STOP shifting on of tramline

Preselection of coulter pressure / track marker (AD-P)

Dosing:

Electrical full dosing Dosing unit speed display

Dosing unit, left

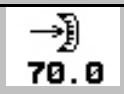

Vario gearbox with gearbox setting display

One dosing unit / dosing unit, right

Specified quantity in %

kg/ha

Track marker active -

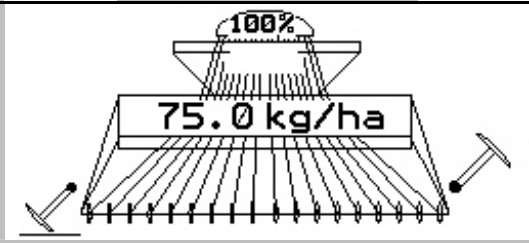

Track marker not active

Work modes:

1. Machine receives no impulses from the distance sensor.

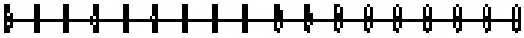

Dosing unit not running.

2. Machine receives impulses from the distance sensor.

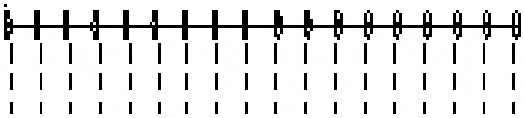

Dosing unit running, machine in operational position, no display in tramlines.

3. Machine receives impulses from the distance sensor.

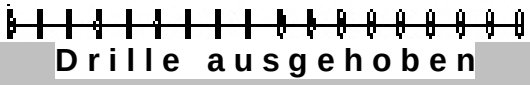

Dosing unit not running, machine is raised.

Hydraulic preselection functions

			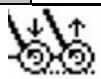
Coulter lift	Preselection of KG working depth	Block star wheel	Coulter pressure (Avant)

Current job

Open page in work menu

6.4 Functions in work menu

6.4.1 Tramline control

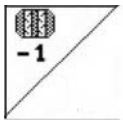

Switch back tramline counter

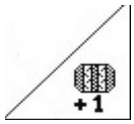

Switch forward tramline counter

The tramline counter switches when the machine is raised.

Fig. 45/...

(1) Display, tramline system switched on

(2) Display, current tramline number

(3) Display, tramline counter shift suppressed

(4) Display, interval tramline control switched on

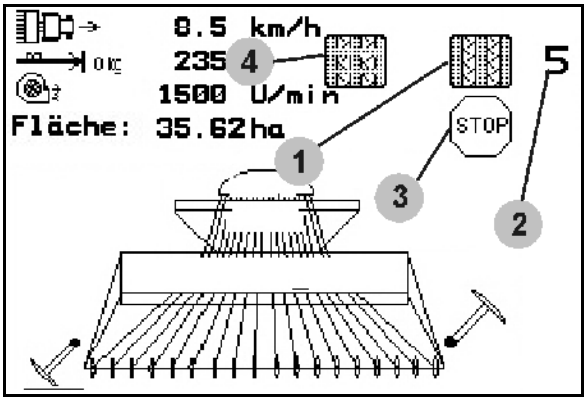

Fig. 45

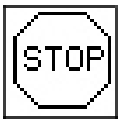

Suppress shift on of tramline counter.

1. Stop tramline counter.

→ When the machine is raised, the tramline counter does not shift on.

2. Cancel tramline counter stop.

→ The tramline counter switches when the machine is raised.

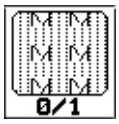

Activating and deactivating interval tramline control

6.4.2 Track marker (Avant)

For raising / lowering the machines, the track markers are automatically actuated alternately.

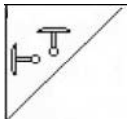

Select track marker function

Active track marker automatically changes at headlands.

- Display, left track marker in use, right track marker not in use (Fig. 46)

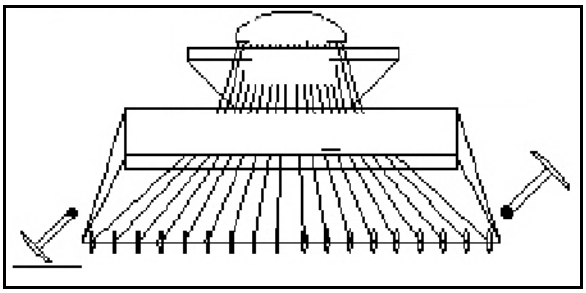

Fig. 46

6.4.3 Blocking the star wheel

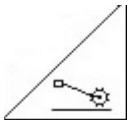

Block star wheel lowering

- **Only soil working, no sowing.**
- **Machines without full dosing: For machine calibration.**

1. Preselect Block star wheel (Fig. 47).

- When the machine is lowered, the star wheel is kept raised.

2. Cancel preselection.

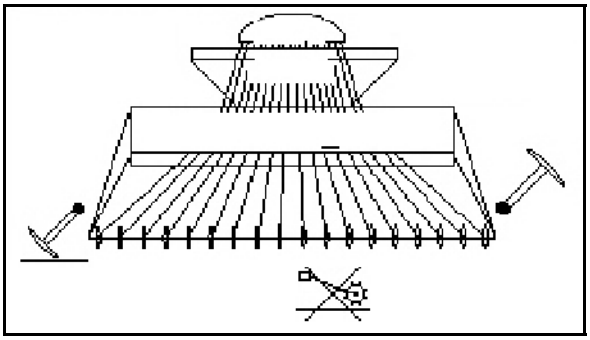

Fig. 47

6.4.4 Switching part widths (Avant with electric full dosing)

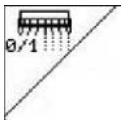	Part width left	Switch on/off
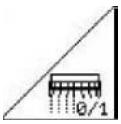	Part width right	Switch on/off

For sowing on half a working width, one part width can be switched off.

Fig. 48: Display: left part width switched off

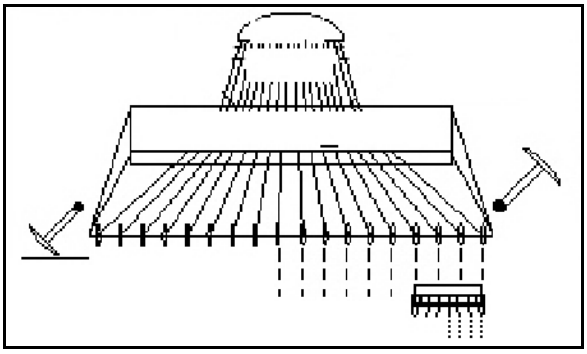

Fig. 48

6.4.5 Electric full dosing

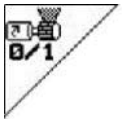

Start / stop predosing

- At the start of sowing: When starting from standstill, activate full dosing in order to ensure sufficient seed discharge over the first metres.
- To fill the seed wheels before calibration.

1. Start predosing.

→ The predosing provides the coulter with seed for a specified running period (Fig. 49).

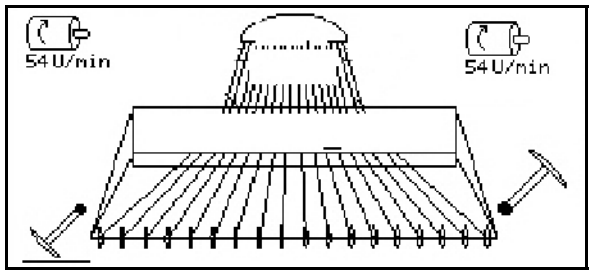

Fig. 49

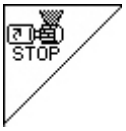

Electric full dosing: Switch dosing unit

In order to prevent unintended starting of the dosing unit, it can be switched off.

This may be useful, as even just minor rotations of the star wheel may cause the dosing unit to start.

Display: Dosing unit switched off (Fig. 50).

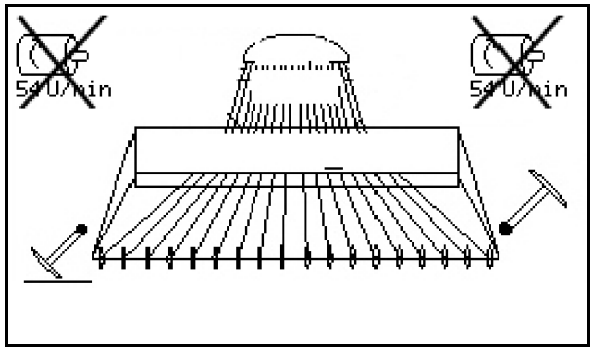

Fig. 50

6.4.6 Coulter pressure and harrow pressure

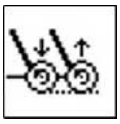

Set increased / reduced coulter and harrow pressure

The hydraulic connection for this function is marked yellow on the Avant and green on the AD-P.

1. Preselect coulter/harrow pressure (Fig. 51).
2. Operate tractor control unit.

→ Set increased pressure.

→ Set reduced pressure.

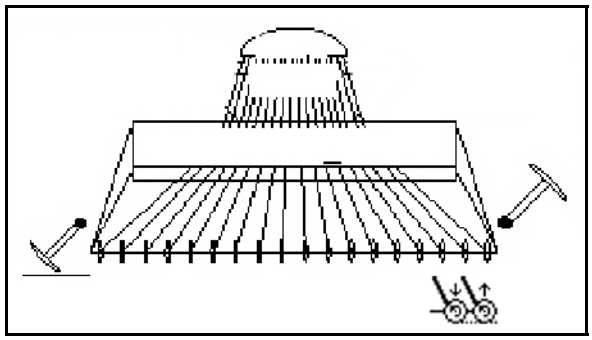

Fig. 51

6.4.7 Folding the machine (Avant 03-2)

Fold the machine in / out

The hydraulic connection for this function is marked green.

Fold in the machine:

1. Raise the machine.
2. Preselect Folding the machine.
3. Operate tractor control unit.

→ The machine folds in.

→ The transportation lock must engage on both sides.

Fold the machine out:

1. Raise the machine.
2. Preselect Folding the machine.
3. Pull the cables of the transportation lock.

→ The Transportation lock is released

4. Operate tractor control unit.

→ The machine folds out.

5. When using, hold the control unit in float position.

WARNING

To move the machine from the transport position to the working position and vice versa, it is essential to refer to the machine operating manual!

6.4.8 Rotary cultivator working depth

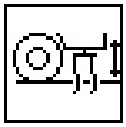	**Adjusting the rotary cultivator working depth**

The hydraulic connection for this function is marked yellow.

The machine is in operational position:

1. Preselect rotary cultivator working depth.
2. Operate tractor control unit.

→ Set desired working depth.

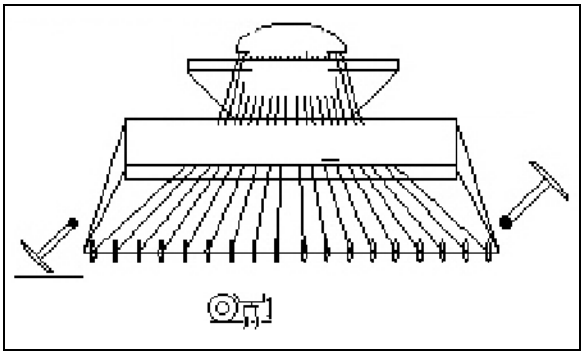

Fig. 52

6.4.9 Coulter lift

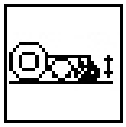	**Raising / lowering the coulter**

The hydraulic connection for this function is marked green.

The machine is in operational position:

1. Preselect coulter lift.
2. Operate tractor control unit.

→ Raise / lower the coulter.

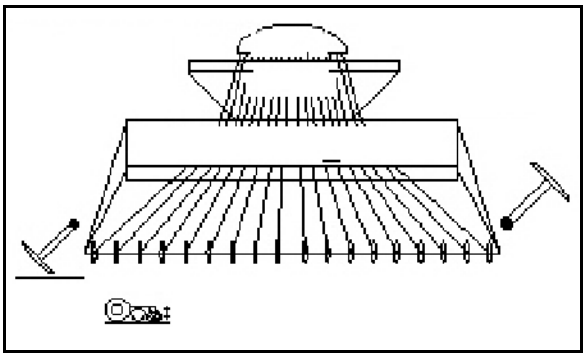

Fig. 53

6.4.10 Front tank lighting (Avant)

	Switching lighting on and off

6.5 Advice on field operation

1. switch **AMATRON+** on.
2. Select the desired job from the main menu and re-check settings.
3. start job
4. select operational menu.
5. set the bout marker to the first run in the field.
6. set tramline bout counter for the first run in the field.

Machines with all-electric full dosing:

- As soon as the star wheel is lowered to operational position, the automatic predosing starts and ensures sufficient dosing over the first metres.
- Terminate predosing prematurely.

7. Start the sowing operation.
   During the sowing operation **AMATRON+** displays the operation menu. From here the sowing operation can be controlled.
8. The determined data will be stored in the started job.

After finishing operation**:**

1. Check job data (if required).
2. Move the machine to the transport position.
3. **AMATRON+** ausschalten.

6.5.1 Key assignment in work menu AD-P with gearbox

Page 1: **Description of the function fields:**

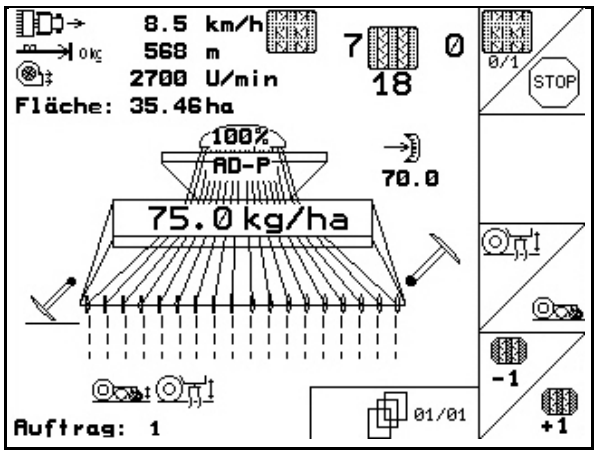

See section

6.4.1
6.4.1
6.4.9 / 6.4.8

6.5.2 Key assignment in work menu AD-P with full dosing

Page 1: **Description of the function fields:**

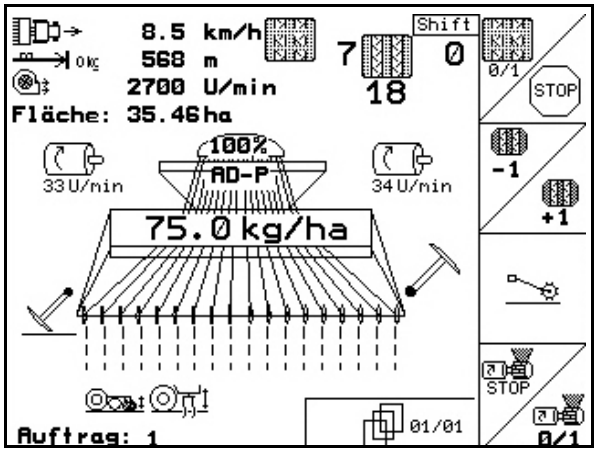

See section

6.4.1
6.4.1
6.4.3
6.4.5

Shift key pressed: **Description of the function fields:**

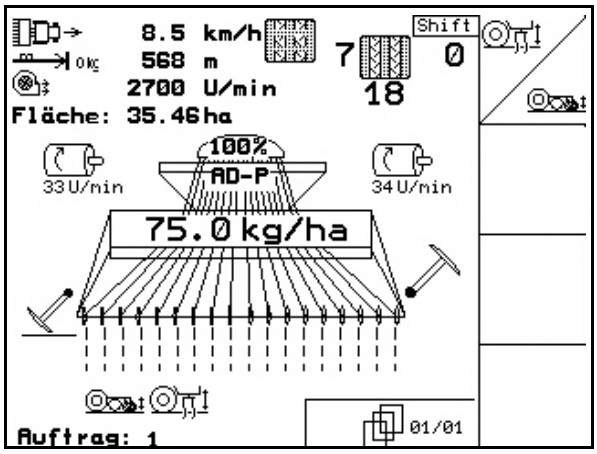

See section

6.4.9 / 6.4.8

6.5.3 Layout menu - joystick AD-P

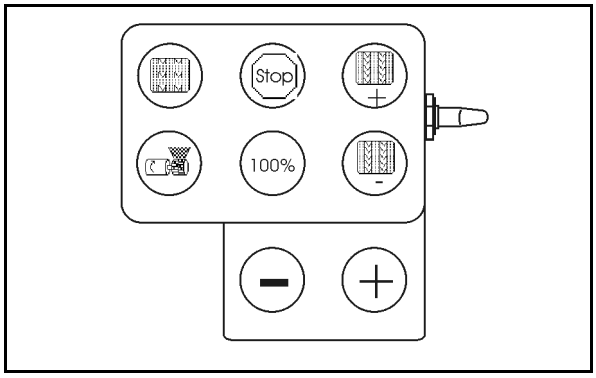

6.5.4 Key assignment in work menu **Avant** with gearbox

page 1: **Description of the function fields:**

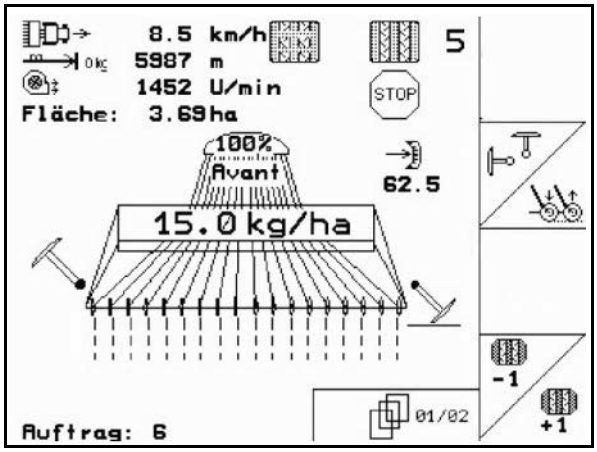

See section

6.4.2 / 6.4.6
6.4.1
6.4.1

page 2: **Description of the function fields:**

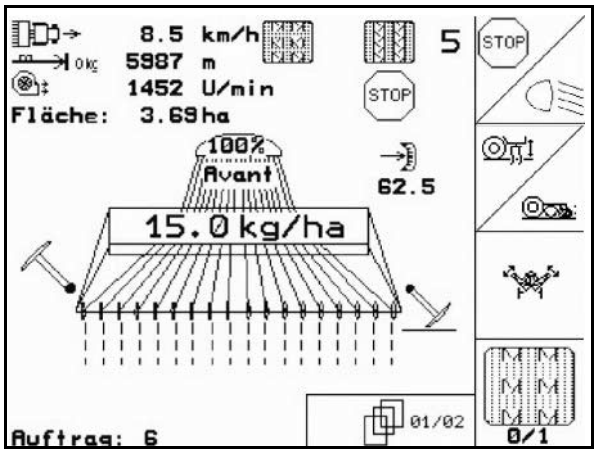

See section

6.4.1 / 6.4.10
6.4.8 / 6.4.9
6.4.7
6.4.1

6.5.5 Key assignment in work menu **Avant** with full dosing

page 1: **Description of the function fields:**

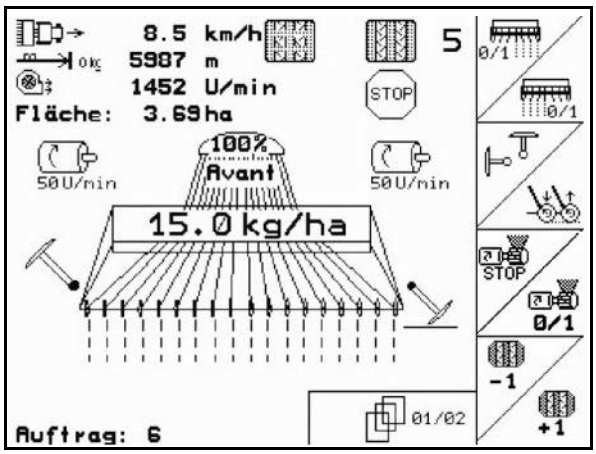

See section
6.4.1
6.4.2 / 6.4.6
6.4.5
6.4.1

page 2: **Description of the function fields:**

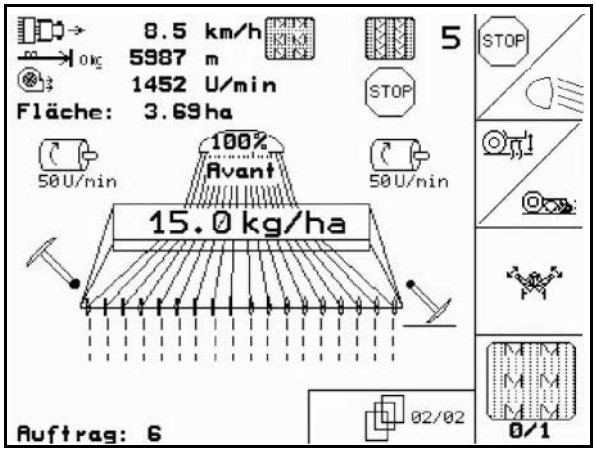

See section
6.4.1 / 6.4.10
6.4.8 / 6.4.9
6.4.7
6.4.1

Layout menu - joystick

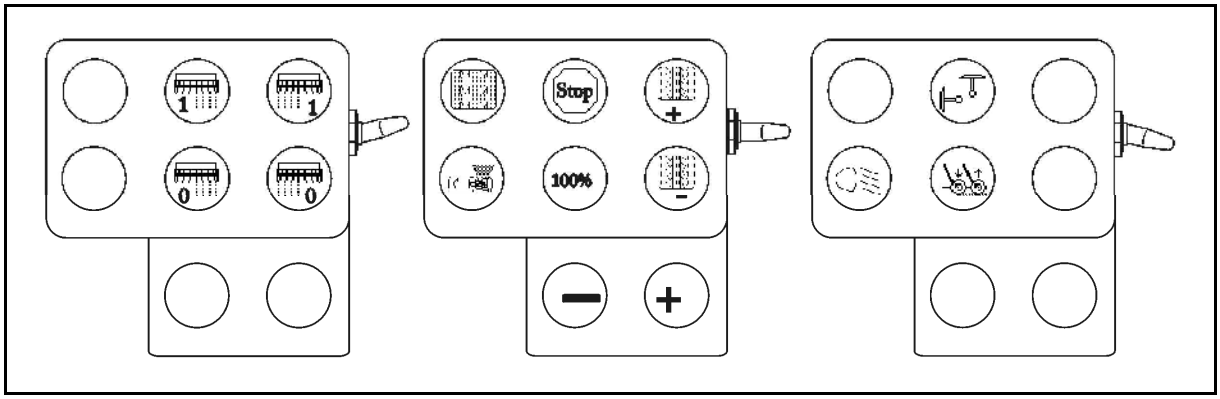

7 Joystick

7.1 Fitting

Attach the joystick (Fig. 54/1) by using 4 bolts within convenient reach in the tractor cab.

Insert the plug of the basic equipment into the 9-pin Sub-D socket of the joystick (Fig. 54/2).

Insert the plug (Fig. 54/3) of the joystick into the mid Sub-D socket of **AMATRON+**.

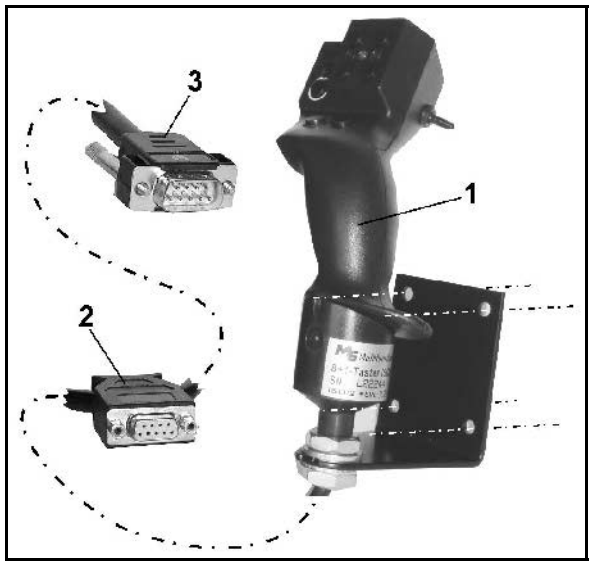

Fig. 54

7.2 Function

The joystick only functions in the operational menu of **AMATRON+** It allows the blind actuation of **AMATRON+** during operation in the field.

For the actuation of **AMATRON+** the joystick (Fig. 55) provides 8 keys (1 – 8). In addition the coverage of the keys can be changed 3 times by the switch (Fig. 56/2).

As standard the switch is in the

- mid position (Fig. 56/A) and can be moved
- upwards (Fig. 56/B) or
- downwards (Fig. 56/C).

The position of the switch is indicated by a LED light (Fig. 56/1).

- LED- indication yellow
- indication red
- LED- indication green

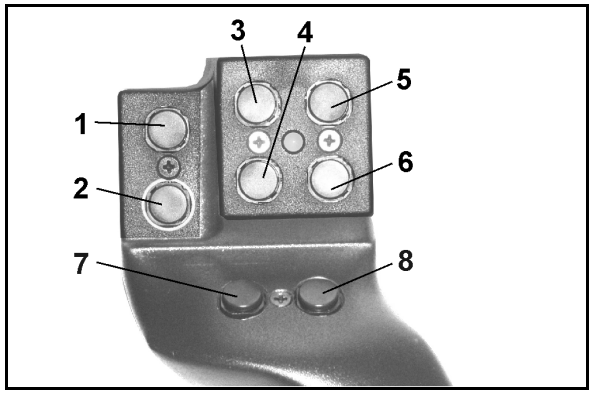

Fig. 55

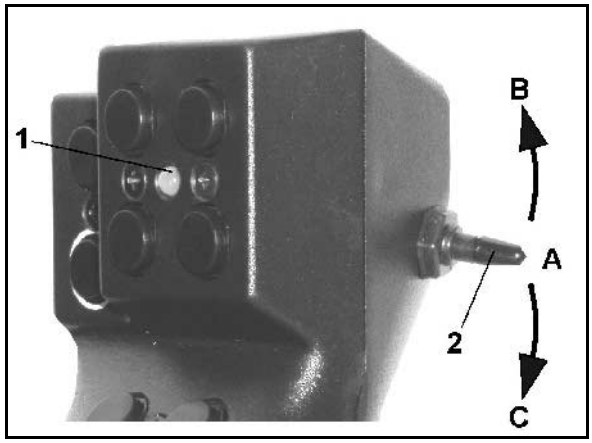

Fig. 56

7.3 Key layout:

	AD-P Vario gearbox	AD-P with full electric metering	AVANT Vario gearbox	AVANT with full electric metering
1				
2				
3				Switching on the left hand part width shut-off
4				Switching off the left hand part width shut-off
5				Switching on the right hand part width shut-off
6				Switching off the right hand part width shut-off
7				
8				
1	Switching on or off intermittent tramline control		Switching on or off intermittent tramline control	
2		start the pre-charger	—	start the pre-charger
3	Over-riding the tramline bout counter (Stop key)		Over-riding the tramline bout counter (Stop key)	
4	Amount 100%		Amount 100%	
5	Advancing the tramline bout counter (+1)		Advancing the tramline bout counter (+1)	
6	Retarding the tramline bout counter (-1)		Retarding the tramline bout counter (-1)	
7	- Amount [%]		- Amount [%]	
8	+ Amount [%]		+ Amount [%]	
1				
2			Switching on and off the hopper fill light	
3			Switching on / off the right hand part width shut-off	
4			Switching the hydraulic valve to actuate the bout markers	
5				
6				
7				
8				

8 Maintenance

8.1 Calibration of gearbox

Not required for machines with full dosing!

Calibrating seed drills which are equipped with the Vario gearbox,

- prior to initial operation if **AMATRON+** has not been factory fitted to the machine, but has been retrofitted.
- in case of a deviation between the display on the terminal and the gearbox scale.

Page 1 01/04 Basic data in the setup menu (Fig. 32)

- Cal. Calibration of gearbox:
  - o via the **AMATRON+** move the gearbox lever back to zero until the LED on the electric seed rate control motor lights up
  - o take the gearbox setting lever to a figure larger than 80 on the scale
  - o Confirm the setting and enter the figure that is indicated, on the scale, by the gearbox setting lever in the now open input block.

> Read the figure off the scale only when directly in front in order to avoid any reading errors!

- After the calibration procedure move the gearbox setting lever to another figure. The indicated value should correspond to the scale value.

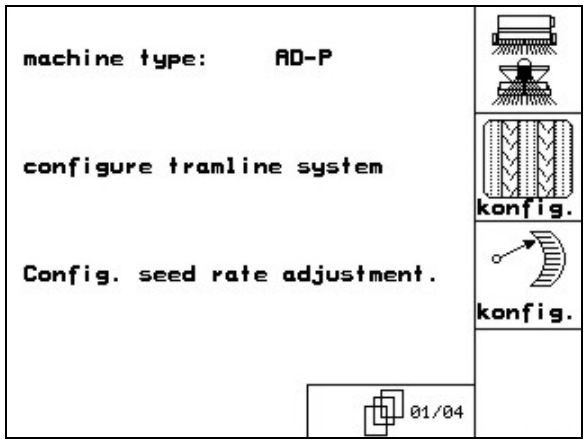

Fig. 57

9 Helpmenu

The help menu (Fig. 58) is opened from the main menu:

Help menu:

- 1 help on operation
- 2 help on fault messages
- 3 help on tramline creation.

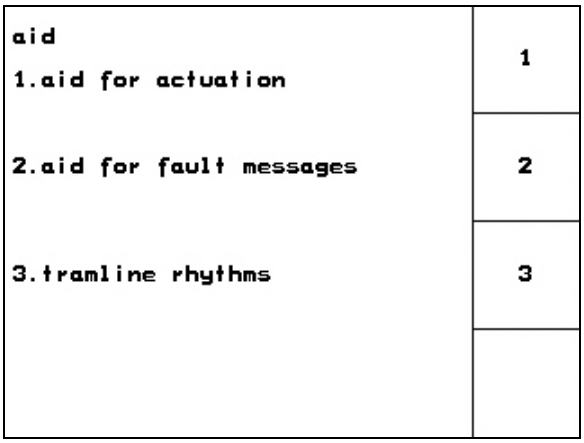

Fig. 58

10 Malfunction

10.1 Alarm

Warning message:

A warning message (Fig. 59) appears at the bottom of the display and the audible alarm sounds three times. Remedy fault as soon as possible.

Example:

- Warning: Seed hopper contents low.

→ Remedy: Refill seed hopper.

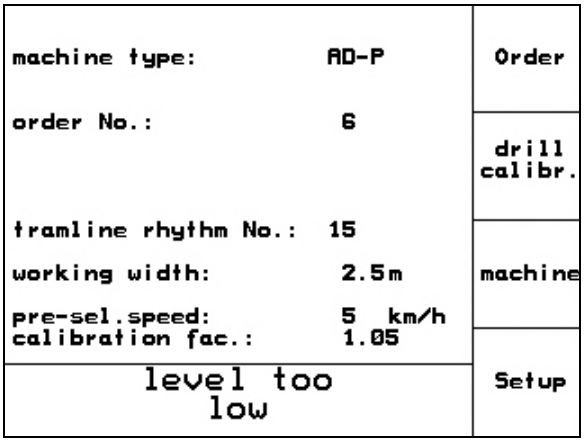

Fig. 59

Error message:

The error message (Fig. 60) appears in the middle of the display and the audible alarm sounds.

1. Read alarm message on the display.
2. Recall the help text.
3. Confirm the error message.

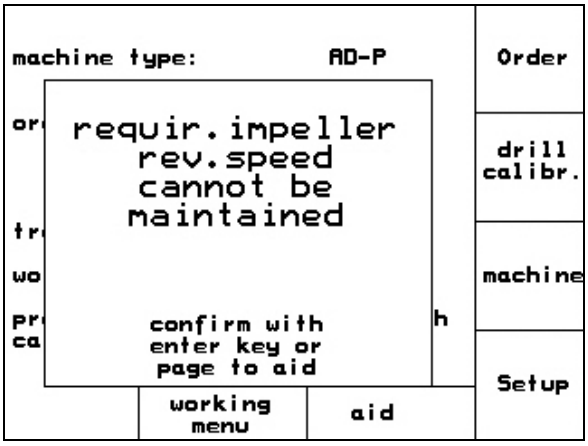

Fig. 60

10.2 Failure of the forward speed sensor

With the failure of the forward speed sensor (Imp./100m), which is attached to the gearbox or with the electric drive option on the land wheel, operation can be continued after the input of a simulated forward speed.

The failure of the forward speed sensor is indicated by the "seed drill lifted" mode on the display („Drille angehoben“).

In order to avoid possible sowing errors, exchange the defective sensor as soon as possible.

However, if a new sensor is not available in the short term, the sowing operation can continue as follows:

1. Remove the signal cable from the tractor basic equipment.
2. Setup Actuate from the main menu.
3. Esc Confirm change of menu.
4. km/h sim. Enter a simulated speed.
5. Maintain the simulated speed as you continue spreading.

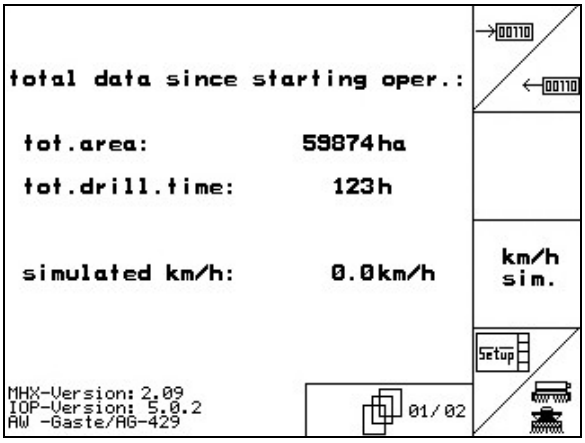

Fig. 61

> As soon as impulses are sensed from the forward speed sensor the computer automatically changes over to the actual speed from the forward speed sensor..

AMAZONEN-WERKE

H. DREYER GmbH & Co. KG

P. O. Box 51
D-49202 Hasbergen-Gaste
Germany

Tel.: + 49 (0) 5405 501-0
Telefax: + 49 (0) 5405 501-234
e-mail: amazone@amazone.de
http:// www.amazone.de

Branch factories:
D-27794 Hude • D-04249 Leipzig • F-57602 Forbach
Subsidiaries: in England and France

Factories for mineral fertiliser spreaders, field sprayers, seed drills, soil cultivation equipment, multi purpose storage halls and groundcare municipal machinery